名词解释 (1)

(1) CMOS Complementary Metal Oxide Semiconductor 互补金属氧化物半导体

(2) DSP Digital Signal Processor 数字信号处理器

(3) FPGA Field Programmable Gate Array 现场可编程逻辑门阵列

(4) ASIC Application Specific Integrated Circuit 专用集成电路

(5) CVD Chemical Vapor Deposition 气相沉积法

(6) SOI Silicon on Insulator 绝缘体上硅

(7) DRC/LVS Design Rule Check 设计规则检测
/Layout versus Schematics 验证版图和逻辑图

(8) C_{GS} / C_{BD} gate-source capacitance/ Bulk drain capacitance 栅-源/衬底-漏电容

(9) Cascode/Cascade (中文) 共源共栅(垂直级联)/水平级联

(10) BGR Bandgap Voltage Reference 带隙基准电压

(11) PTAT Proportional to Absolute Temperature 与绝对温度成正比

(12) ZTC Zero Temperature Coefficient 零温度系数

(13) OTA operational transconductance amplifier 跨导运算放大器

(14) SiP System In a Package 系统级封装

(15) ISSCC/JSSC IEEE International Solid-State Circuits Conference 国际固态电路会议/ IEEE Journal of Solid-State Circuits IEEE固态电路学报

SoC/SiP/ASIC/CPU/MCU/Chiplet etc.

SoC

System on Chip

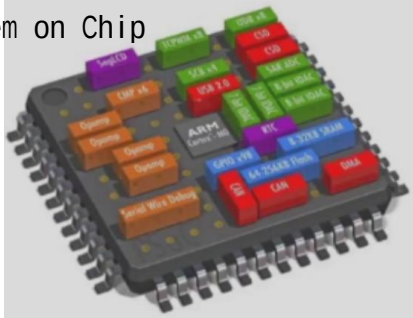

SiP System in a Package

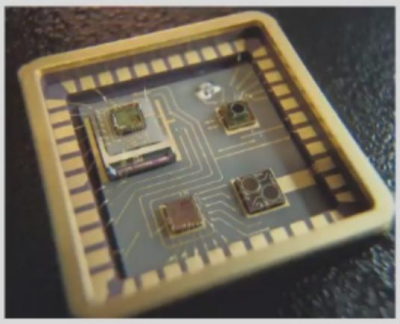

System on PCB

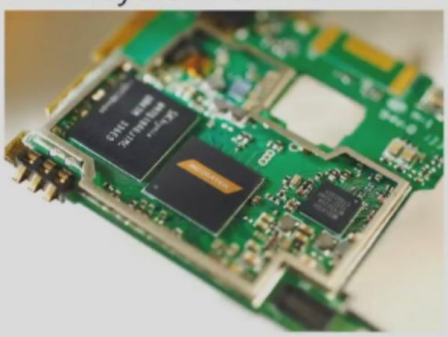

Chiplet

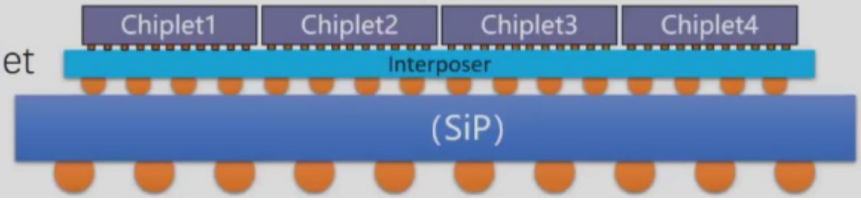

SoC includes at least one processor

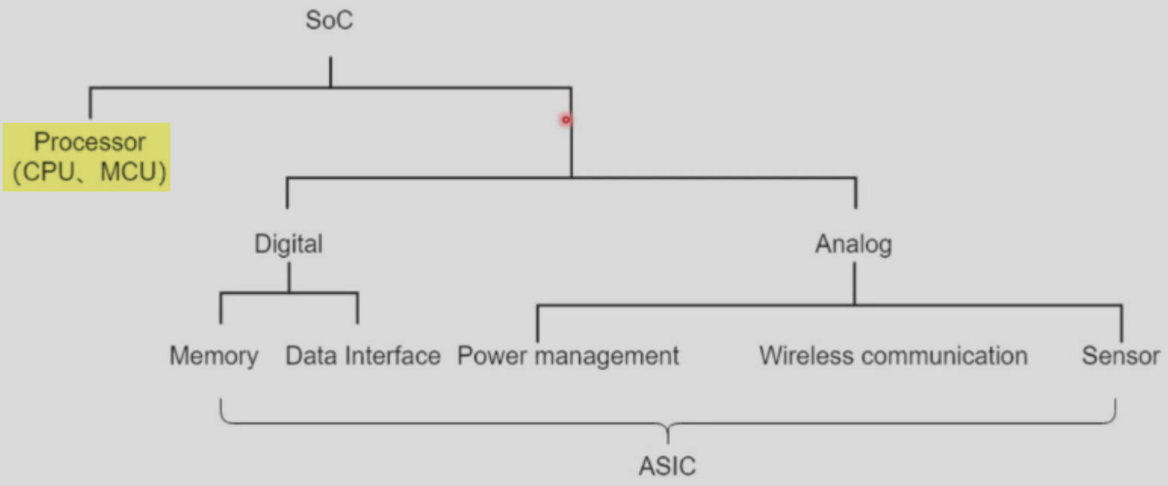

ASIC vs. FPGA

- (Digital) ASIC vs FPGA

	ASIC	FPGA
Application Specified	Yes	No
Flexibility	Low	High
Price Cost	Low	High
Power Consumption	Low	High
Speed	High	Medium
Area	Small	Large

DSP vs CPU (ASIC vs FPGA)

- DSP vs CPU

	DSP	CPU
Application Specified	Yes	No
Flexibility	Medium	High
Price Cost	Medium	High
Power Consumption	Medium	High
Speed	High	Medium
Area	Medium	Large

SOI/Finfet/advanced technology node

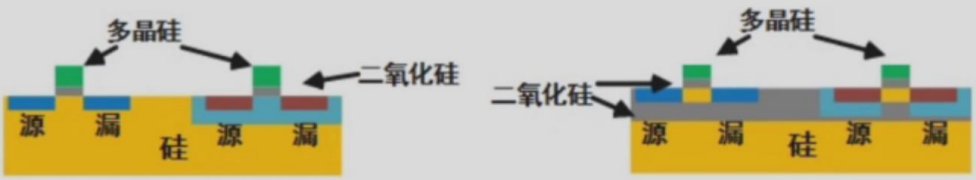

SOI主要优势

- 漏电流小
- 衬底噪声小
- 寄生电容小->速度快

SOI/Finfet/advanced technology node

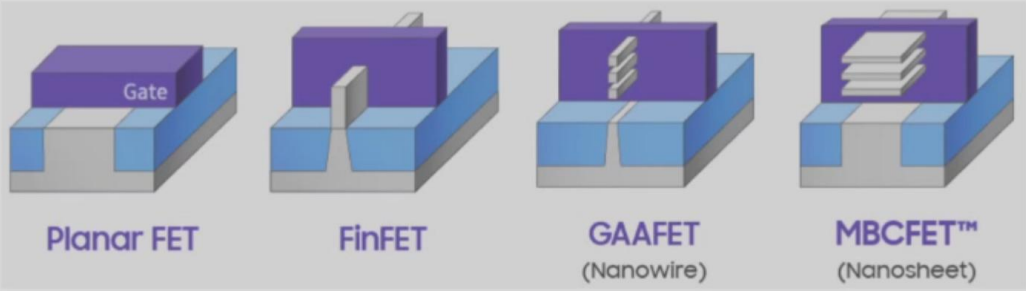

FinFET主要优势

- 短沟道时夹断控制能力强
- 实现将工艺节点推进至<20nm

GAAfet (gate-all-around FET), MBCfet (multi-bridge-channels FET)

填空 (1)

(1) Moore's Law refers to Gordon Moore's perception that the number of _transistors_ (what) on a microchip _doubles_ (change how many times) every 18-24 month, though the cost of computers is halved.

(2) _Analog_ (Analog/Digital) IC design differs greatly from digital IC design. Where _digital_ (analog/digital) IC design is mostly done at an abstracted level with HDL (Hardware Description Language), _analog_ (analog/digital) IC design generally involves more personalized focus into each transistor, determining the sizing of each.

(3) Modern CMOS technologies involve roughly the following operations: (1) Wafer Preparation: produce the proper type of substrate; (2) _ lithography : (step name) precisely define each region by light; (3) Oxidation, deposition and _ion_ (what) implantation: add materials to the wafer; (4) Etching: remove materials from the wafer

(4) The type of transistors in the following figure.1 is _FinFET_ (Planar MOS/FinFET), which is invented for _advanced_ (conventional/advanced) technology node like 14nm CMOS.

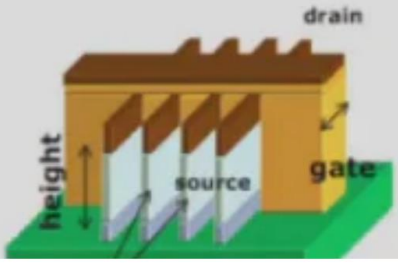

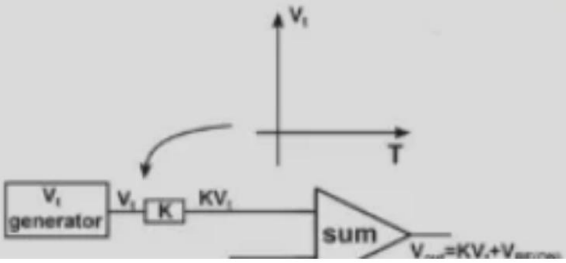

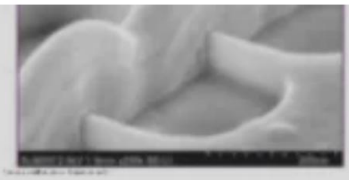

Fig. 1

Fig. 2

(5) An NMOS transistor with a _ higher _ (lower/higher) Vds tends to work in saturation region. In saturation region, it usually has a _higher_ (higher/lower) small signal resistance (r_o) compared to linear region.

(6) An NMOS transistor (working at saturation region) at FF corner has a _lower_ (lower/higher) threshold voltage (Vth) than at TT corner. The same transistor at SS corner has a _lower_ (lower/higher) trans-conductance (gm) than at TT corner.

(7) An NMOS transistor working as a switch has _lower_ (higher/lower) resistance than a PMOS based switch. That is the reason why a transmission gate (consisting of a PMOS and an NMOS transistor) use a larger W/L ratio for _ PMOS _ (NMOS/PMOS).

(8) The Vbe in the following figure has a _negative_ (positive/negative) temperature coefficient(TC), the KVt has a _positive_ (positive/negative) TC. A bandgap reference provides a stable output voltage at both temperature and _voltage_ (what) range.

Bandgap reference

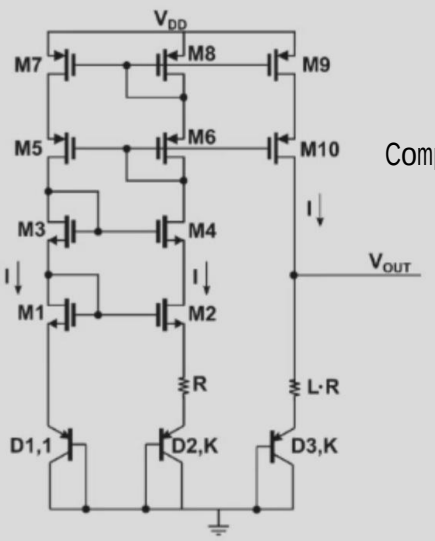

- **PTAT: 两个Vbe的差**
- **CTAT: Vbe本身**

Complementary to Absolute Temperature

$$V_{ref} = V_{EB3} + I \times LR$$
$$= V_{EB3} + \frac{V_t \ln K}{R} \times LR$$
$$= V_{EB3} + L V_t \ln K$$

CTAT + PTAT = ZTC

FF:NMOS的Vth小，gm大

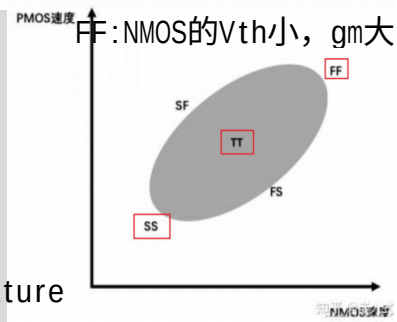

- TT: Typical N Typical P
- FF: Fast N Fast P
- SS: Slow N Slow P
- FS: Fast N Slow P
- SF: Slow N Fast P

问答题 1

(a) Give the corresponding circuits schematics and mark the W/L sizes of each transistor. Assume λ=0.4μm.

M1,M4,M5:2/3 M2:5/1 M3:5/1

(2)把M1和M2都分为两个宽度为原来一半的晶体管，沿对角放置且并联连接

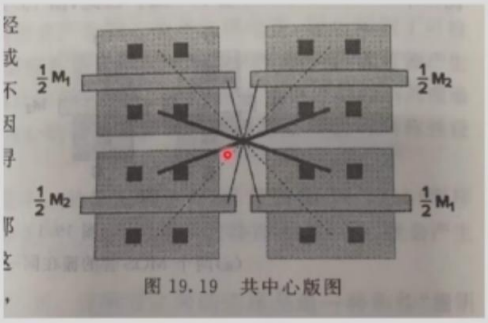

图 19.19 共中心版图

(b) To achieve better matching of the input pair (M2 and M3), draw an alternative layout configuration. (by using multiple transistors with smaller W/L)

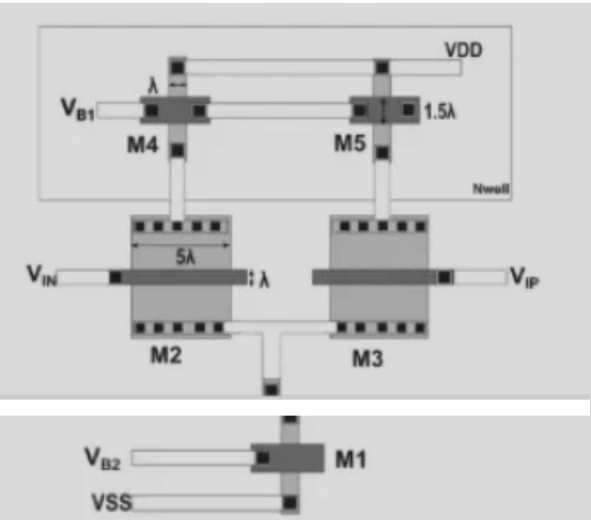

Answer:

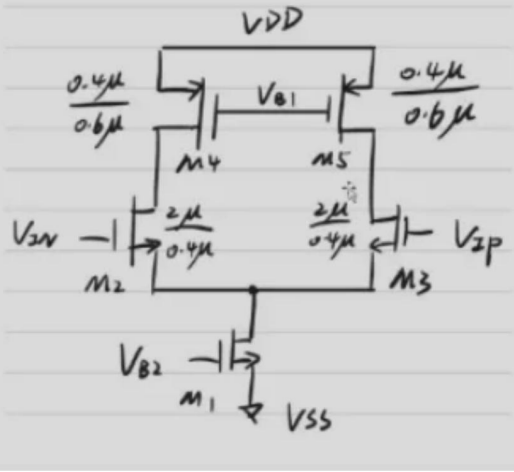

(2) An NMOS device is used within the topology shown in the following figure. The input Vin is 2 V. The current source draws a constant current of 50 μA. R is a variable resistor between 10kΩ and 30 kΩ. Transistor M1 has following transistor parameters: $k' = 110\mu A/V^2$, $V_{TH} = 0.7V$, $V_{DSSAT} = 0.6V$, and has a W/L = 2.0μ/0.4. For simplicity, the body effect and channel length modulation can be neglected, i.e λ=0, γ=0. (8 pts)

a) When R =12kΩ find the operation region, V_D and V_S.

b) For the case of R = 12kΩ, would V_S increase or decrease if λ ≠ 0 (when there is channel length effect)? and explain why.

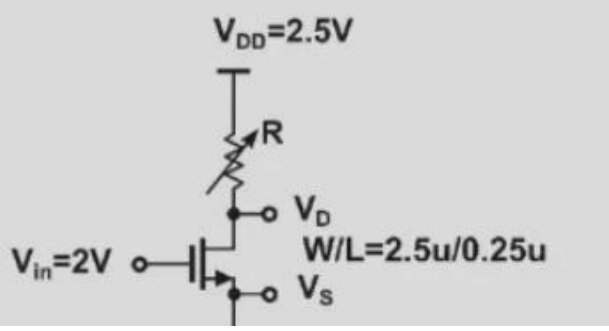

问答题 2

(a) When R =12kΩ find the operation region, VD and VS.?

When R =12K, VD=VDD-IR=2.5-50×10^{-6}×1.2X10^4=2.5-0.6=1.9V.

Assume the device is in saturation $I_D = 0.5 * k_n' \frac{W}{L}(V_{GS} - V_{TH})^2 = 50uA$

find $V_{GS} - V_{TH} = 0.386V$, $V_{GS} = 0.386 + 0.7V = 1.086V$,

$V_S = 0.914V$.

The device is in the saturation.

(b) Increase. V_D is fixed due to constant current.$1 + \lambda V_{DS}$ form would try to increase the current more then 50uA, thus V_{GS} needs to reduce by increase V_S.

(3) There are two cascode current mirror shown in the following figures (10 pts)

(a) Design M3 and M4 of (a) so that the output characteristics are identical to the circuit shown in Fig. (b). It is desired that IOUT is ideally 10uA.

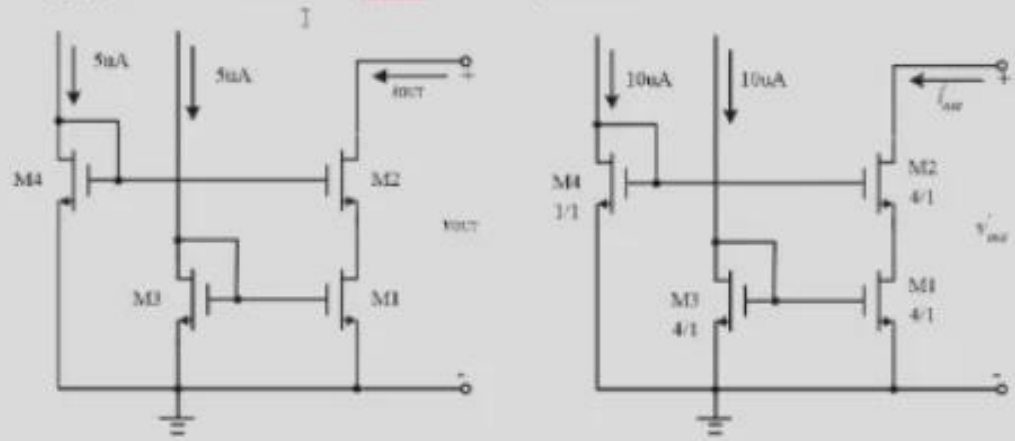

(a) (b)

问答题 3

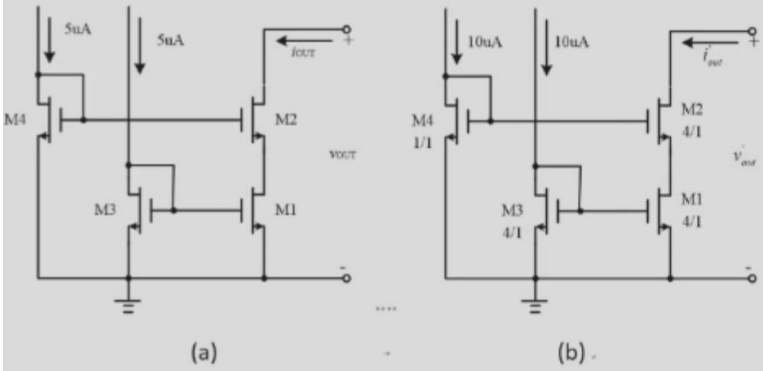

(a) M4 0.5/1
M3 2/1

(b) Vgs3-Vth
Or Von

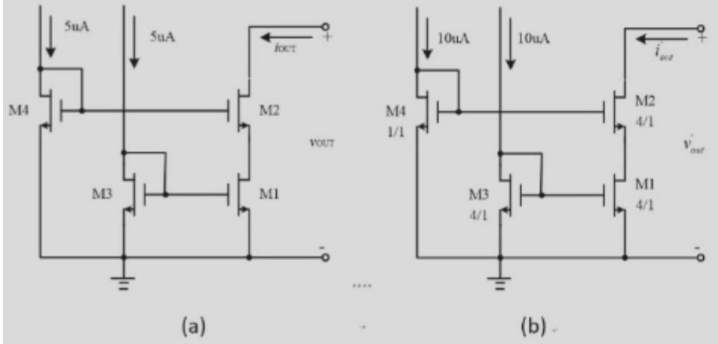

- Rout = rds1 * (gm2*rds2)
- rds1 = 1/λI = 200kohm
- rds2 = 1/λI = 200kohm
- gm2 = $(2*I*kn*W/L)^{0.5}$
  = 231uS

Rout = 9.24Mohm

M2本征增益： = 46.2 >>1

Standard Cascode Current Sink

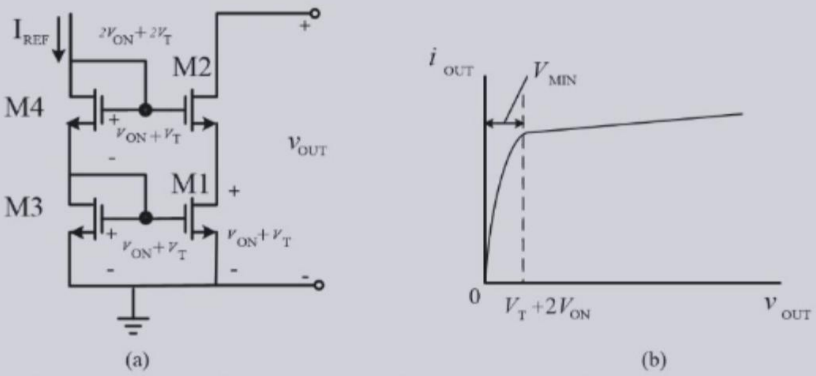

(a) standard cascode current sink; (b) output characteristics of circuit in (a)

$v_D \geq V_G - V_T$ $\qquad$ $V_{D2}(\min) = V_{MIN} = V_T + 2V_{ON}$

High-Swing Cascode

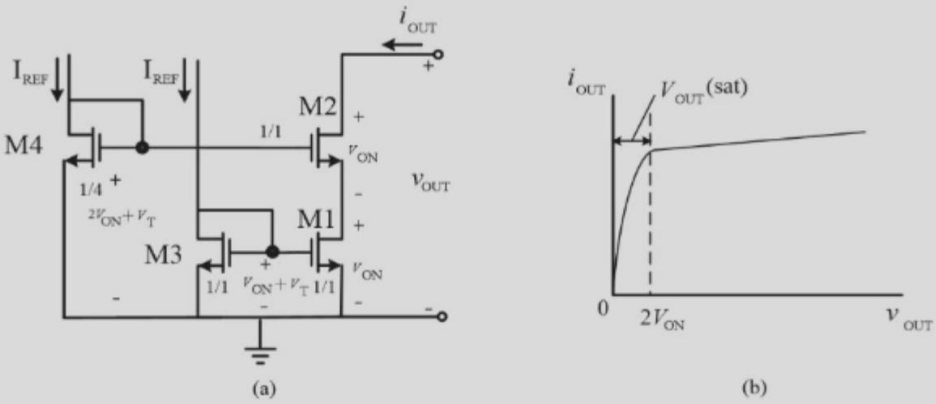

(a) High-swing cascode; (b) Output characteristics of circuit in (a)

High-Swing Cascode

$$I_{REF} = i_{D3} = i_{D4}$$

$$\frac{W_1}{L_1} = \frac{W_3}{L_3} \Rightarrow i_{D1} = i_{D3}$$

$$\therefore i_{D1} = i_{D4}$$

$$\frac{W_1}{L_1}(V_{ON1})^2 = \frac{W_4}{L_4}(V_{ON4})^2$$

$$\frac{\left(\frac{W_1}{L_1}\right)}{\left(\frac{W_4}{L_4}\right)} = \frac{(V_{ON4})^2}{(V_{ON1})^2} \qquad \frac{\left(\frac{W_1}{L_1}\right)}{\left(\frac{W_4}{L_4}\right)} = 4$$

$$V_{ON4} = 2V_{ON1}$$

$$V_{G4} = V_{TH} + V_{ON4} = V_{TH} + 2V_{ON1}$$

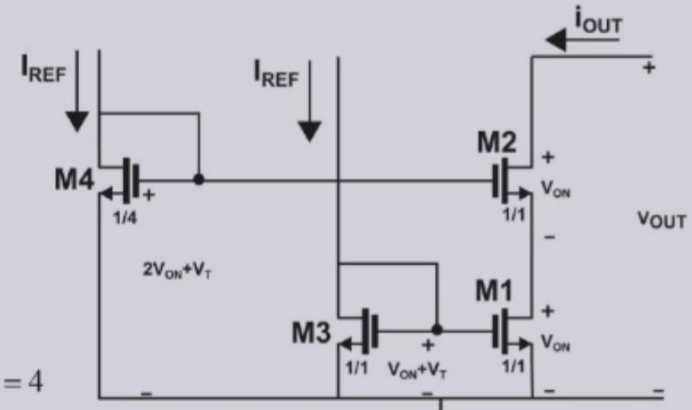

$$v_D \geq v_G - V_{TH}$$

$$V_{D2}(\min) = V_{G2} - V_{TH}$$

$$V_{D2}(\min) = V_{MIN} = 2V_{ON}$$

四种基本结构: Cascode

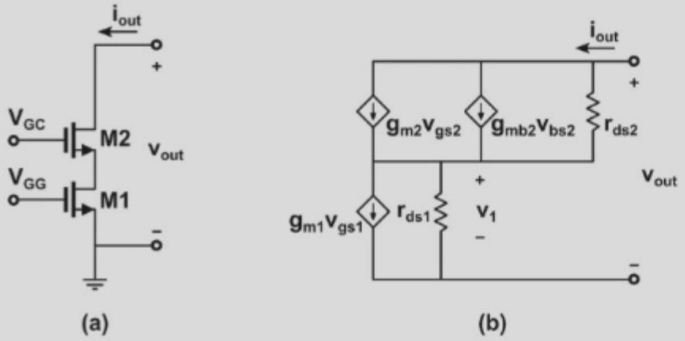

对于一个NMOS 结构的Cascode

输出电阻等于
下面管子的r_{ds} 放大了
上面管子的本征增益倍

注意:
1. 下面不一定是管子，也可以是电阻，只是被放大的为R
2. 后面所说的Source follower 输出电阻也是一样的。因为计算输出电阻时，默认输入接地

$$r_{out} \cong \left(g_{m2} \cdot r_{ds2}\right) r_{ds1}$$

四种基本结构: Common source

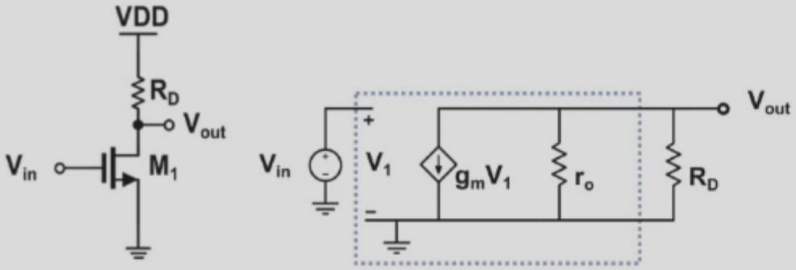

对于一个NMOS型 Common source

直流电压增益等于 （负的）
输入管的g_m 乘以
输出点的等效电阻
这个电阻通常是到地r//到电源r

注意:
1. 上面不一定是电阻，也可以是管子，结果不变，只是不同的东西作为到电源r

$$V_{out} = -g_m V_1 \left(r_O \| R_D\right)$$

$$A_v = -g_m \left(r_O \| R_D\right) = -g_m \frac{r_O R_D}{r_O + R_D}$$

$$= -g_m R_{out}$$

四种基本结构: Common drain/SF

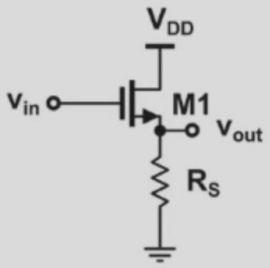

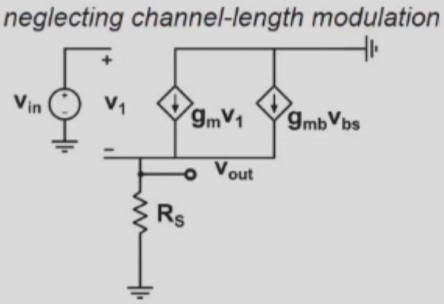

对于一个NMOS型 Source follower

等效G_m等于
输入管的g_m 被削弱了
1+ (g_m + g_{mb}) 乘以源极电阻R

因此，直流电压增益等于
这个等效G_m个乘以源极电阻R

注意:
1. 需考虑衬底偏置效应（0.1~0.2 g_m ）
2. 输出电阻和Cascode计算方法相同
3. 源极电阻也可以是管子

$$A_v = \frac{\partial V_{out}}{\partial V_{in}} = \frac{g_m R_S}{1+(g_m+g_{mb})R_S}$$

四种基本结构: Common gate

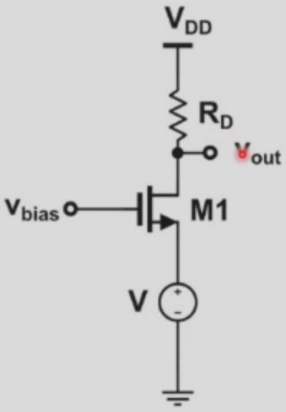

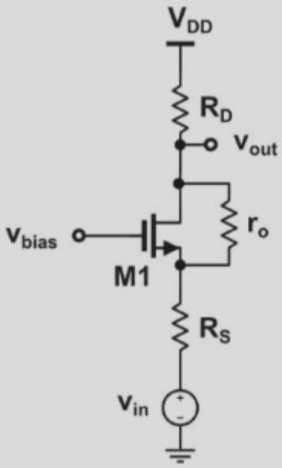

对于一个NMOS型 Common gate （CG）

这是一个电流传输器，输入端在Source
Source输入的电流等于
Drain输出的电流

而source输入多少电流，由CG的输入电阻和
接在source上的电流源内阻分流比来决定

输入电阻是1/ g_m

注意:
1. 输出电阻和Cascode计算方法相同
2. 源极可以是电压源也可以是电流源

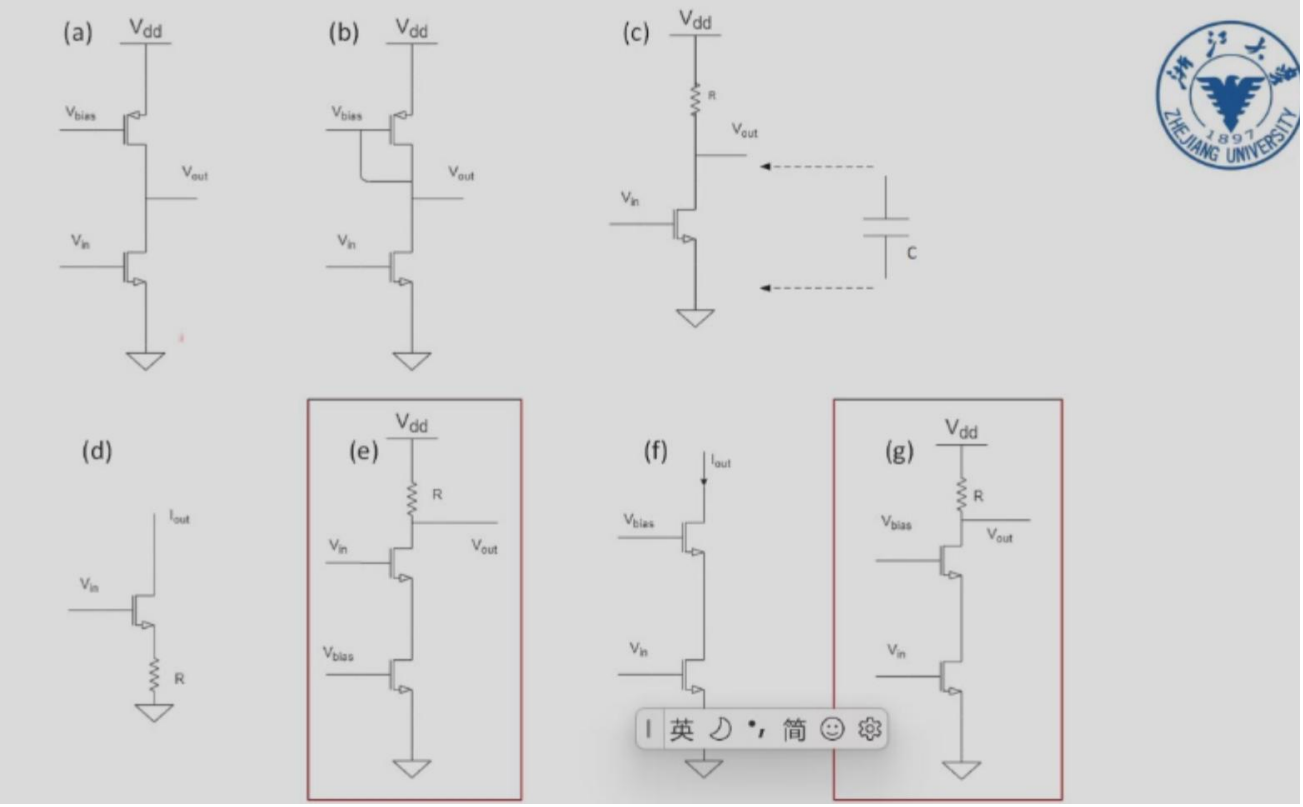
(a)
Vdd
Vbias
Vout
Vin
(b)
Vdd
Vbias
Vout
Vin
(c)
Vdd
R
Vout
Vin
C
(d)
Iout
Vin
R
(e)
Vdd
R
Vin
Vout
Vbias
(f)
Iout
Vbias
Vin
(g)
Vdd
R
Vbias
Vout
Vin