期末复习

2024. 12.23

考试题型

- 名词解释：6*2分 = 12 分 （IC CMOS PMOS NMOS …）
- 选择：11*2分 = 22 分
- 解答题：5*X分 = 66 分 （Analog 2, Digital 2, Layout 1）

- 模拟小信号模型与计算
- 带隙基准温度系数相关计算 必考
- 看版图，从版图画出 Schematic 或反之
- 从布尔函数到数字逻辑门
- 多输入逻辑门延时计算

实际考题可能有部分变化

主要内容（1）

- **Technology scaling down (digital driven) with Moore's Law**
  But in recent decade more SoC, SiP and Chiplets

基于器件　　基于门级电路

- **Analog & Digital Design Flow (Transistor level vs. Behavior-RTL)**
  what is the main difference between analog and digital design

数字：工艺尺寸微缩收益非常大

- **Analog vs. Digital with technology scaling down**
  what is the main difference between analog and digital vs scaling down

主要内容（2）

- I/V curve and operation region of MOSFET

$$I_D = \mu_n C_{OX} \frac{W}{L}\left[(V_{GS} - V_{TH})V_{DS} - \frac{1}{2}V_{DS}^2\right]$$

$$I_D = \frac{1}{2}\mu_n C_{OX} \frac{W}{L}(V_{GS} - V_{TH})^2$$

- Diode and its capacitance, mainly used as ESD protection in ICs

$$C_j = \frac{C_{j0}}{(1 - V_D/\phi_0)^m}$$

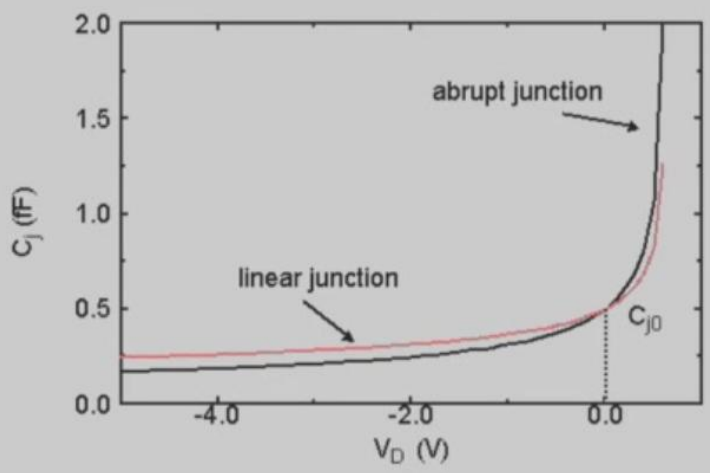

与正向电压成正比

主要内容（3）

饱和区

- Body Effect & Channel Length Modulation & Weak inversion

$$V_{TH} = V_{TH0} + \gamma\left(\sqrt{|2\Phi_F + V_{SB}|} - \sqrt{|2\Phi_F|}\right)$$ B、S短接时，阈值电压最低

$$I_D \approx \frac{1}{2}\mu_n C_{ox}\frac{W}{L}(V_{GS} - V_{TH})^2(1 + \lambda V_{DS})$$

$$I_D = I_0 \exp\frac{V_{GS}}{\varsigma V_T}$$

- Small Signal Model

管子是一个压控电流源，主要由Vgs控制，受到Vds的影响

Single-Page MOSFET Model

$$I_{DS} = K'_n \frac{W}{L} (V_{GS}-V_T)^2$$

$V_{GS}-V_T \approx 0.2$ V

$K'_n \approx 100\ \mu A/V^2$
$K'_p \approx 40\ \mu A/V^2$

$$K'_n = \frac{1}{2}\mu_n C_{ox}$$

$$g_m = 2K'_n \frac{W}{L} (V_{GS}-V_T) = 2\sqrt{K'_n \frac{W}{L} I_{DS}} = \frac{2\, I_{DS}}{V_{GS}-V_T}$$

$$r_{DS} = r_o = \frac{V_E L}{I_{DS}}$$

$V_{En} \approx 5$ V/μmL $V_{Ep} \approx 8$ V/μmL

$v_{sat} = 10^7$ cm/s

$$r_O = \frac{1}{I_D \lambda}$$

$$f_T = \frac{1}{2\pi}\frac{3}{2n}\frac{\mu}{L^2}(V_{GS}-V_T) \quad \text{or now} \approx \frac{v_{sat}}{2\pi L}$$

$$f_T = \frac{g_m}{2\pi C_{GS}}$$

Willy Sansen 10-05 0170

主要内容（4）

- PVT variation of parameters: (+) R, g_m, speed… (-) Vth, Vbe…
- Process Steps:

1. Wafer preparation
2. **Lithography** (defines the geometry)
3. Oxidation,
4. Diffusion, Ion immolations, Deposition
5. Etching **(2-5)不断循环**
6. Planarization

- DRC (minimum distance, matching etc.) LVS (Layout vs Schematic)

主要内容（5）

- Layout: from Layout to schematic
- Matching: **identical cells** are good for matching
  (用多个一样的-> 电流镜)

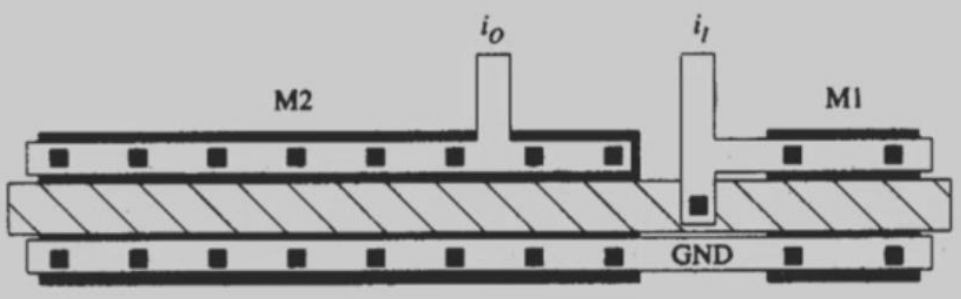

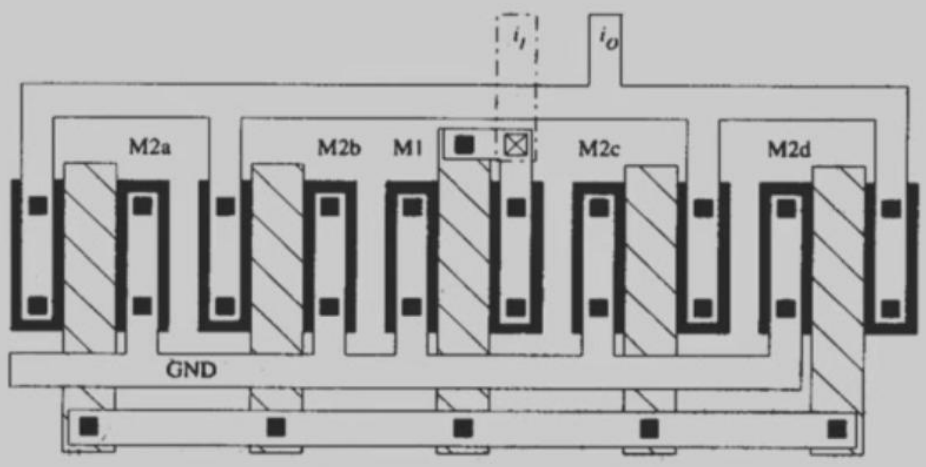

- Two dimensional matching (用多个一样的+交差摆放-> 差分对)

主要内容（6）

$$r_{ON} = \left.\frac{1}{\partial i_D / \partial v_{DS}}\right|_Q = \frac{L}{K'W(V_{GS} - V_{TH} - V_{DS})}$$

- Switch (charge feedthrough) in linear:
- Active resistor (diode connected transistor) in saturation (1/gm)
- Current mirror: 一个由二极管连接的管子控制栅极的管子：rds
- Cascode current mirror：输出阻抗被提升至 rds 的 （gm*rds）倍 gm*rds 为上面管子的本征增益，PMOS则相反，为下面管子
- 一些电压关系计算，压低最小输出电压

主要内容（7）

- **Common-Source Stage**

  - Inverse Gain -> I-V curve （why $R_D < r_o$ of transistor）

  - 增益等于输入管gm*输出节点的阻抗（上下并联）

- **Source Follower**

  $Gm = gm/(1+gm^* R_S)$

  With high output resistance
  Similar to Cascode

- **Common-Gate Stage**

  Current input with (1/gm) -> Iout = Iin

  With low input resistance: 1/gm

主要内容（8）

- **Bandgap reference (ZTC = PTAT+CTAT)**

$$V_{REF} = V_{BE} + KV_t$$

$$V_{ref} = V_{EB3} + I \times LR$$

$$= V_{EB3} + \frac{V_t \ln K}{R} \times LR$$

$$= V_{EB3} + LV_t \ln K$$

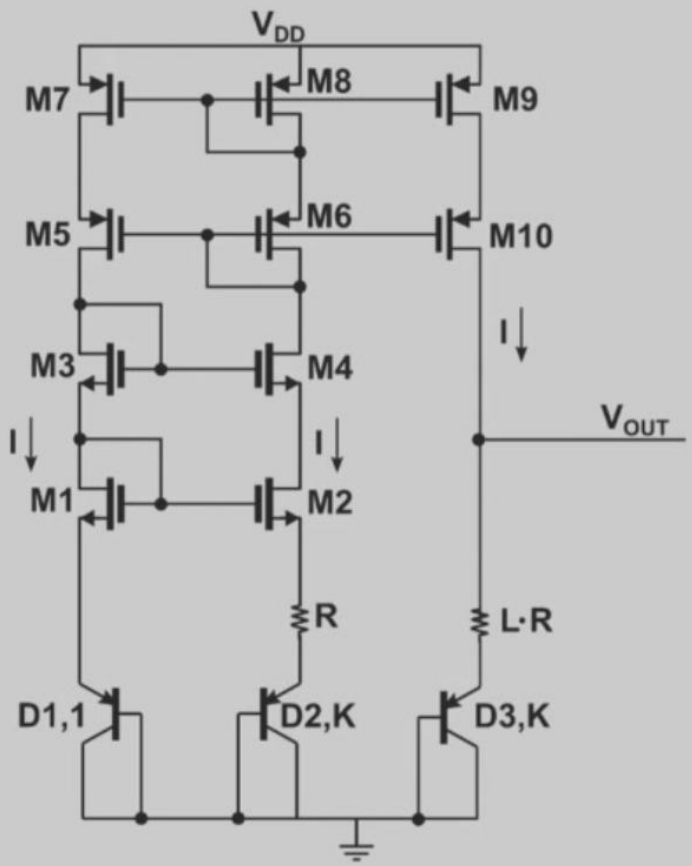

主要内容（9）

- **A differential signal is better in PSRR/Interference**
- **Virtual ground at node P with fixed I_{SS}**
- **V_{incm} Range:** $V_{GS1} + (V_{GS3} - V_{TH3}) \le V_{in,CM} \le V_{DD} - R_D \frac{I_{SS}}{2} + V_{TH3}$
- **DM small signal gain: $-G_m * R_{out}$**

  增益等于输入管gm*输出节点的阻抗（上下并联）
- **CM small signal gain: $-(g_m/1+g_m r_{ss}) * R_{out}$**
- **OTA with five transistors**

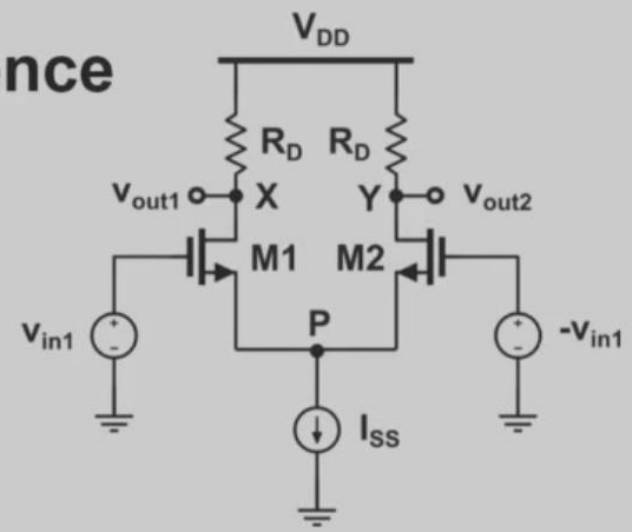

主要内容（9）运算放大器

- Ideal Opamp
- **DC gain** and dominant pole of single stage, **telescopic and folded-cascade amplifier**
- DC gain and two poles of two stage amplifier, after miller compensation
- Input and output range

  (every transistor in saturation)
- Speed and Slew rate

  (small signal and large signal behavior)

主要内容（10）Elmore delay

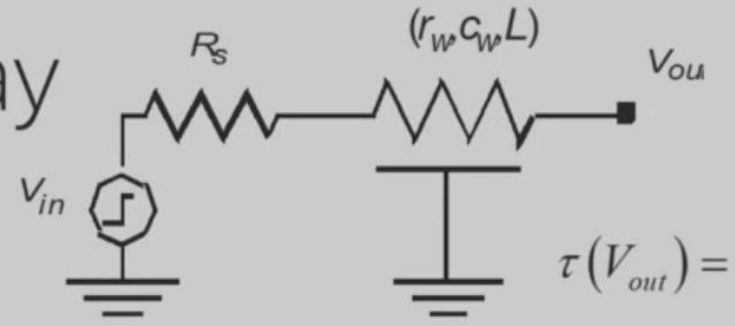

$$\tau(V_{out}) = \frac{rcL^2}{2}$$

- Wire parasitics
  - Capacitance, Resistance, Inductance
- Wire models (lumped, distributed)

$$\tau_D = R_s C_w + \frac{R_w C_w}{2} = R_s C_w + 0.5 r_w c_w L^2$$

$$t_p = 0.69 R_s C_w + 0.38 R_w C_w$$

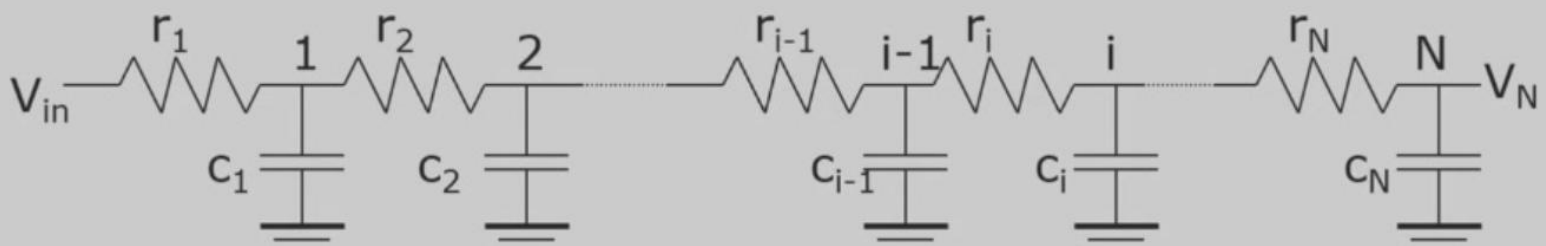

$$\tau_{Di} = c_1 r_1 + c_2(r_1 + r_2) + \cdots + c_i(r_1 + r_2 + \cdots + r_i)$$

$$\tau_{Di} = c_1 r_{eq} + 2c_2 r_{eq} + 3c_3 r_{eq} + \cdots + i c_i r_{eq}$$

主要内容（11）Elmore delay of gates

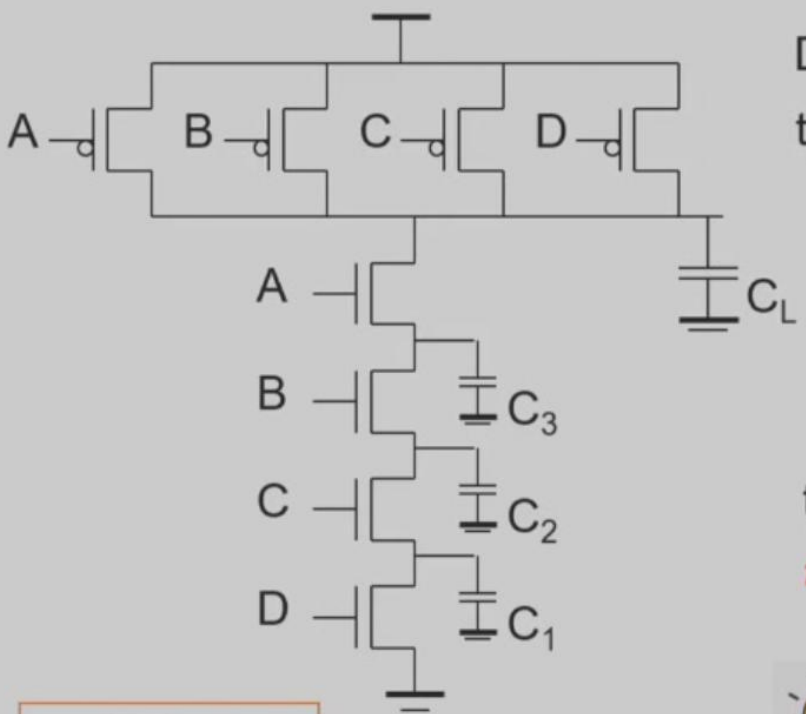

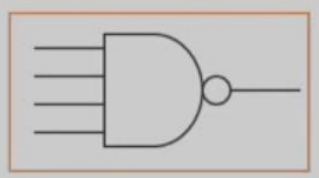

Distributed RC model (Elmore delay)

$$t_{pHL} = 0.69\,[R_1C_1+(R_1+R_2)C_2+(R_1+R_2+R_3)C_3+(R_1+R_2+R_3+R_4)C_L]$$

NMOS: same size R_{eqn}

$$t_{pHL} = 0.69\,R_{eqn}(C_1+2C_2+3C_3+4C_L)$$

the worst-case

- The number of transistor required to implement an N fan-in is 2N =>area, capacitance
- Propagation delay deteriorates rapidly as a function of fan-in (# of inputs) – Quadratically

主要内容（12）

- Digital power consumption: $P_{\text{switching}} = \alpha C V_{DD}^{2} f$

- Inverter: 反相器的阈值电压和 $(W/L)_{pmos} / (W/L)_{nmos}$ 为正比

- Delay: 反相器延时 $t_p = t_{p0}(1 + C_{ext}/\gamma C_g)$

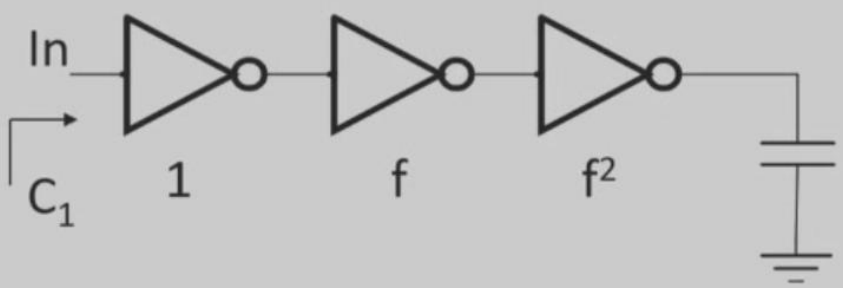

$N = \ln(F)$

$f = 2.71828 = e$

主要内容（13）

- Digital power consumption

静态功耗: 漏电流

动态功耗: $P_{\text{switching}} = \alpha C V_{DD}^{2} f$

静态功耗与动态功耗与 工艺尺寸缩小的关系分别是?

- Inverter: 反相器的阈值电压和 $(W/L)_{pmos}$ / $(W/L)_{nmos}$ 为正比

主要内容（14）

- Delay: 反相器延时 $t_p = t_{p0}(1 + C_{ext}/\gamma C_g)$

最短延时条件

第一步：每一级按相同的比例放大，每一级的等效Cext/Cg 都是一样的

第二步：共分为多少级，由总的F = Cext/Cg 来决定，通常选取>e

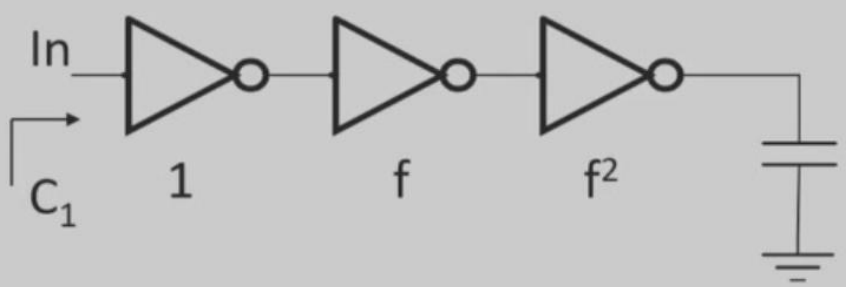

$N = \ln(F)$

$f = 2.71828 = e$

主要内容（15）

- 传输门，组合逻辑，动态逻辑 （两者的定义与区别）
- 从逻辑表达式 到电路拓扑图 到版图

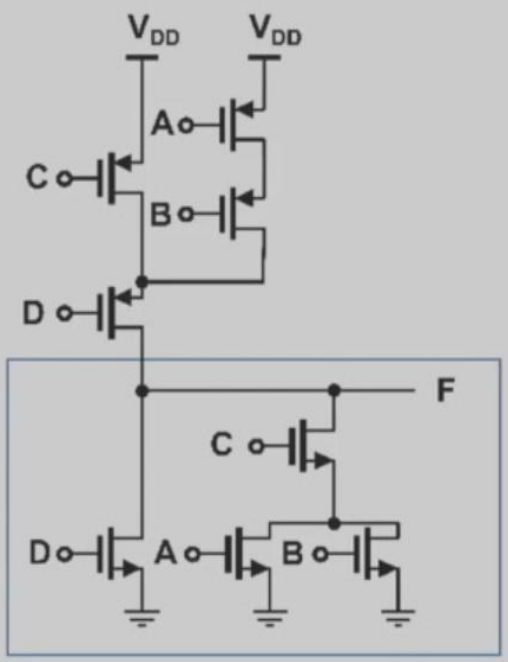

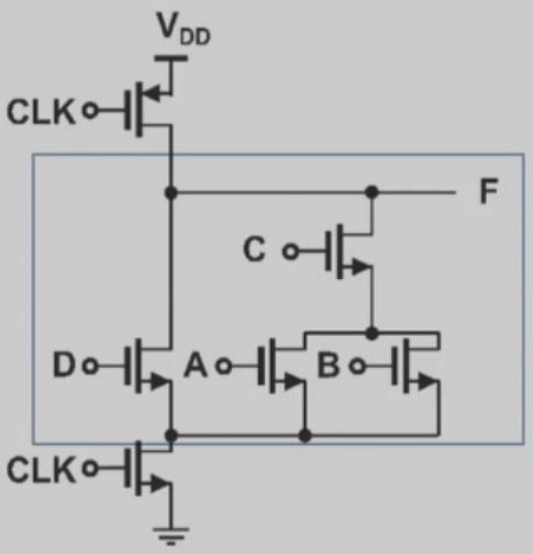

Analog Example (1)

A single-stage amplifier is shown in Fig.4, assuming $\gamma=0$, $\lambda\neq0$ and $r_O>>1/g_m$.

(1) Please give its **equivalent small-signal circuits.** And calculate the symbolic small-signal **output resistance**, r_{out}, and **the voltage gain**, A_v;

(2) If the width W_1 of M_1 is increased, how does the gain change? Explain the reason;

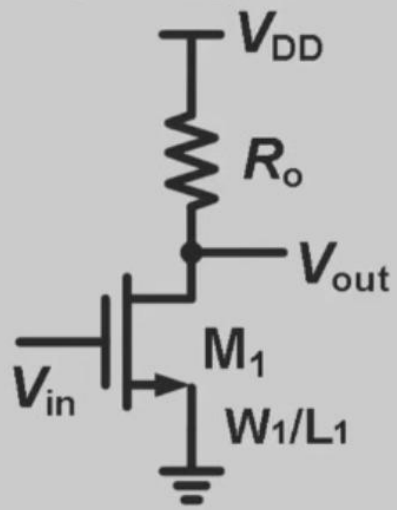

(1) $r_{out}=r_o//R_o$（2 分），$A_v=g_m\times R_{out}=g_m\times(r_o//R_o)$（2 分）

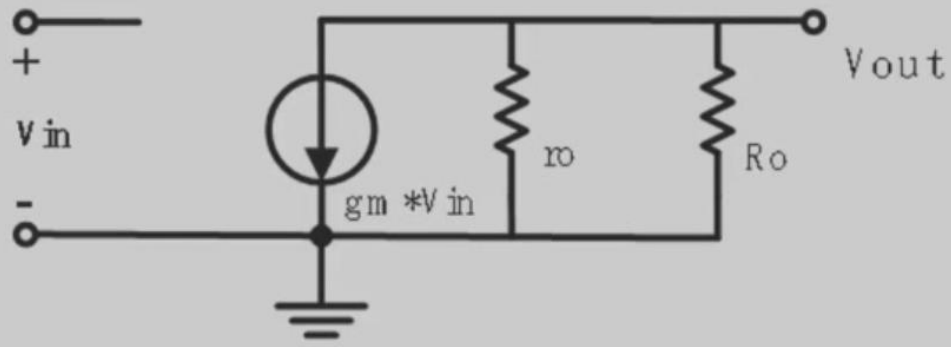

(4 分，按实际绘图情况给分)，没有画 ro 扣 1 分

(2) $g_m=K\frac{W_1}{L_1}(V_{GS}-V_{TH})(1+\lambda V_{DS})$，$r_o=\frac{1}{\lambda I_D}=\frac{2}{\lambda K\frac{W_1}{L_1}(V_{GS}-V_{TH})^2(1+\lambda V_{DS})}$

$$A_v=g_m\frac{r_oR_o}{r_o+R_o}=K\left(\frac{W_1}{L_1}\right)(V_{GS}-V_{TH})(1+\lambda V_{DS})\frac{R_o}{1+\lambda I_DR_o}$$

$$=K(V_{GS}-V_{TH})(1+\lambda V_{DS})R_o\left(\frac{1}{\frac{L_1}{W_1}+\frac{1}{2}\lambda KR_o(V_{GS}-V_{TH})^2(1+\lambda V_{DS})}\right)$$

所以总体的增益是增加的 （2 分）

Analog Example (2)

In the circuit of Fig 6.3, assume that I_{SS}=1mA, V_{DD}=3V and W/L=50/0.5 for all the transistors. And I_{D5}=I_{D6}=0.8 (I_{SS}/2). Assuming **λ≠0**.

(a) Determine the **symbolic** voltage gain.

(b) Calculate V_b.

(c) What is the input common mode voltage range

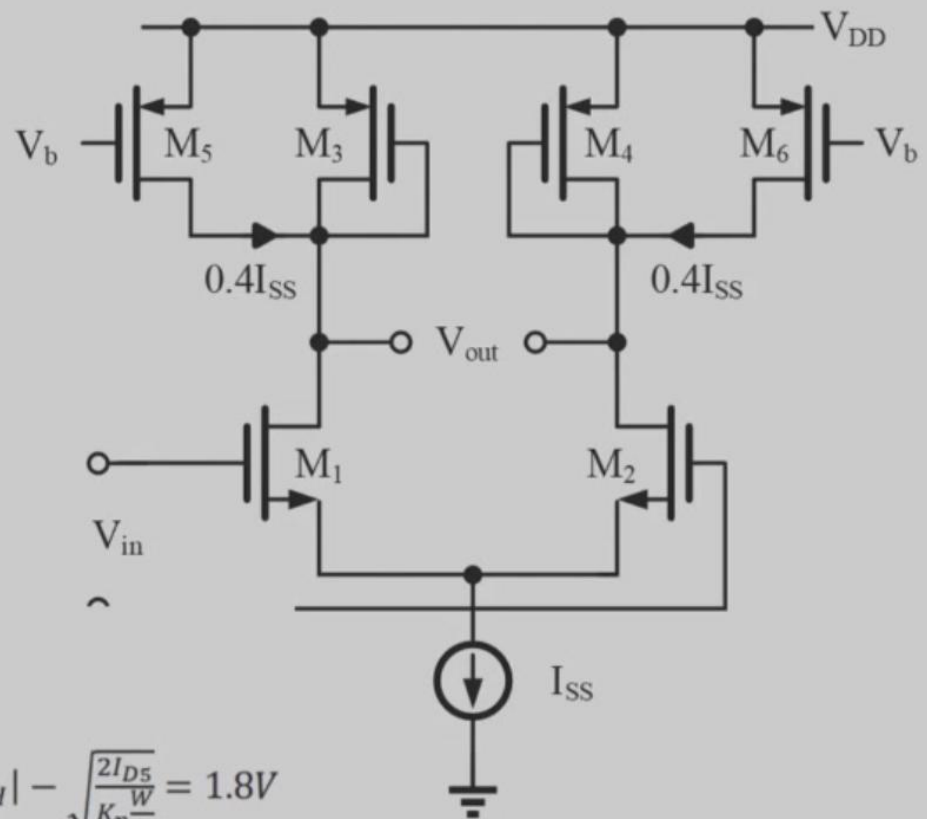

a) $A_V \approx -\frac{g_{m1}}{g_{m3}} = -\sqrt{\frac{K_n I_{D1}}{K_p I_{D3}}} = -\sqrt{\frac{134\times 0.5 I_{SS}}{50\times 0.2\frac{I_{SS}}{2}}} = -3.66$

b) $I_{D5} = I_{D6} = 0.8\frac{I_{SS}}{2} = 0.4mA, V_b = V_{DD} - V_{SG5} = V_{DD} - |V_{TH}| - \sqrt{\frac{2I_{D5}}{K_p\frac{W}{L}}} = 1.8V$

Digital Example

(1) Please describe the concept of "**static logic circuit**" and "**dynamic logic circuit**" in digital circuits;

(2) Sketch 4-input gates $F = \overline{A + BC + D}$ using the circuit techniques of **static CMOS** and **dynamic gates**, respectively.

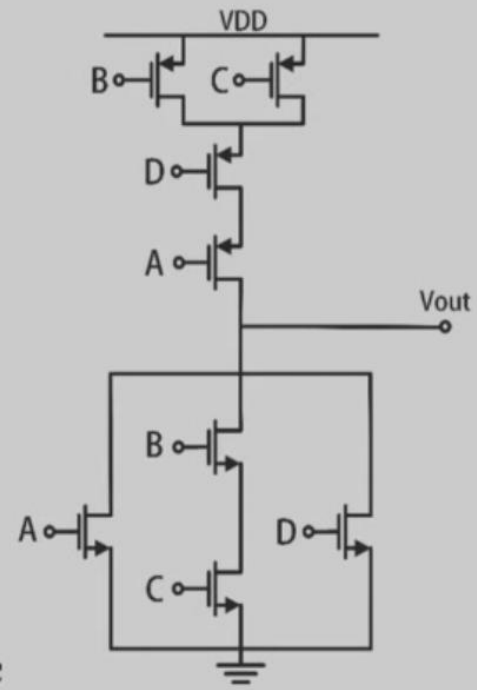

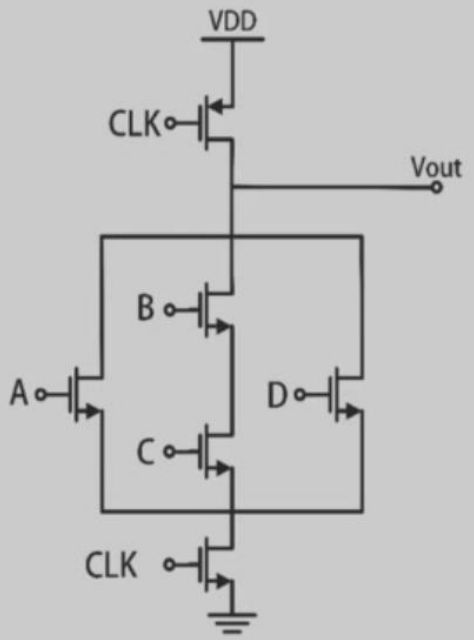

The *static* circuits class, which each gate output is connected to either *VDD* or *Vss* via a low-resistance path at every point in time.

The *dynamic* circuit class, which relies on temporary storage of signal values on the capacitance of high-impedance circuit nodes.