# 集成电路原理与设计
# 组合逻辑门

谭志超
zhichaotan@zju.edu.cn

# Goals

- In-depth discussion of logic families in CMOS
  - Static and Dynamic
  - Non-retioed and ratioed logic
  - Pass-transistor
- Optimizing a logic gate for area, speed, energy, or robustness

# Combinational vs. Sequential Logic

## Combinational

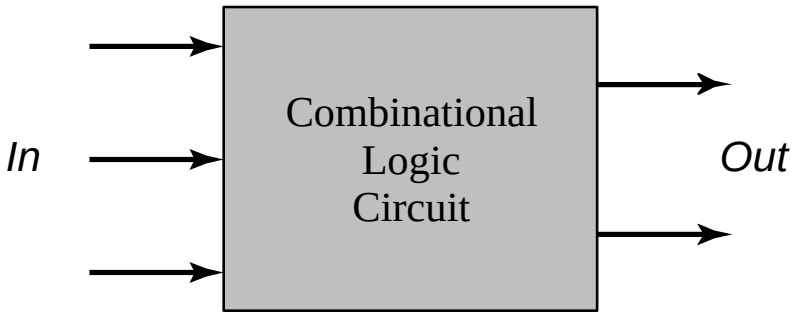


**Output=*f*(In)**

## Sequential

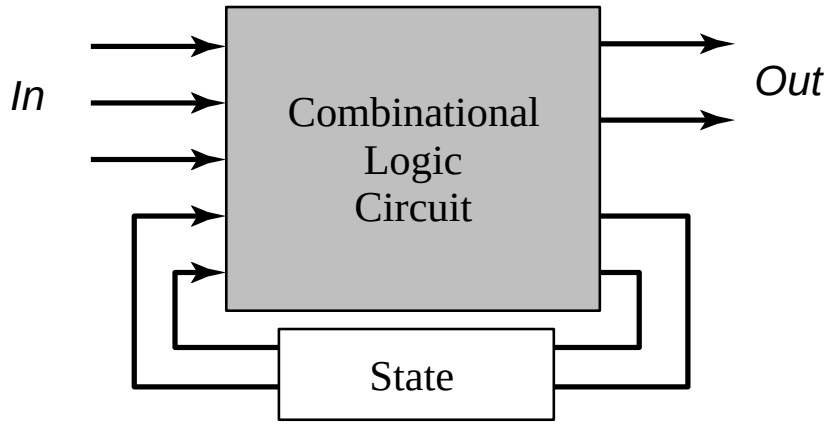


**Output=*f*(In, Previous In)**

# Combinational logic expressions

- Combinational logic: function value is a combination of function arguments.
- A logic gate implements a particular logic function.
- Both specification (logic equations) and implementation (logic gate networks) are written in Boolean logic.

**Why designing gates for logic functions is non-trivial:**

- may not have logic gates in the library for all logic expressions;
- a logic expression may map into gates that consume a lot of area, delay, or power.

# CMOS Circuit Styles

- **Static CMOS**

  *output connected to either VDD or GND via a low-resistance path*

  - high noise margins
  - low output impedance, high input impedance
  - no steady state path between VDD and GND
  - delay a function of load capacitance and transistor resistance

- **Dynamic CMOS**

  *relies on temporary storage of signal values on the capacitance of high-impedance circuit nodes*

  - simpler, faster gates
  - increased sensitivity to noise

# Outline

- Static CMOS Design
  - Complementary CMOS
  - Ratioed Logic
  - Pass-Transistor Logic
- Dynamic CMOS Design

# Static Complementary CMOS

- **Complementary: complementary Pull-up Network (PUN, P-type) *vs.* Pull-down Network (PDN, N-type)**
- **Static: do not rely on stored charge**
- **Simple, effective, reliable; hence ubiquitous**

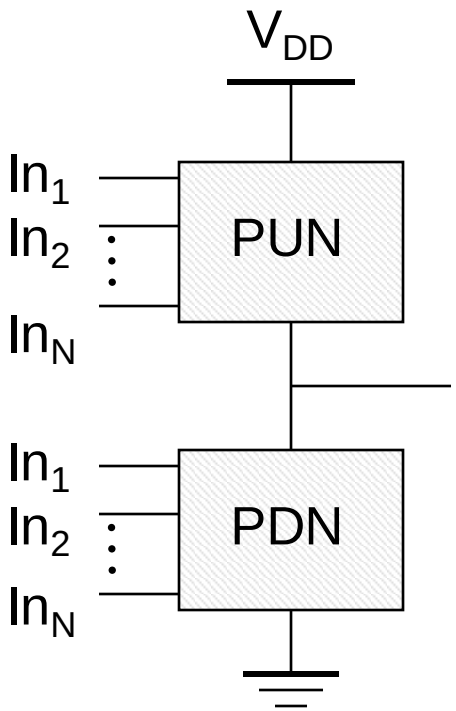


PMOS transistors only

**pull-up:** make a connection from $V_{DD}$ to F when $F(In_1,In_2,\ldots In_N) = 1$

**pull-down:** make a connection from F to GND when $F(In_1,In_2,\ldots In_N) = 0$

NMOS transistors only

**PUN and PDN are dual logic networks**

# Threshold Drops

## A. Why PMOS in PUN and NMOS in PDN?

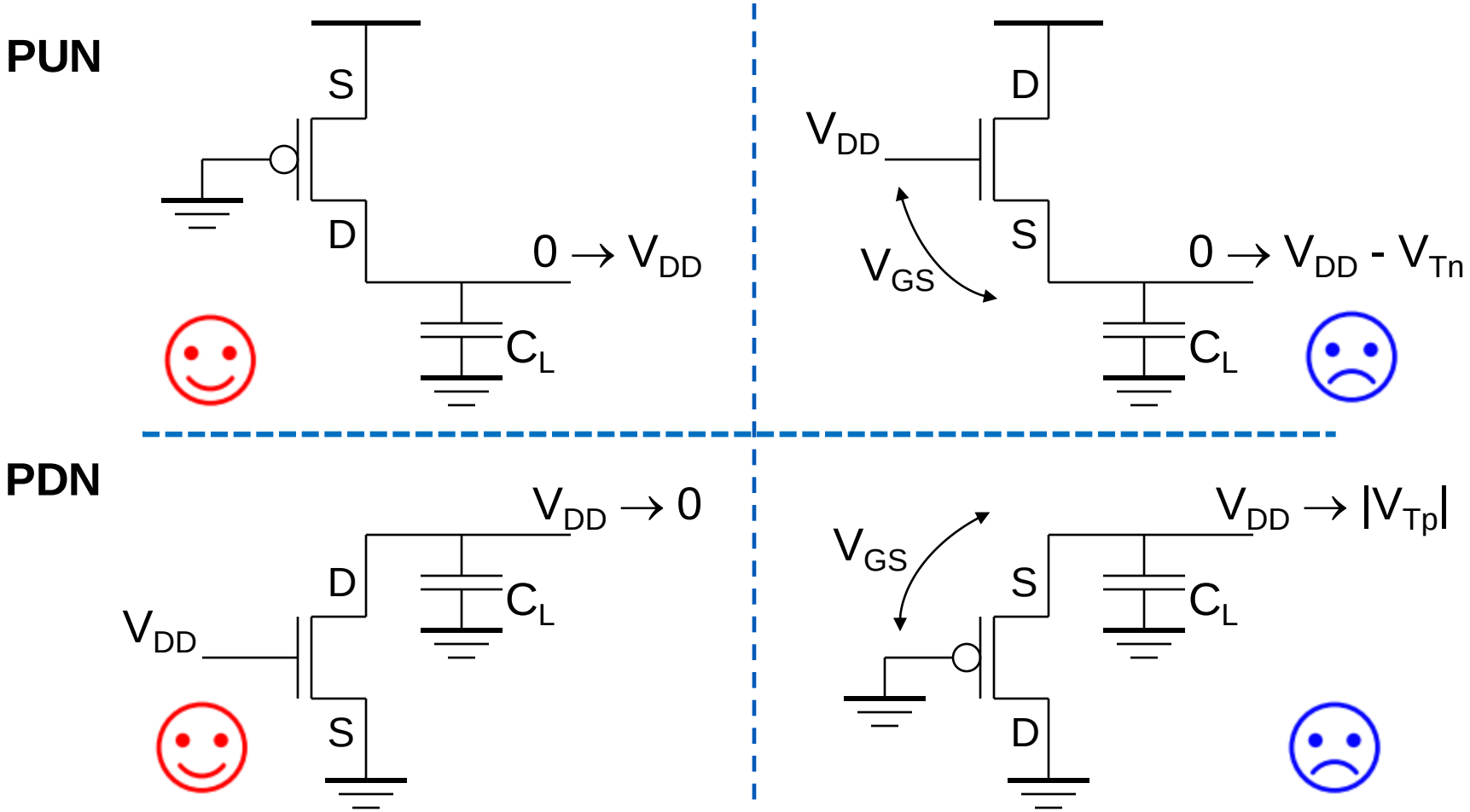

# NMOS/PMOS in Series/Parallel Connection

**B. Transistors can be thought as a switch controlled by its gate signal**

- *NMOS switch closes when switch control input is high*

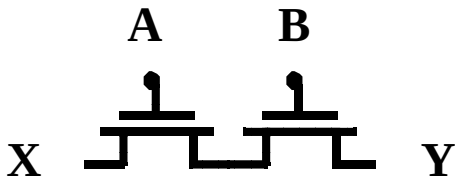


$Y = X \quad \text{if } A \textit{ and } B$

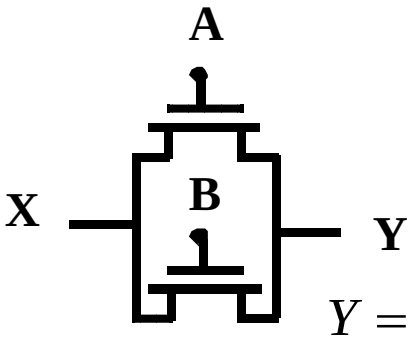


$Y = X \quad \text{if } A \textit{ or } B$

- *PMOS switch closes when switch control input is low*

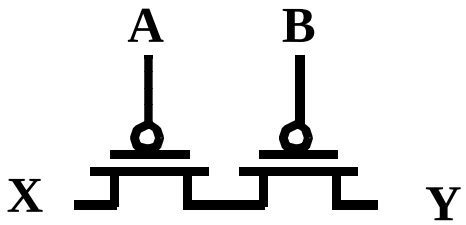


$Y = X \quad \text{if } \bar{A} \textit{ and } \bar{B} = \overline{A+B}$

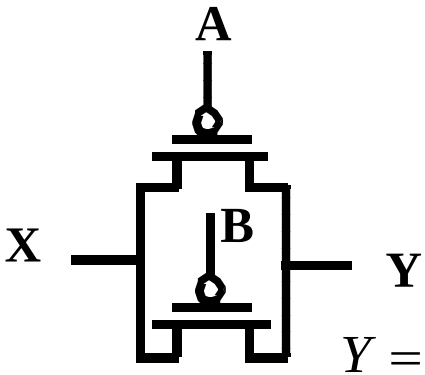


$Y = X \quad \text{if } \bar{A} \text{ or } \bar{B} = \overline{AB}$

# Construction of PDN

- NMOS devices in series implement a NAND function

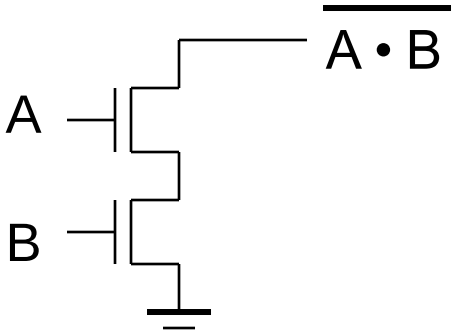


- NMOS devices in parallel implement a NOR function

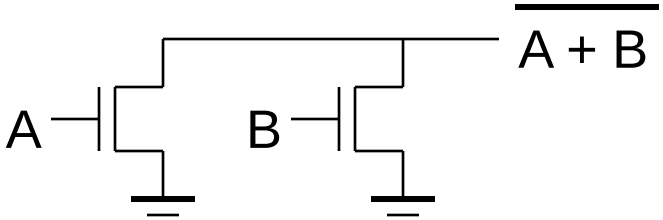

# Dual PUN and PDN

**C. PUN and PDN are dual networks** 对偶网络

- De Morgan's theorems

  $\overline{A + B} = \overline{A} \cdot \overline{B}$ [!(A + B) = !A • !B or !(A | B) = !A & !B]

  $\overline{A \cdot B} = \overline{A} + \overline{B}$ [!(A • B) = !A + !B or !(A & B) = !A | !B]

- a parallel connection of transistors in the PUN corresponds to a series connection of the PDN

**D. Complementary gate is naturally inverting (NAND, NOR)**

***{NANI*** 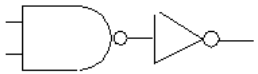 ***ts; {AND, OR} is not complete.***

**AND = NAND + INV**

**E. Number of transistors for N-input logic gate: 2N**

# Dual PUN and PDN: Example

- **CMOS NAND**

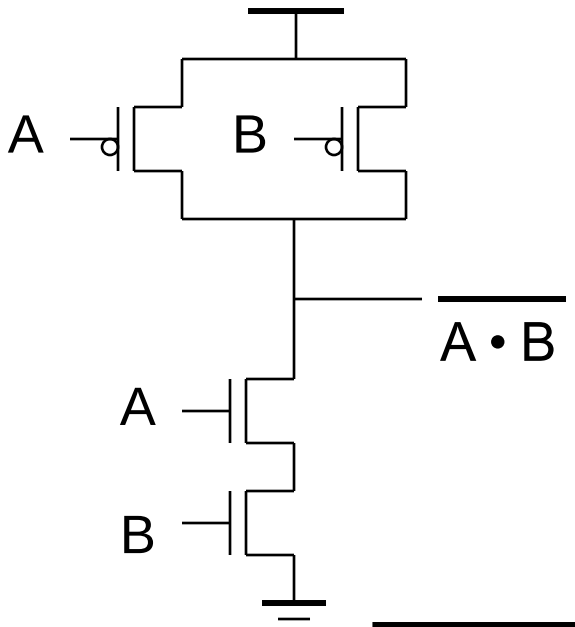


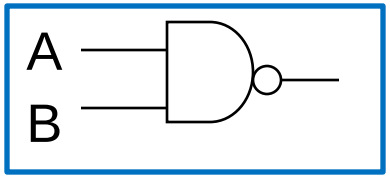


| A | B | F |
|---|---|---|
| 0 | 0 | 1 |
| 0 | 1 | 1 |
| 1 | 0 | 1 |
| 1 | 1 | 0 |

- **CMOS NOR**

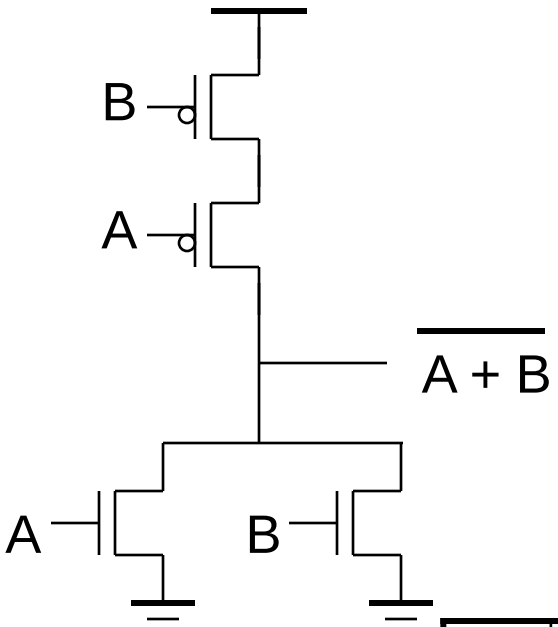


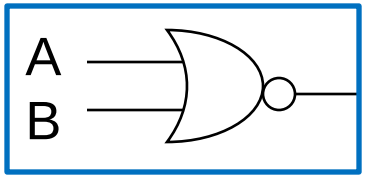


| A | B | F |
|---|---|---|
| 0 | 0 | 1 |
| 0 | 1 | 0 |
| 1 | 0 | 0 |
| 1 | 1 | 0 |

# Dual PUN and PDN: Example

- **Complex CMOS Gate**

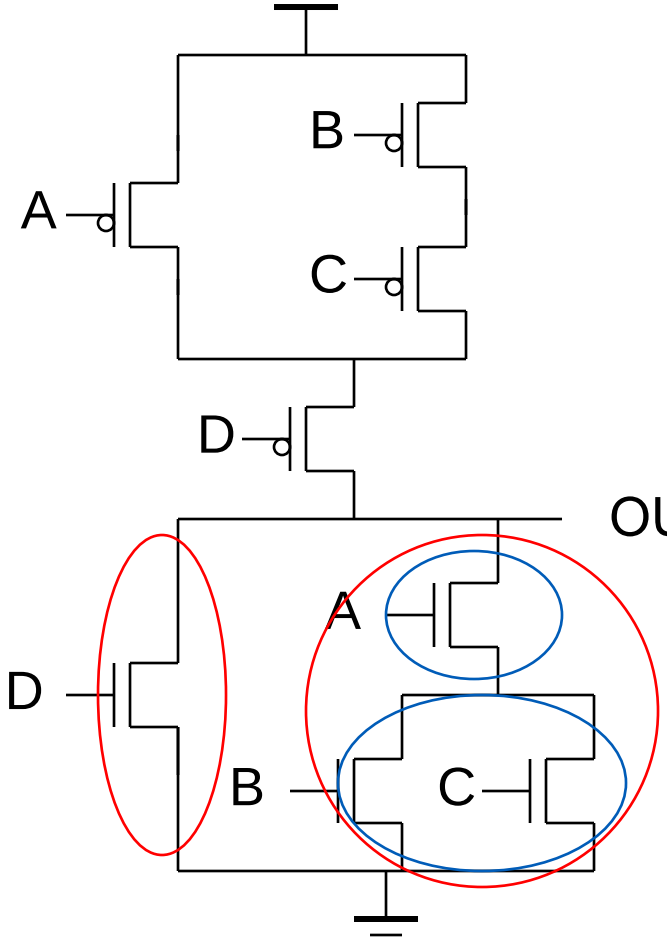


$$OUT = \overline{D + A \bullet (B + C)}$$

# Dual PUN and PDN: Example

- **CMOS Gate Layout**

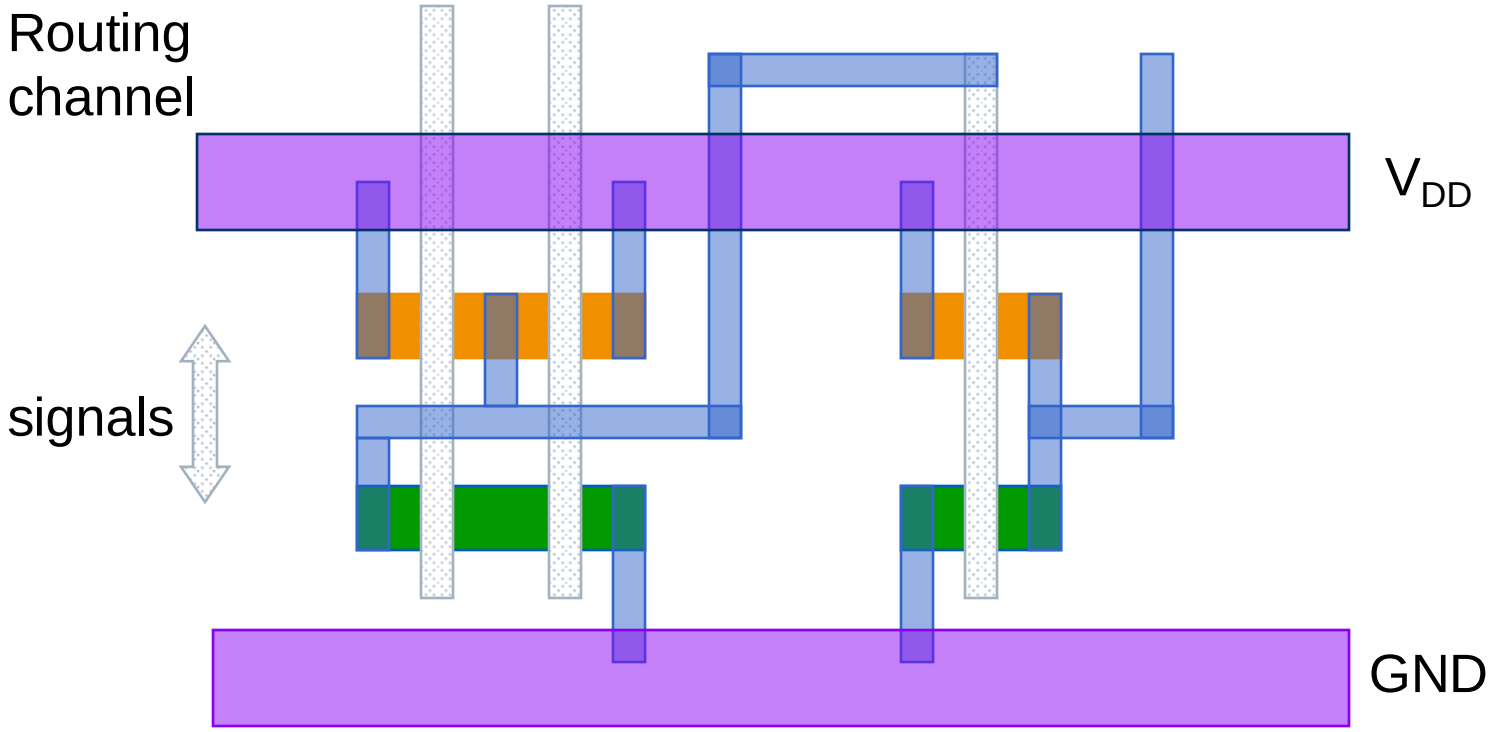


What logic function is this?

# VTC: Data-Dependent

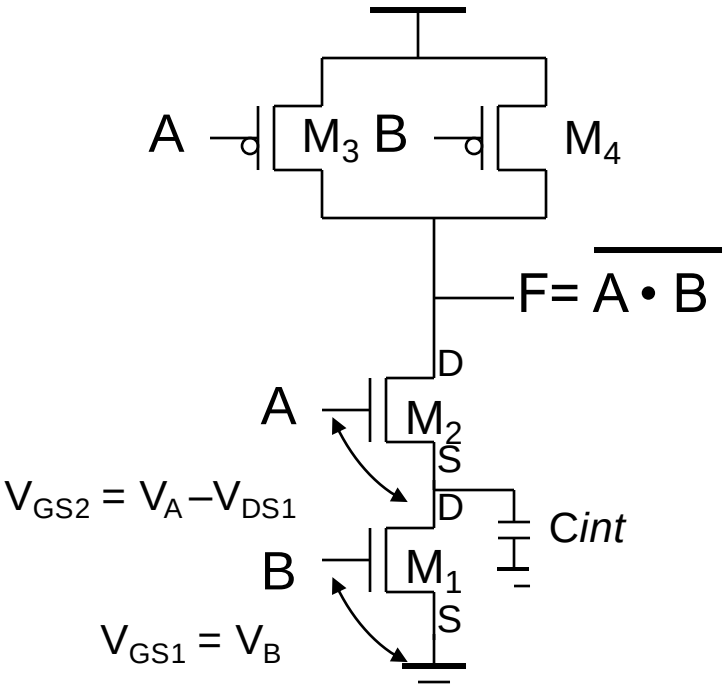


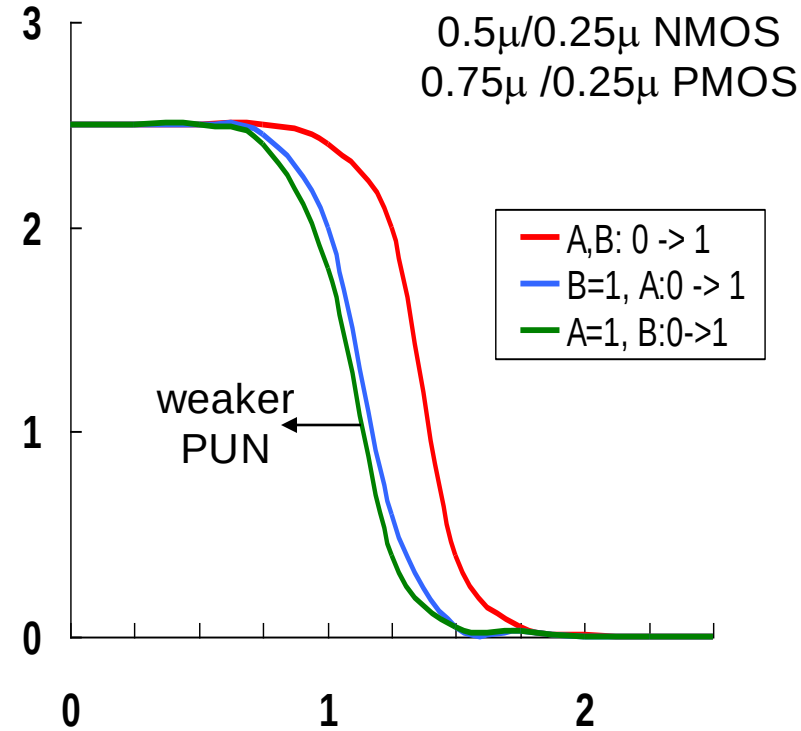


- $V_{TH}$ of $M_2$ is higher than $M_1$: the body effect ($\gamma$)

$$V_{Tn1} = V_{Tn0} \qquad V_{Tn2} = V_{Tn0} + \gamma(\sqrt{(|2\phi_F| + V_{int})} - \sqrt{|2\phi_F|})$$

***The noise margins are input-pattern dependent.***

# Switch Delay Model

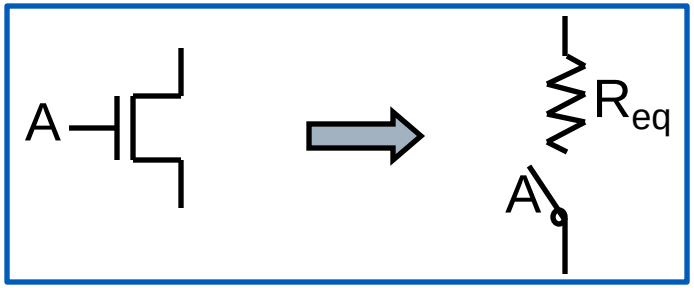


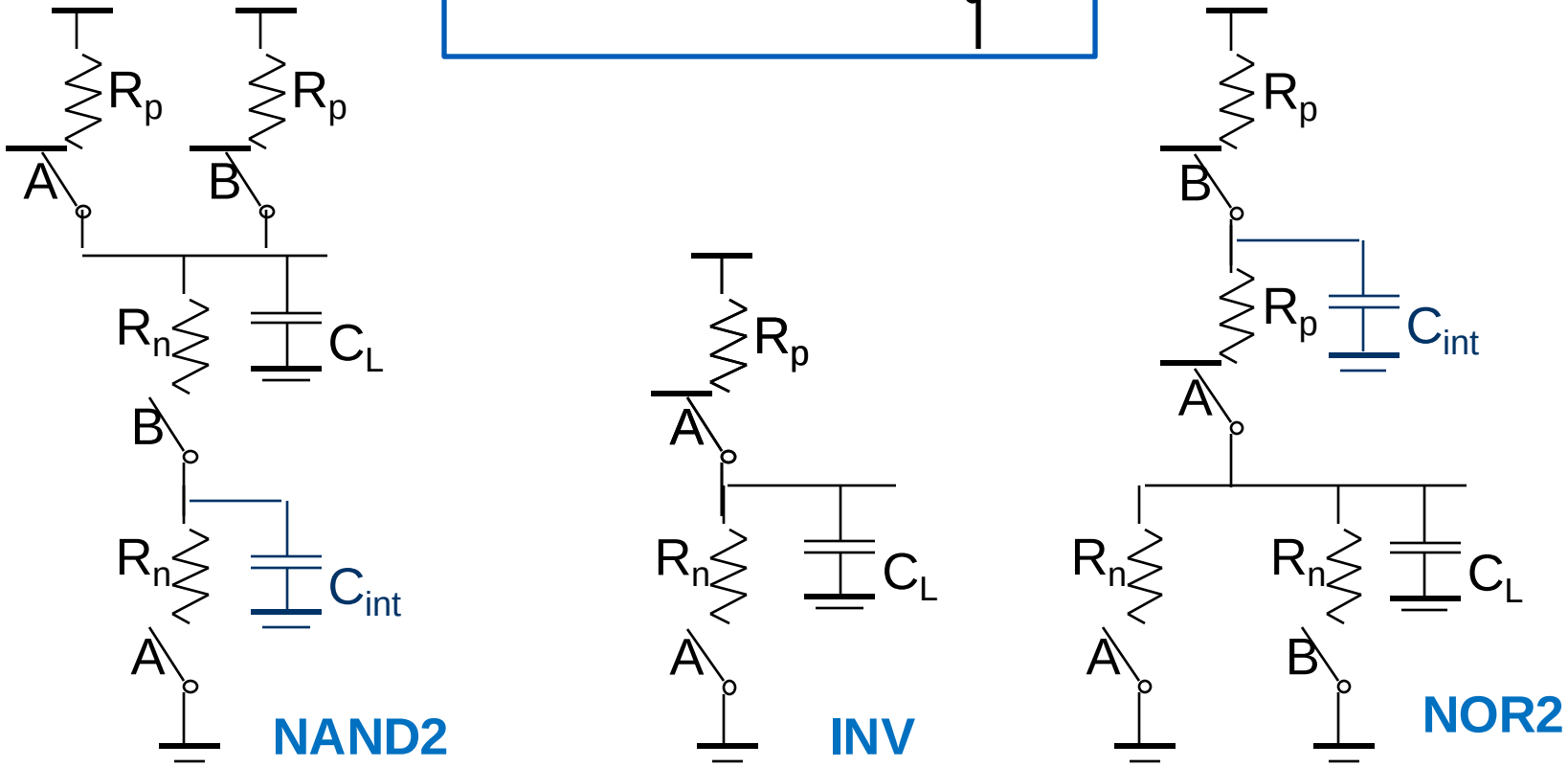

# Propagation Delay: Input Patterns

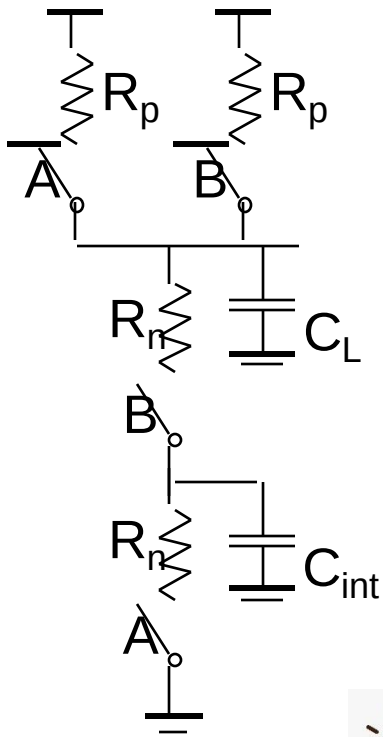


**NAND2**

- Delay is dependent on **the input patterns**
- Input: high to low transition
  - both inputs go low: 0.69 $R_p/2$ $C_L$
  - one input goes low: 0.69 $R_p$ $C_L$
- Input: low to high transition
  - both inputs go high: 0.69 $2R_n$ $C_L$

*Adding devices in series: slow down*

*Wider device: avoid a performance penalty*

***A gate with multi-in's: the combination of input that triggers the worst-case conditions.***

# Delay Dependence on Input Patterns

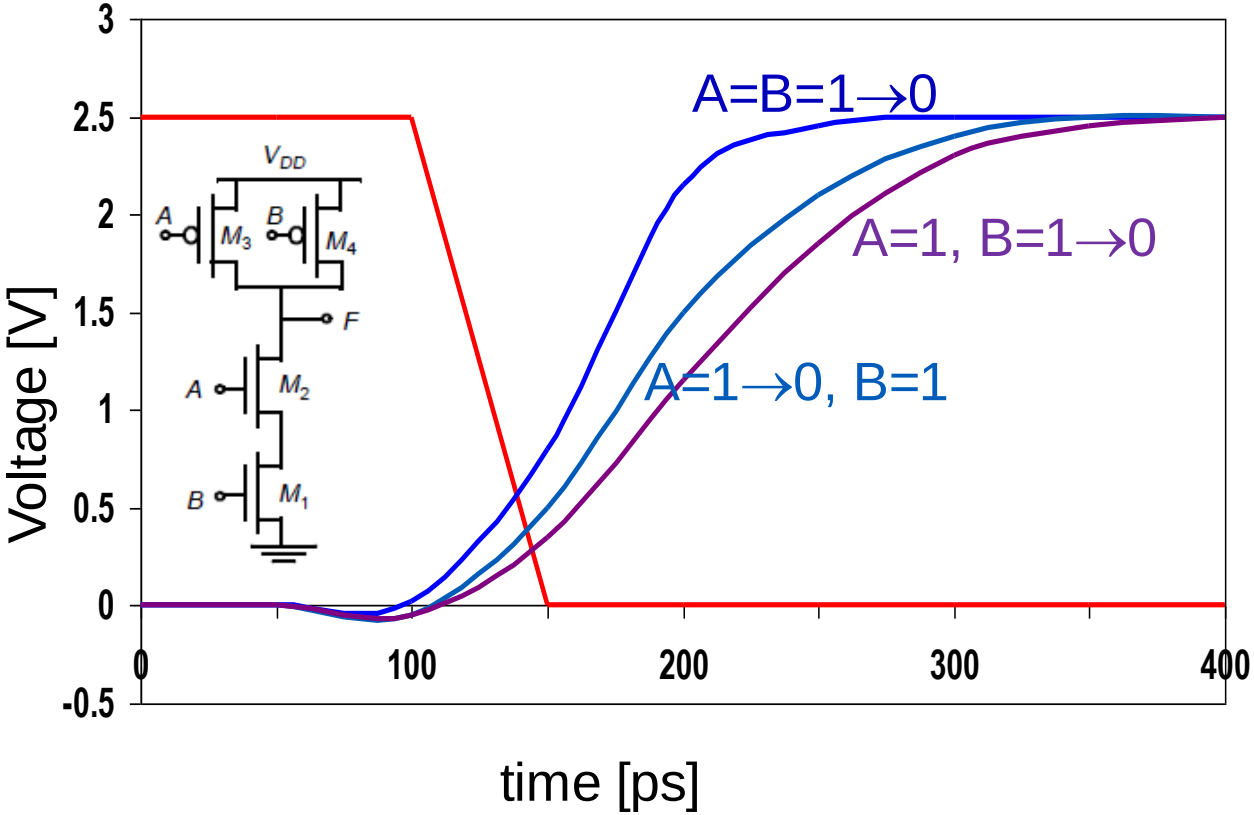


| Input Data Pattern | Delay (psec) |
|---|---|
| A=B=0→1 | 69 |
| A=1, B=0→1 | 62 |
| A= 0→1, B=1 | 50 |
| A=B=1→0 | 35 |
| A=1, B=1→0 | 76 |
| A= 1→0, B=1 | 57 |

Inverter: NMOS = 0.5μm/0.25 μm
PMOS = 1.5μm/0.25 μm

→ NMOS = 1.0μm/0.25 μm
PMOS = 1.5μm/0.25 μm

# Transistor sizing

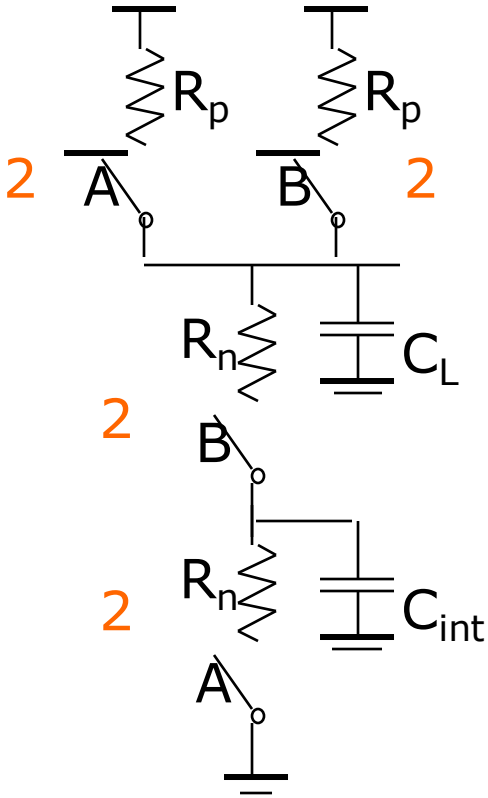


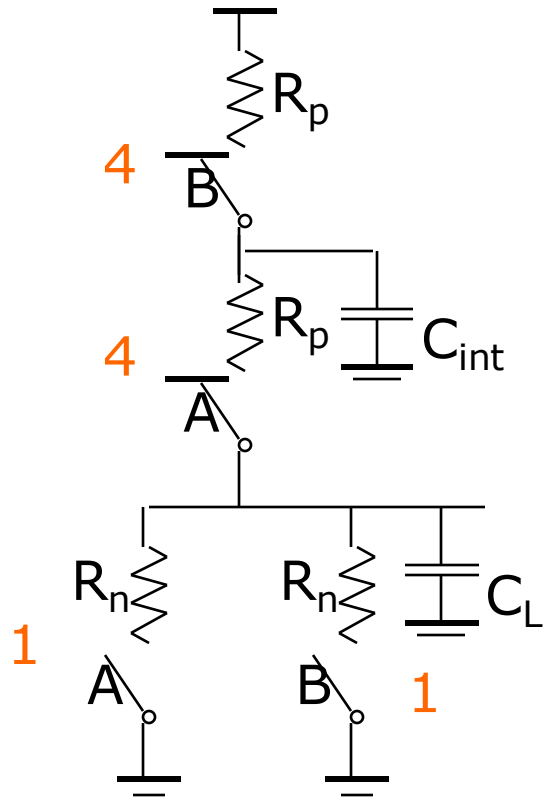


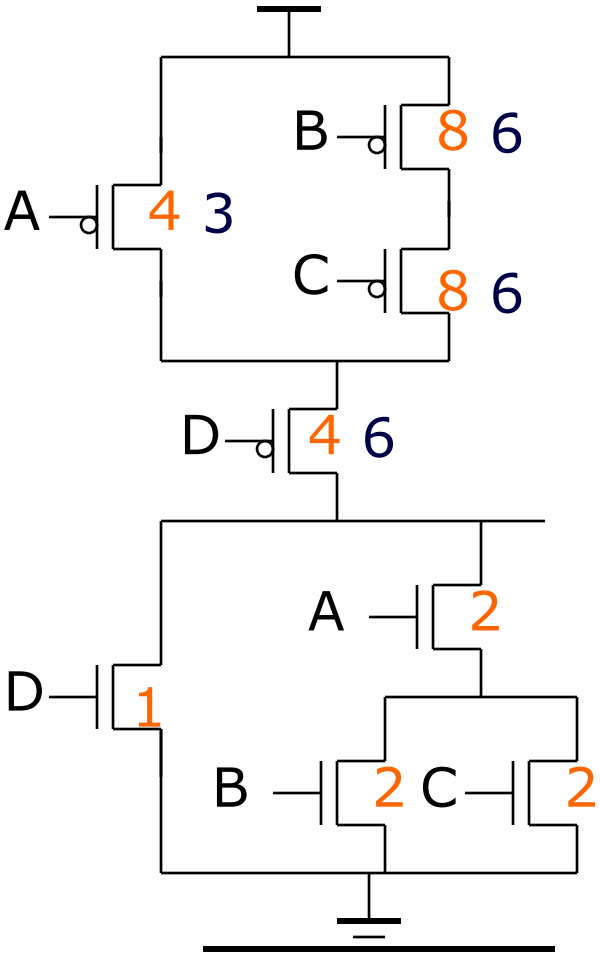


OUT = D + A • (B + C)

# Fan-In Considerations

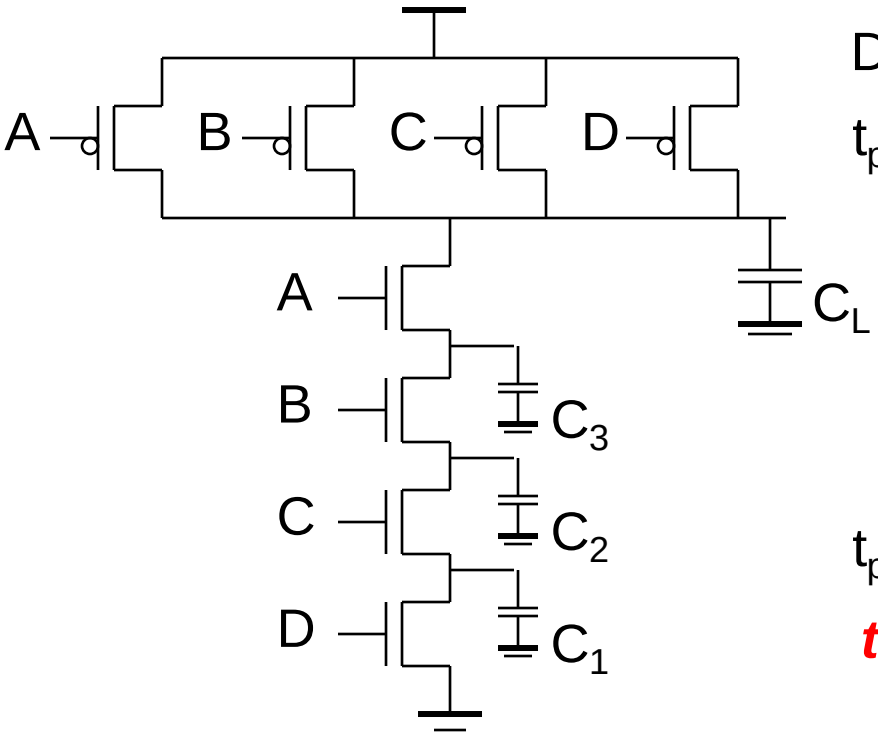


Distributed RC model (Elmore delay)

$$t_{pHL} = 0.69\,[R_1C_1+(R_1+R_2)C_2+(R_1+R_2+R_3)C_3+(R_1+R_2+R_3+R_4)C_L]$$

NMOS: same size $R_{eqn}$

$$t_{pHL} = 0.69\,R_{eqn}(C_1+2C_2+3C_3+4C_L)$$

***the worst-case***

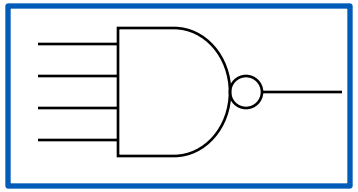

- The number of transistor required to implement an N fan-in is 2N =>area, capacitance
- Propagation delay deteriorates rapidly as a function of fan-in – quadratically in the worst case.

# $t_p$ as a Function of Fan-In

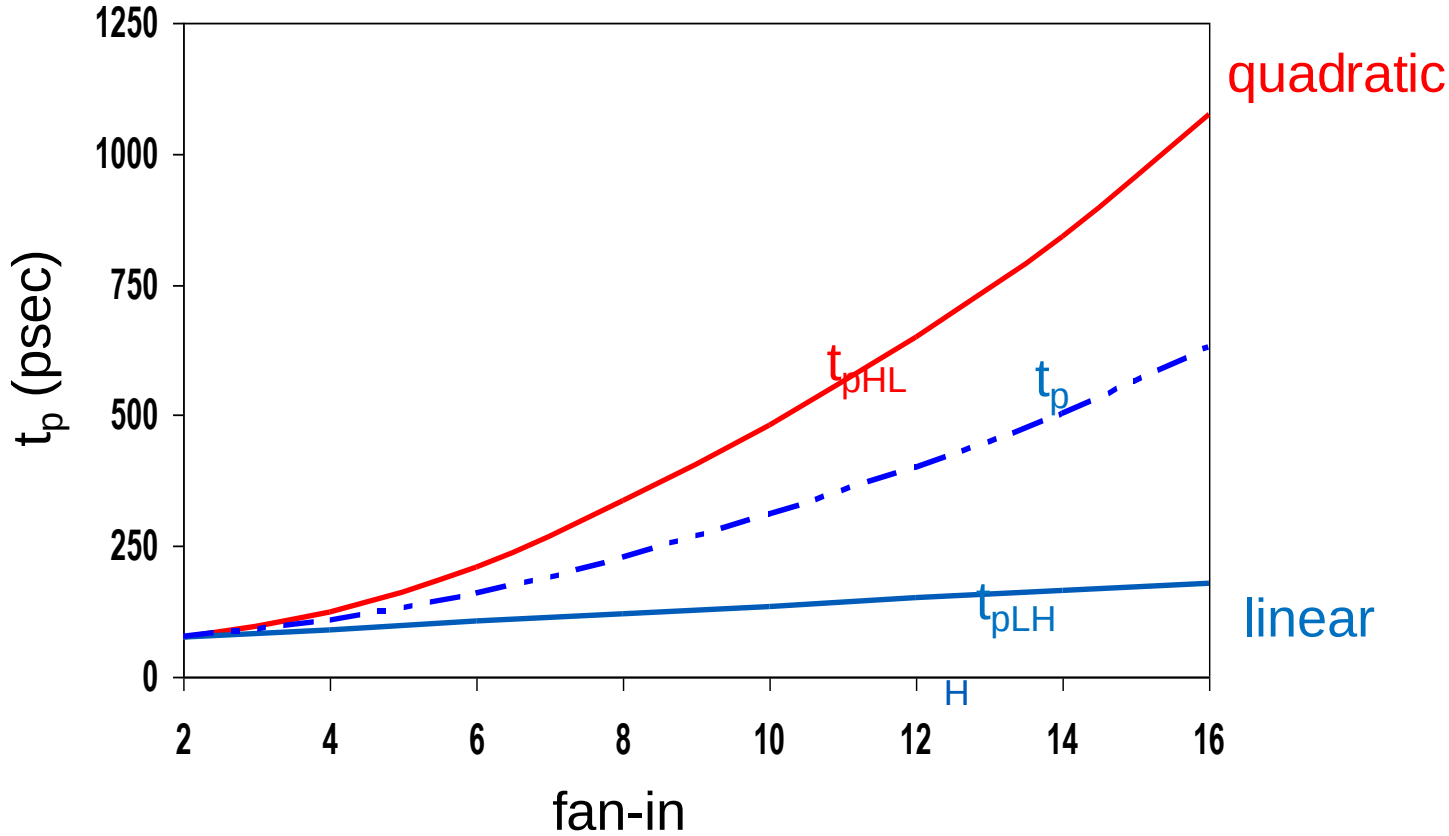


**NOTE!: Gates with a fan-in greater than 4 should be avoided.**

# Outline

- Static CMOS Design
  - Complementary CMOS
  - Ratioed Logic
  - Pass-Transistor Logic
- Dynamic CMOS Design

# Ratioed Logic

**Goal: to reduce the number of devices over complementary CMOS**

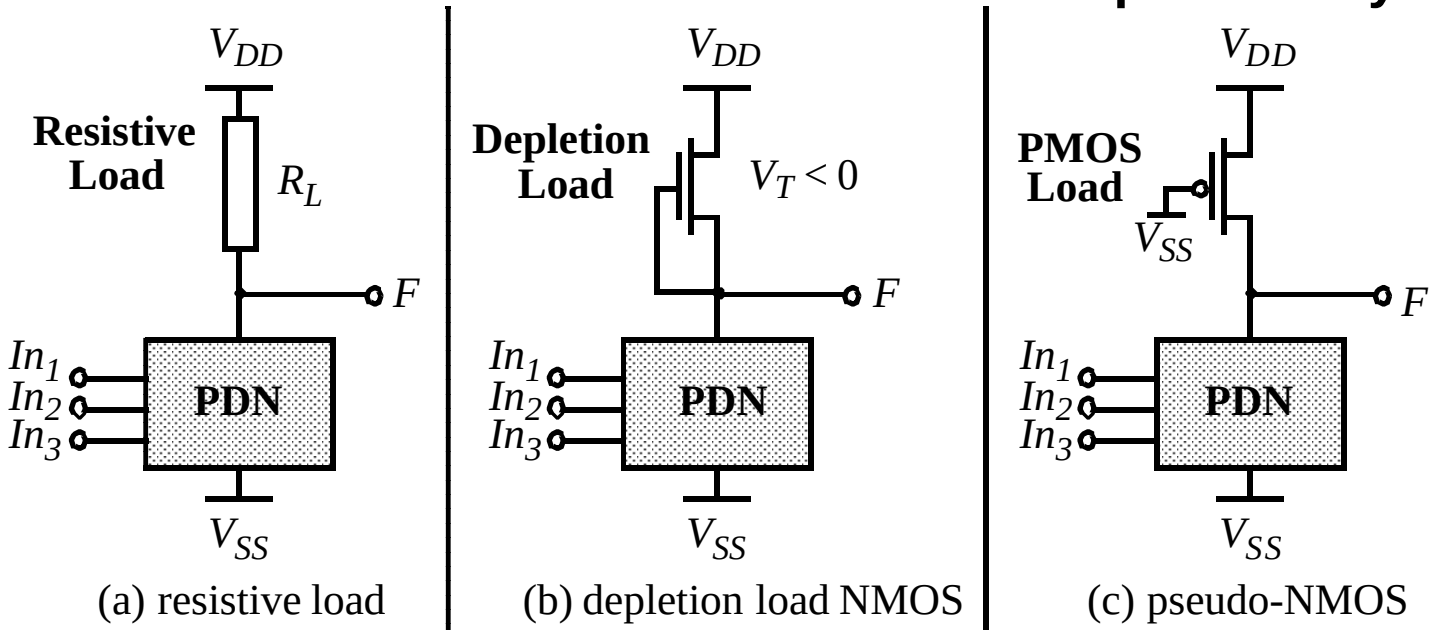


- *2N -> N+1*
- $V_{OH}$=*VDD*, $V_{OL}$≠*0* -》noise margin ↓, static power↑
- Tadeoff*: the size of the load relative to the PDN* vs. *NM, delay, power*
- **Ratioed Logic**
- **Pseudo-nMOS**

# Pseudo-NMOS: 2-input NOR

- Uses a p-type as a resistive pullup, n-type network for PDN.

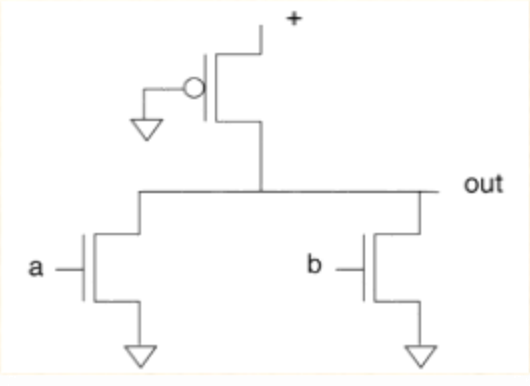


- Consumes static power.
- Much smaller PUN network than static gate.
- Pull-up time is longer.
- Wiring is simple.

- $V_{OH}$=*VDD*,
  $V_{OL}$≠>0 (Vss): $V_{OL}$ = 0.2 ($V_{DD}$ - $V_{SS}$) is one plausible choice.
- For logic 0 output, PUN and PDN form a voltage divider.
  Must choose N/P transistor sizes to create $R_{eq}$ of the required ratio.
- Effective resistance of PDN must be computed in worst case: series n-types means larger transistors.

# Transistor ratio calculation

- **In steady state logic 0 output:**

  PUN: *saturation* region $V_{ds}>V_{gs}-V_t$; PDN: *linear region* $V_{ds}<V_{gs}-V_t$.

  PUN and PDN: $I_{dp} = I_{dn}$.

- **Equate two currents while generate $V_{OL}$:**

  $I_{dp}=1/2k_p'(W_p/L_p)(V_{DD}-V_t)^2$;

  $I_{dn}=1/2k_n'(W_n/L_n)[2(V_{DD}-V_t)V_{OL}-V_{OL}^2]$;

  $$\Rightarrow V_{OL} = (V_{DD} - V_t)\left(1 - \sqrt{1 - \frac{k_p'(W_p/L_p)}{k_n'(W_n/L_n)}}\right)$$

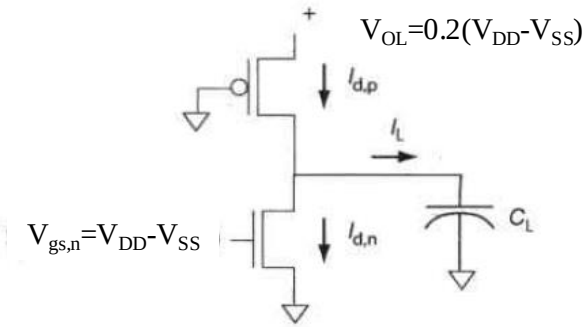


$V_{OL}$ is $0.2V_{DD}$, $V_t$, $k_p'$ and $k_n'$ is dependent on technology.

Using 0.18 um parameters, VDD=1.8V, $V_t \approx 0.4\sim0.5V$, $k_p'/k_n' \approx 0.18$

=> $W_p/L_p=2.5W_n/L_n$ (or $L_p/W_p=0.4L_n/W_n$ )

since equivalent resistance of MOS transistor $R_t=(L/W)R_{N,P}$, $R_N=0.2R_P$,

=> equivalent $R_{tp}=R_P$ (Lp/Wp)= 5 $R_N$ $0.4L_n/W_n$ $=2R_{tn}$, $\tau=R_tC_L$,

=> Pullup time is 2 times longer than pulldown for pseudo-NMOS.

# Pseudo-NMOS VTC

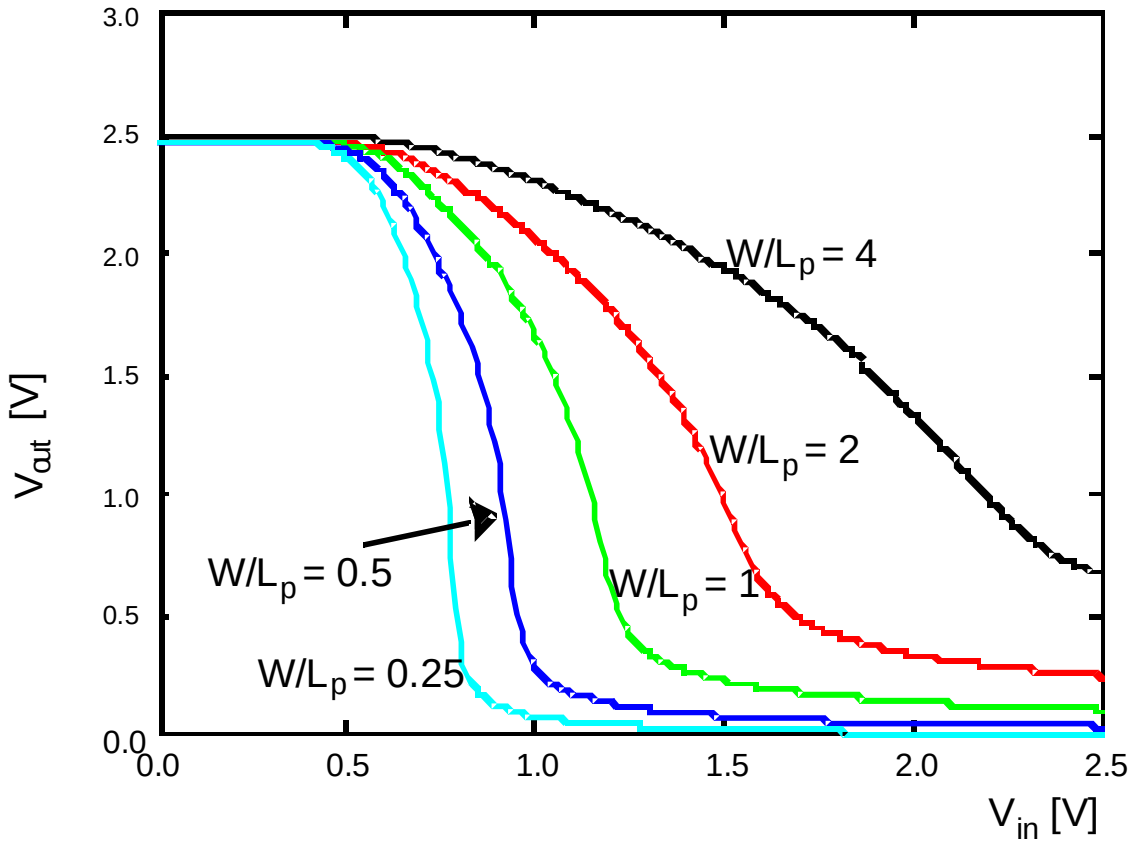


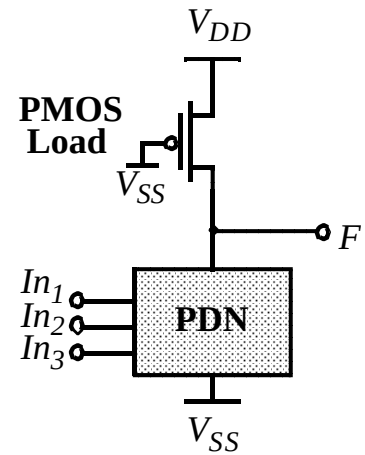


$$V_{OL} \approx \frac{\mu_p \cdot W_p}{\mu_n \cdot W_n} V_{DSATp}$$

- $V_{OL}\downarrow$ -> $(W/L)_P < (W/L)_P$
- Static power

| Size | $V_{OL}$(V) | Power(μW) | $t_{plh}$(ps) |
|---|---|---|---|
| 4 | 0.693 | 564 | 14 |
| 2 | 0.273 | 295 | 56 |
| 1 | 0.133 | 160 | 123 |
| 0.5 | 0.064 | 80 | 268 |
| 0.25 | 0.031 | 41 | 569 |

# Pseudo-NMOS: 4-input NOR and NAND

- Small area: *2N -> N+1*

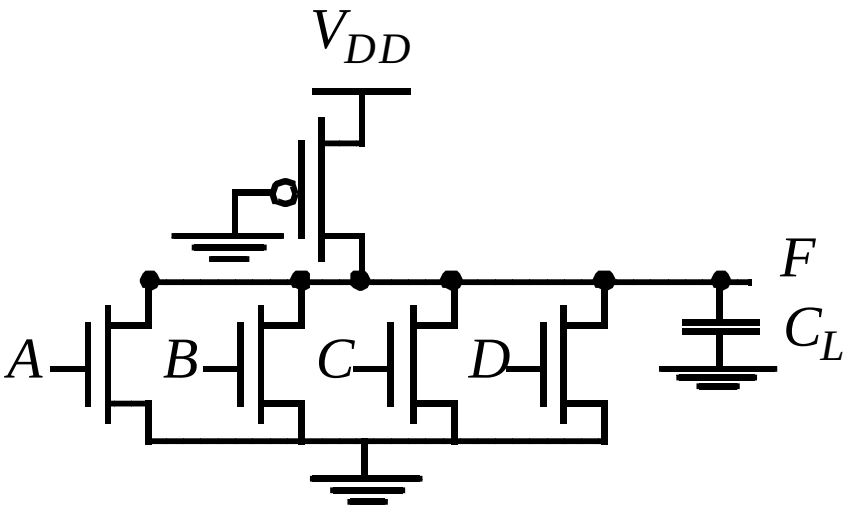


$V_{OH} = V_{DD}$ ***(similar to complementary CMOS)***

**NOR**

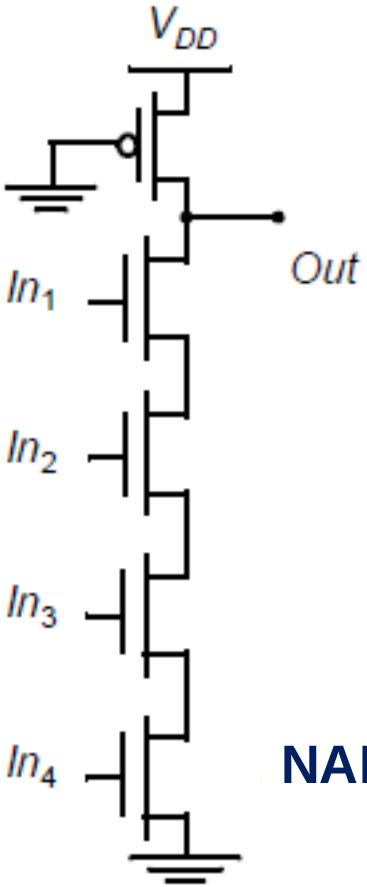


**NAND**

# Improved Loads - DCVSL

- Differential Cascode Voltage Switch Logic (DCVSL)

*Differential logic +Positive feedback*

*PDN1 and PDN2: 1) NMOS*

*2)exclusive*

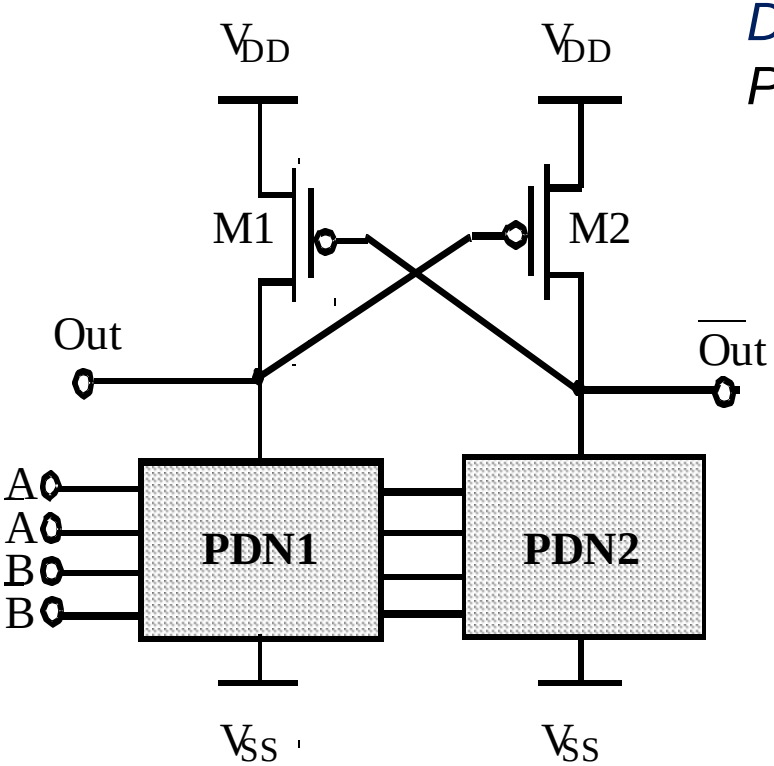


*-- Differential Output*

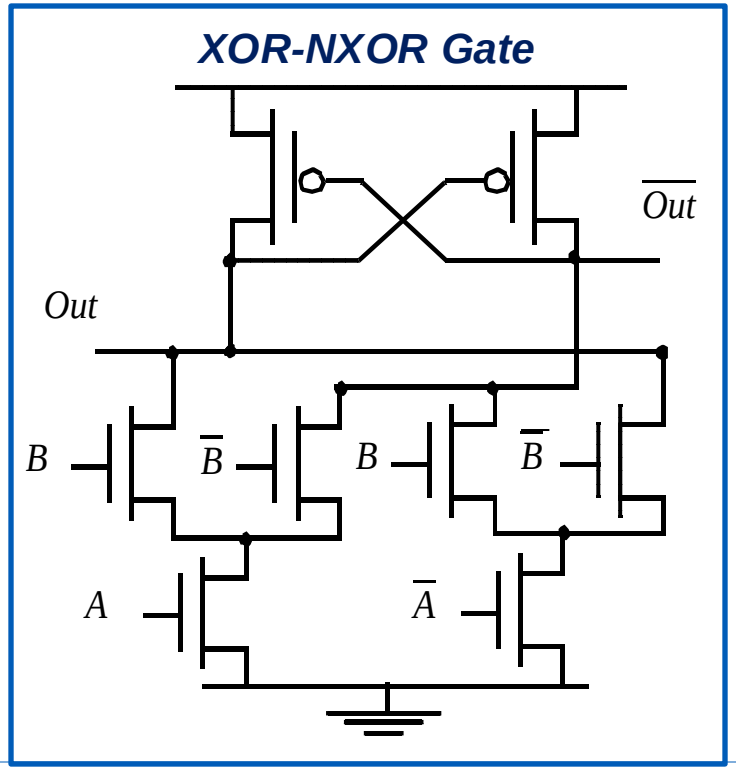

# DCVSL Transient Response: AND/NAND

- AND/NAND gate in DCVSL

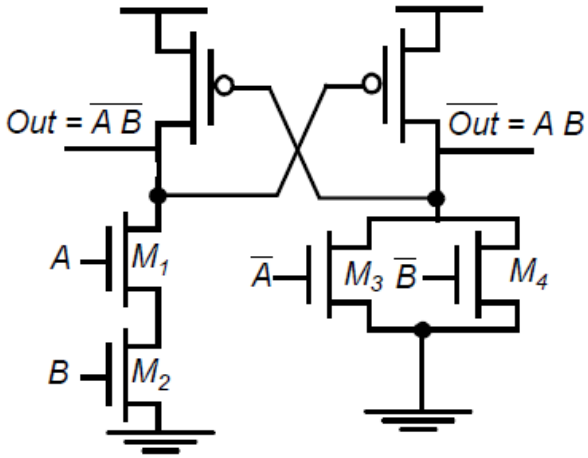


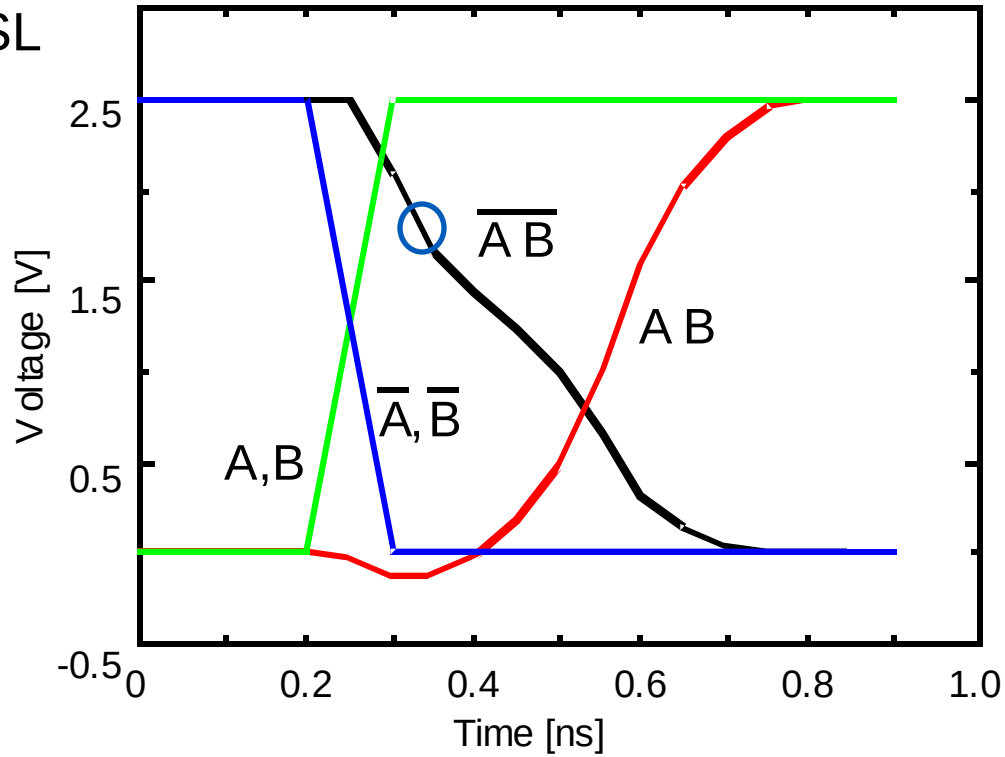


NOTE:

- As *Out* is pulled down to *VDD*-|*VTp*|, !*Out* starts to charge up to *VDD* quickly.
- The delay from the input to *Out* is 197 psec and to !*Out* is 321 psec.

# Outline

- Static CMOS Design
  - Complementary CMOS
  - Ratioed Logic
  - Pass-Transistor Logic
- Dynamic CMOS Design

# Pass-Transistor (PT) Logic

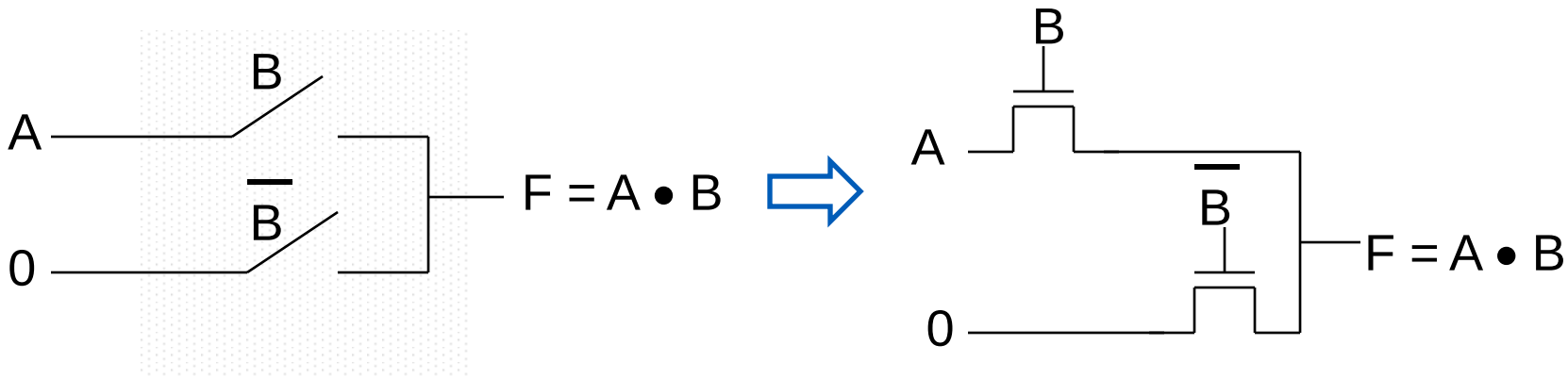


- Gate is static - a low-impedance path exists to both supply rails under all circumstances
- N transistors instead of 2N
- No static power consumption
- Ratioless

# Pass-Transisitor AND Gate: VTC

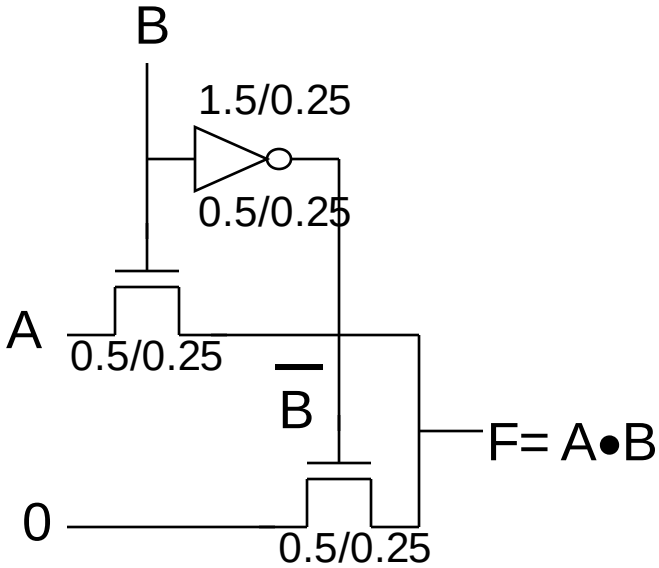


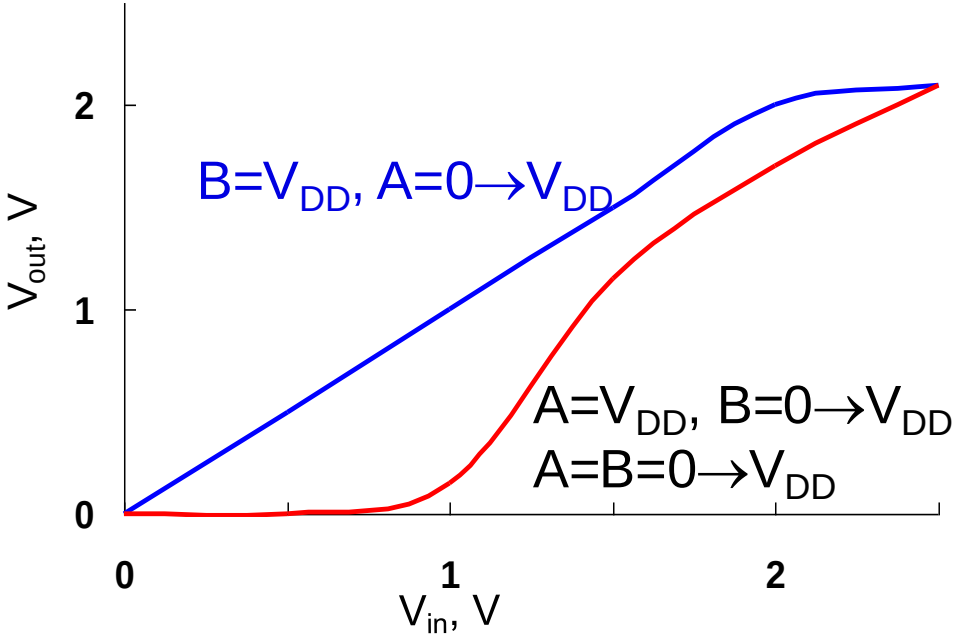


- Be data-dependent
- Pure PT logic is not regenerative - the signal gradually degrades after passing through a number of PTs (can fix with static CMOS inverter insertion)

# Differential PT Logic (CPL/DPL)

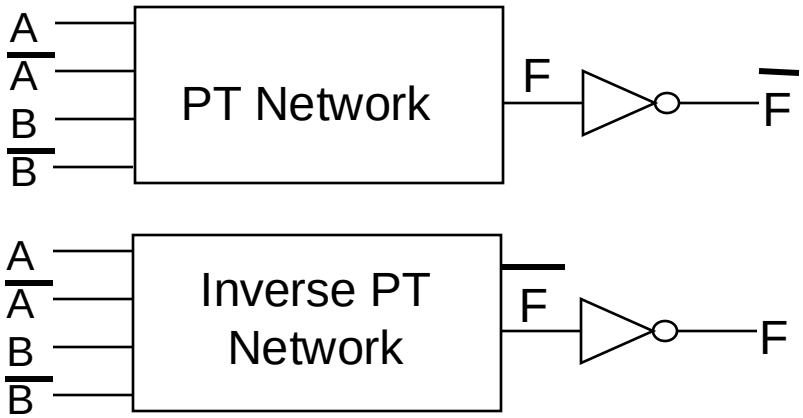


**CPL：Complementary Pass-transistor Logic**

- Complementary data input/ output
- Static gates
- Modular

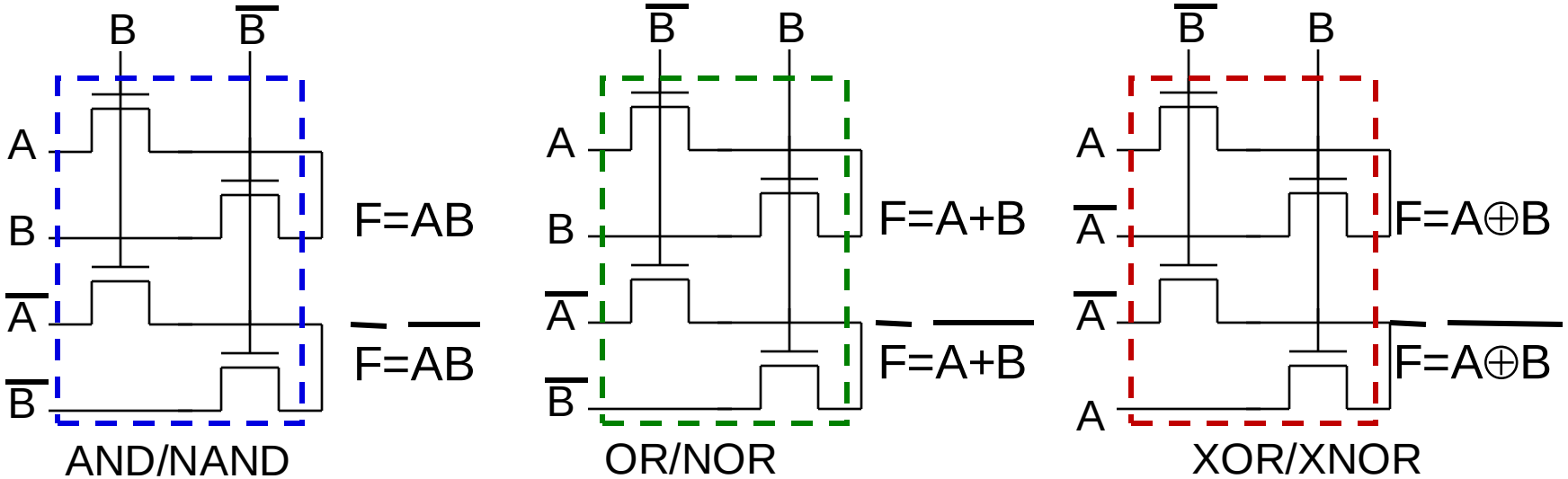

# Four-input NAND in CPL

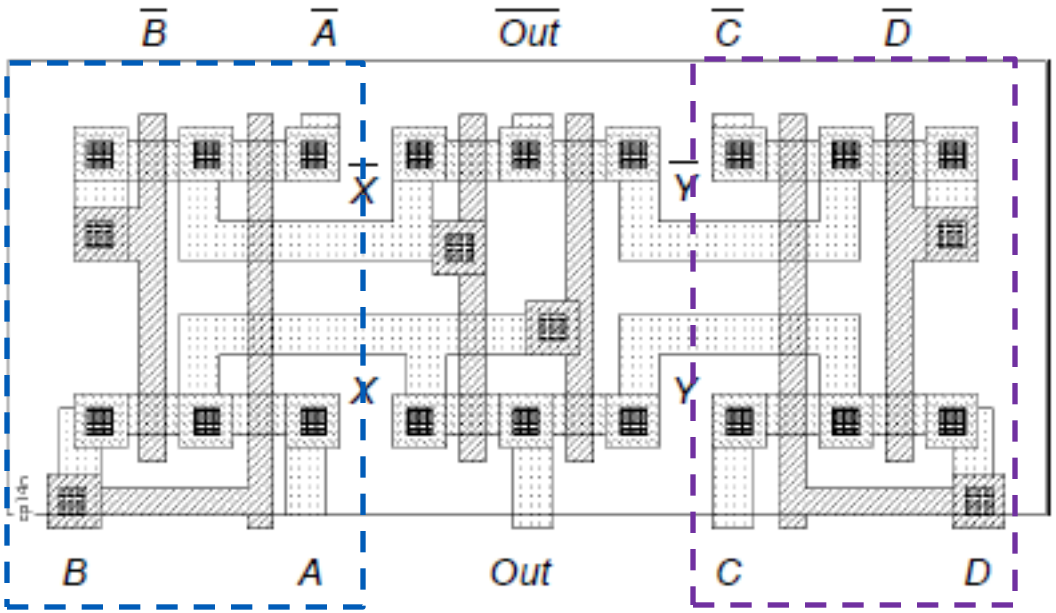


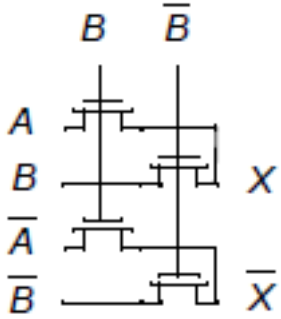


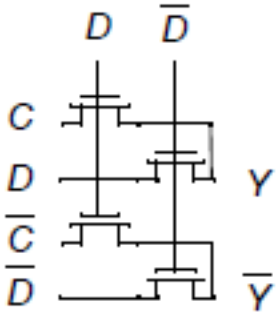


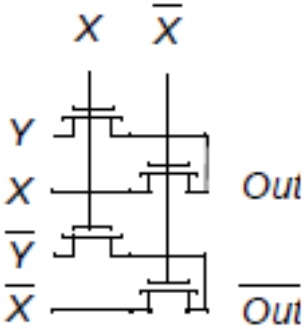

# NMOS-Only Pass-transistor

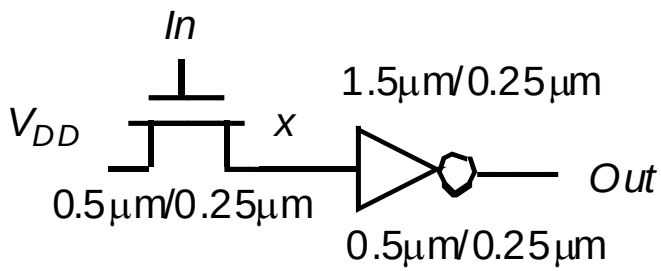


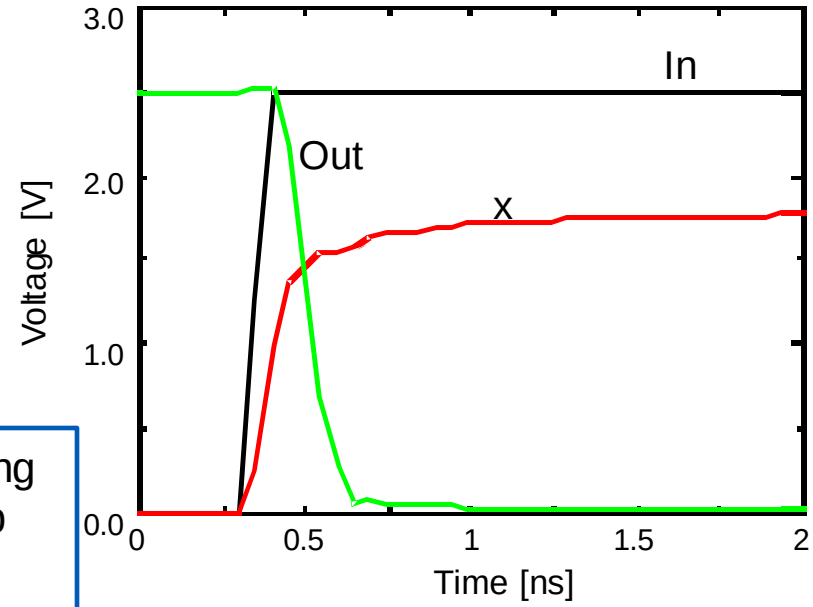


***Strong for "0"; weak for "1"***

- Body effect – large $V_{SB}$ at x - when pulling high (B is tied to GND and S charged up close to $V_{DD}$)
- $V_x = V_{DD} - (V_{Tn0} + \gamma(\sqrt{(|2\phi_f| + V_x)} - \sqrt{|2\phi_f|}))$

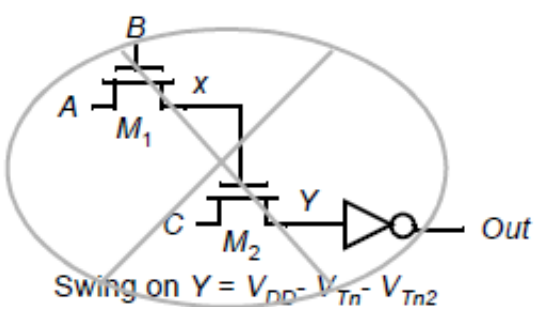


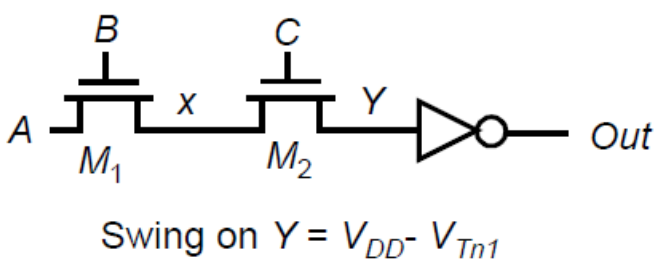

# Robust and Efficient PT Design

- Solution 1: Level Restoring Transistor
- Solution 2: Multiple-Threshold Transistor
- **Solution 3: Transmission Gate(TG)** ✓

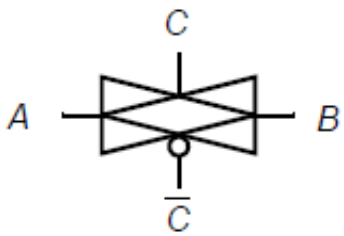


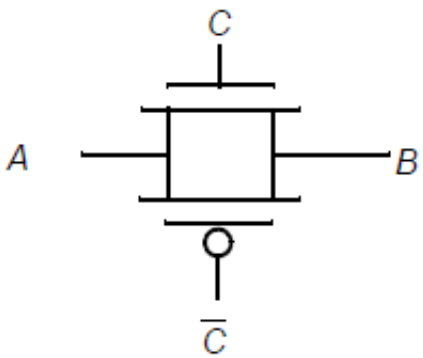


**If C=1, B=A**
**If C=0, cutoff**

NMOS: strong 0; weak 1

PMOS: strong 1; weak 0

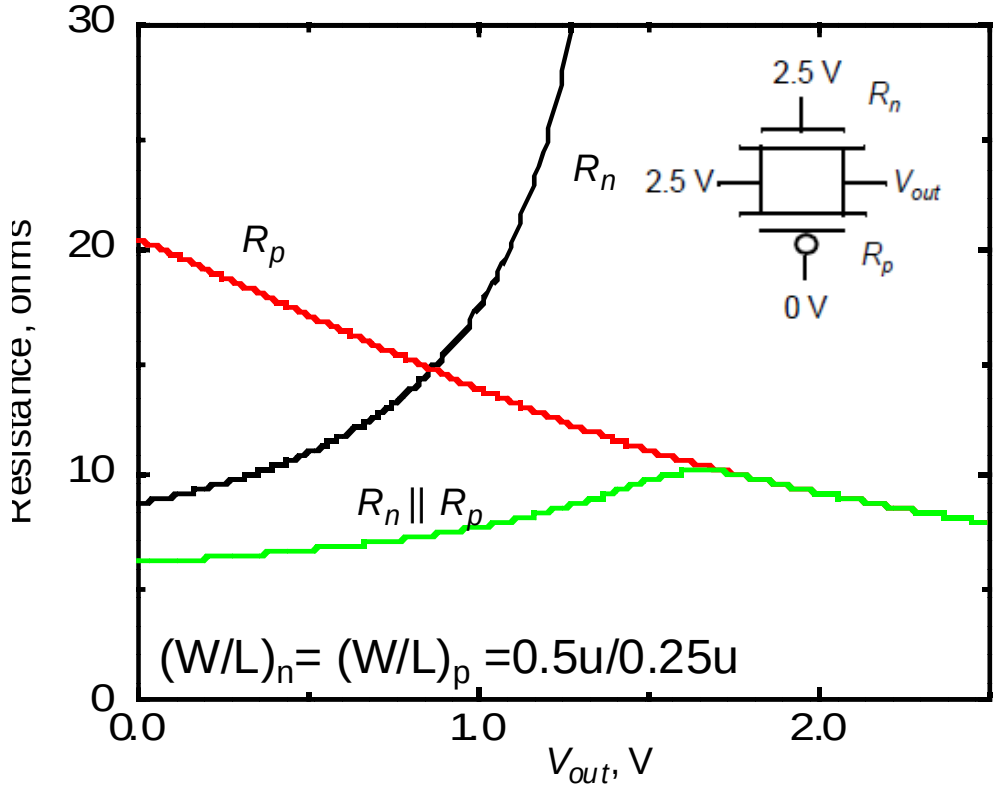

# Transmission Gate: Example

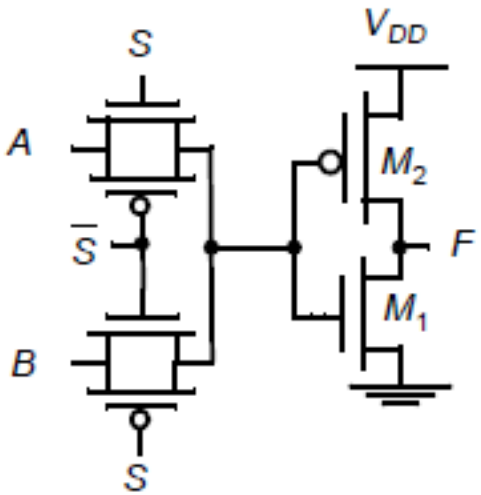


**Transmission gate: Multiplexer**

$$\overline{\overline{F}} = (A \cdot S + B \cdot \overline{S})$$

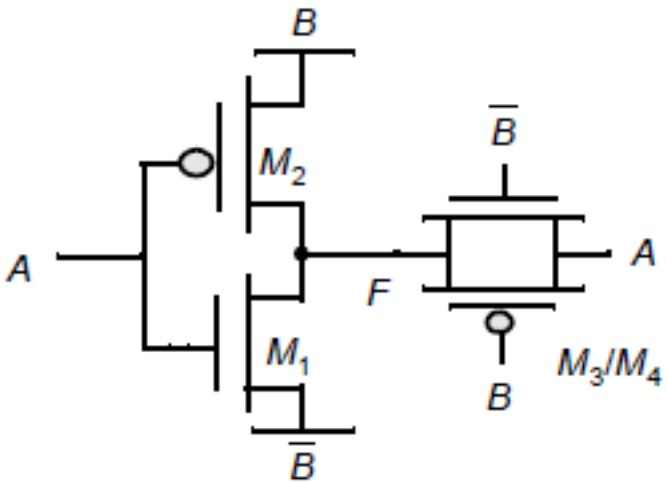


**XOR**

# Delay in Transmission Gate Networks

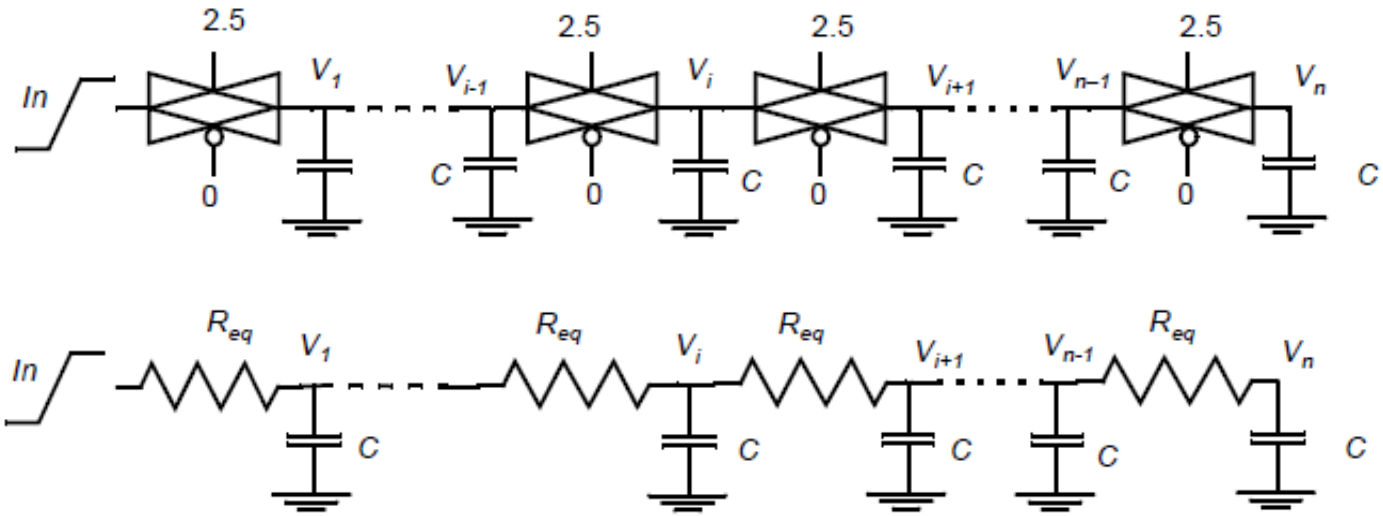


- Delay of RC Chain $$t_p(V_n) = 0.69 \sum_{k=0}^{n} CR_{eq}k = 0.69 CR_{eq} \frac{n(n+1)}{2}$$

  The propagation delay is proportional to $n^2$ and increased rapidly with the switches in the chain.

- Delay optimization: break the chain and insert buffers every *m* switches

# TG Networks : Delay Optimization

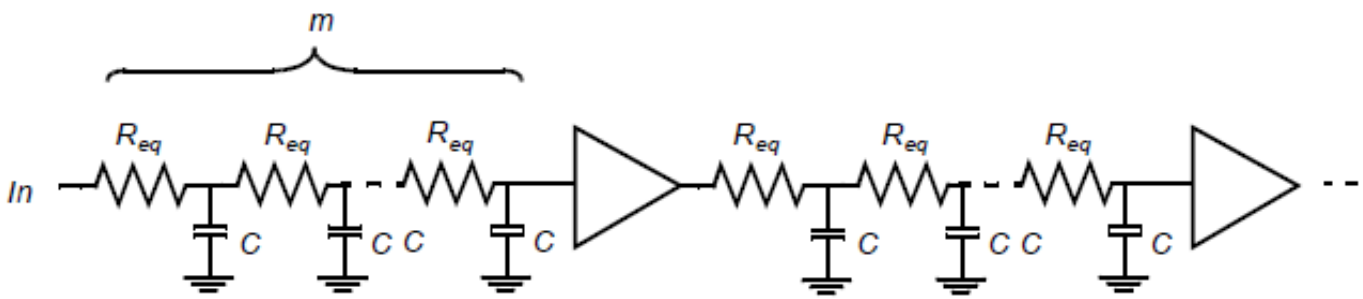


- Delay of Buffered Chain

$$t_p = 0.69\left[\frac{n}{m}CR_{eq}\frac{m(m+1)}{2}\right] + \left(\frac{n}{m} - 1\right)t_{buf}$$

$$= 0.69\left[CR_{eq}\frac{n(m+1)}{2}\right] + \left(\frac{n}{m} - 1\right)t_{buf} \Rightarrow m_{opt} = 1.7\sqrt{\frac{t_{pbuf}}{CR_{eq}}}$$

***m*=3 or 4**

The number of switches per segment grows with increasing values of $t_{buf}$.

# Outline

- Static CMOS Design
- Dynamic CMOS Design
  - Dynamic  Logic: Basic Principles
  - Speed and Power Dissipation of Dynamic Logic
  - Cascading Dynamic Gates

# Dynamic CMOS

- In static circuits at every point in time (except when switching) the output is connected to either GND or $V_{DD}$ via a low resistance path.
  - Complementary: fan-in of N requires 2N devices
  - Pseudo-NMOS: fan-in of N requires N+1 devices
- Dynamic circuits rely on the temporary storage of signal values on the capacitance of high impedance nodes.
  - requires only N+2 transistors
  - takes a sequence: precharge phase, conditional evaluation phases

# Dynamic Gate

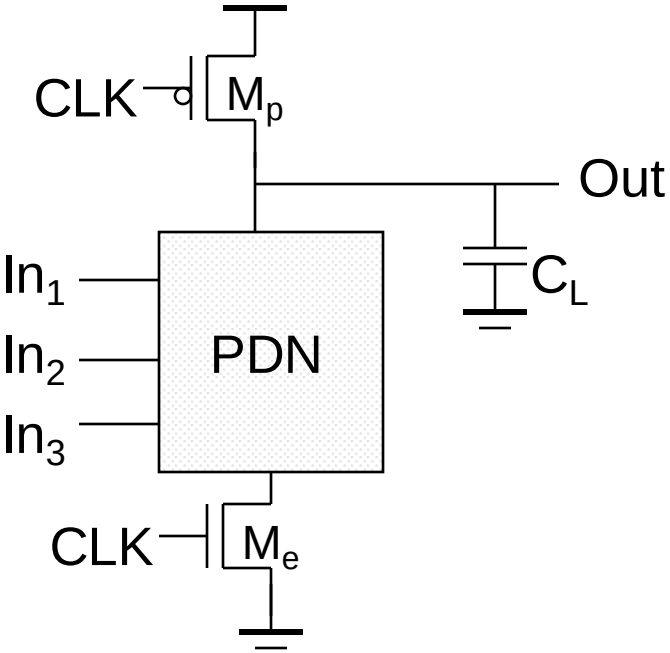


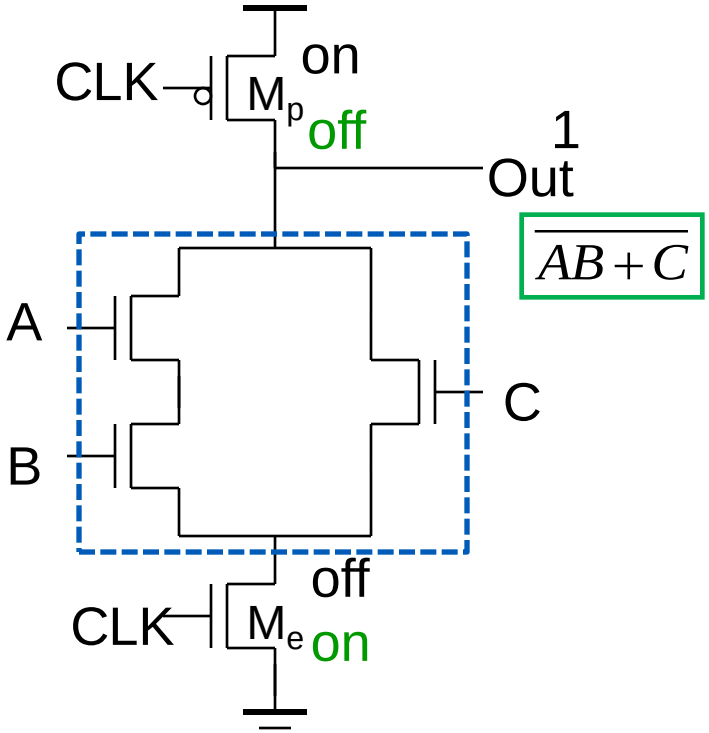


**Two phase operation:**

**-- Precharge (CLK = 0)**

**-- Evaluate (CLK = 1)**

$$Out = \overline{CLK} + \overline{(AB + C)} \cdot CLK$$

# Conditions on Output

- Once the output of a dynamic gate is discharged, it cannot be charged again until the next precharge operation.
- Inputs to the gate can make at most one transition during evaluation.
- Output can be in the high impedance state during and after evaluation (PDN off), state is stored on $C_L$

# Properties of Dynamic Gates

- Logic function is implemented by the PDN only
  - transistors number: **N+2** (vs. static complementary CMOS: 2N)
  - be **smaller** in area
- Full swing outputs: $V_{OL}$=GND, $V_{OH}$=$V_{DD}$
- Nonratioed - sizing of PMOS is not important for proper functioning (only for performance)
- Faster switching speeds *(charge leakage)*
- Power dissipation should be better
  - only dynamic power – no short circuit power consumption since the pull-up path is not on when evaluating
  - lower $C_L$- $C_{int}$ (fewer transistors connected to the drain output)
    - $C_{ext}$ (output load is one per connected gate, not two)
  - by construction can have at most one transition per cycle – no glitching
- Needs a precharge clock

# Dynamic Behavior

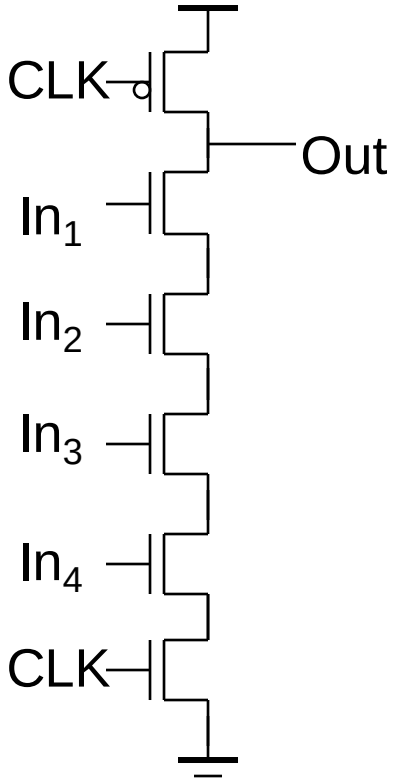


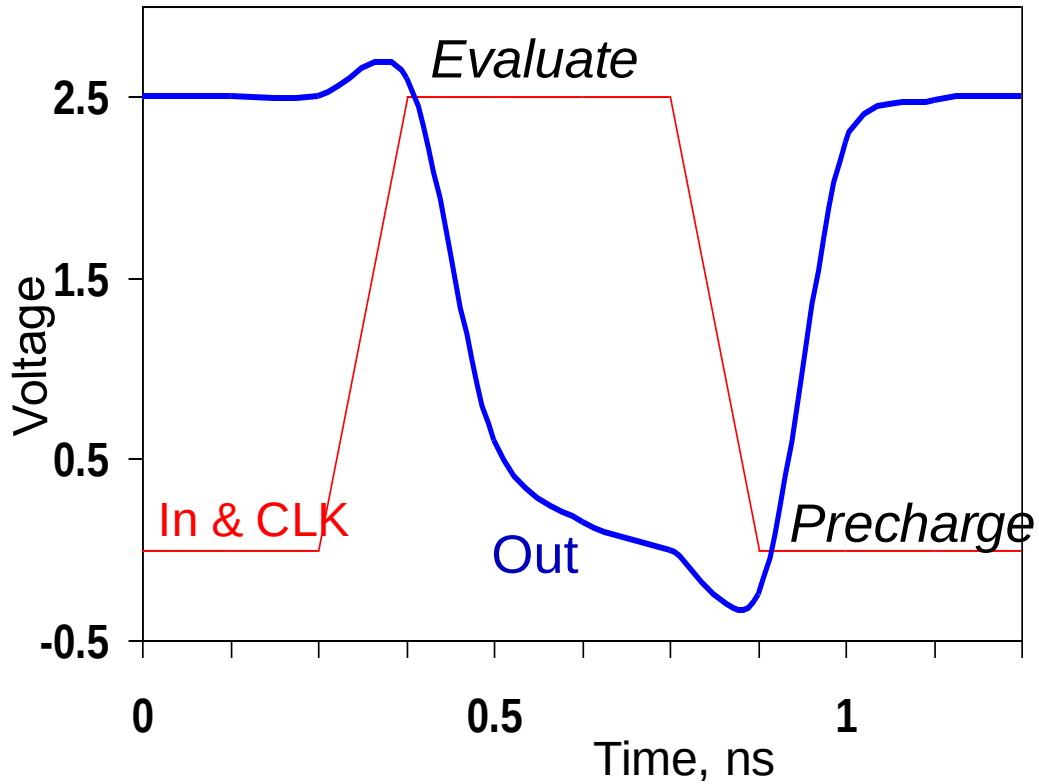

# Power Consumption

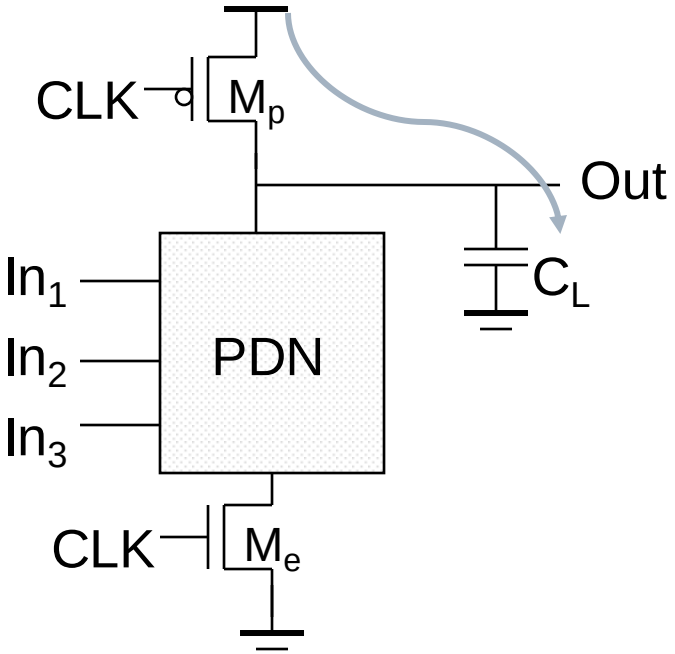


Power only dissipated
when previous Out = 0

# Dynamic Power Consumption: Data Dependent

## Dynamic 2-input NOR Gate

| A | B | Out |
|---|---|---|
| 0 | 0 | 1 |
| 0 | 1 | 0 |
| 1 | 0 | 0 |
| 1 | 1 | 0 |

Assume signal probabilities

$P_{A=1} = 1/2$

$P_{B=1} = 1/2$

Then transition probability

$P_{0\rightarrow1} = P_{out=0} \times P_{out=1}$

$= 3/4 \times 1/4 = 3/16$

Switching activity can be higher in dynamic gates!

$\mathbf{P_{0\rightarrow1} = P_{out=0}}$

# Issues in Dynamic Design: Charge Leakage

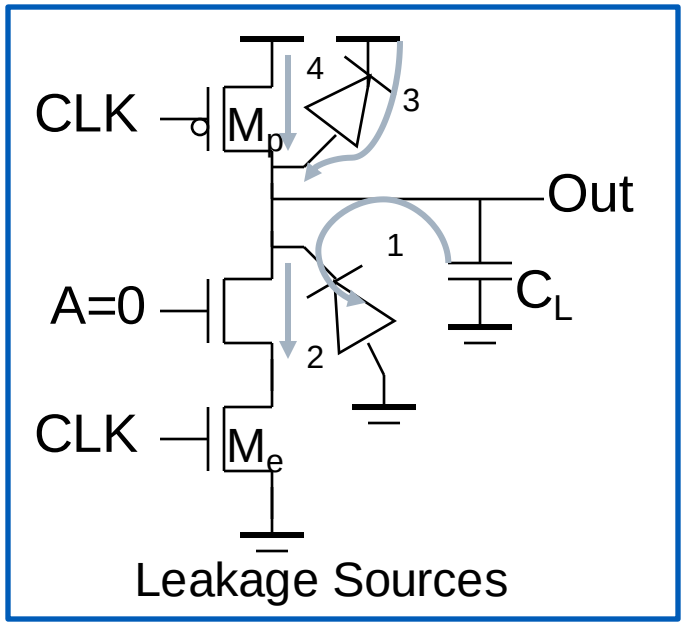


Minimum clock rate of a few kHz

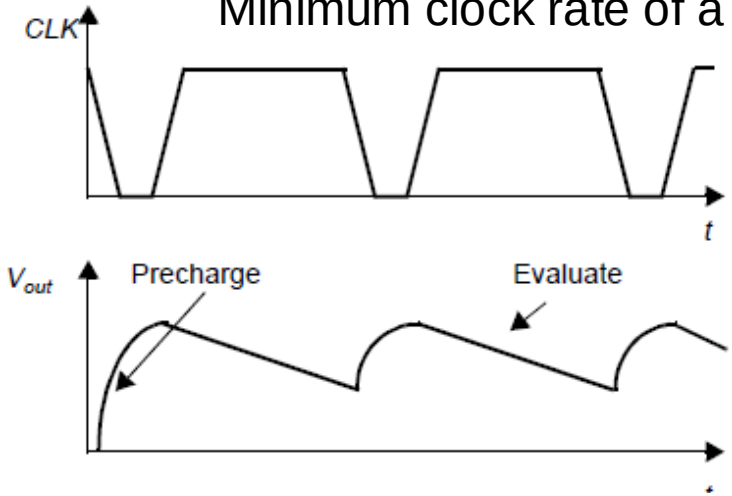


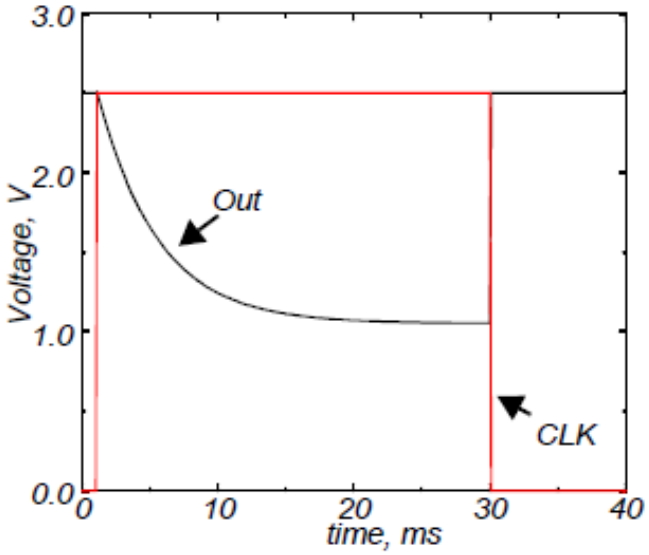


Output settles to an intermediate voltage determined by a resistive divider of the pull-up and pull-down networks *(Once the output drops below $V_M$ of the fan-out logic gate, the output is interpreted as a low voltage)*

# Cascading Dynamic Gates

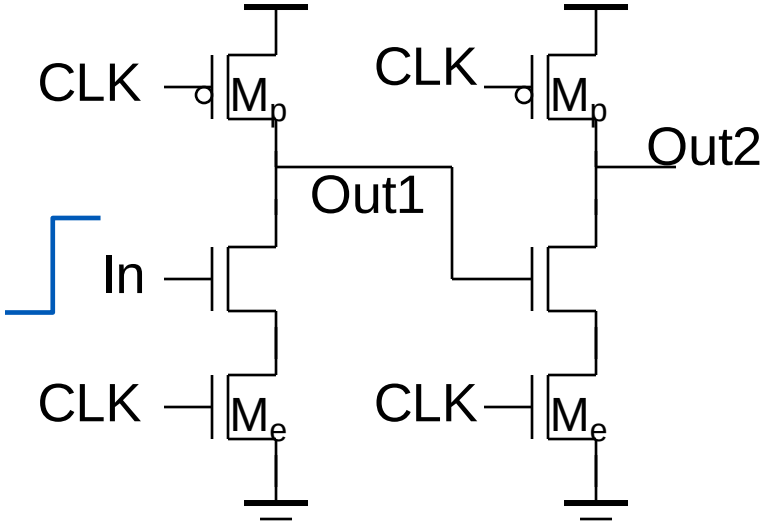


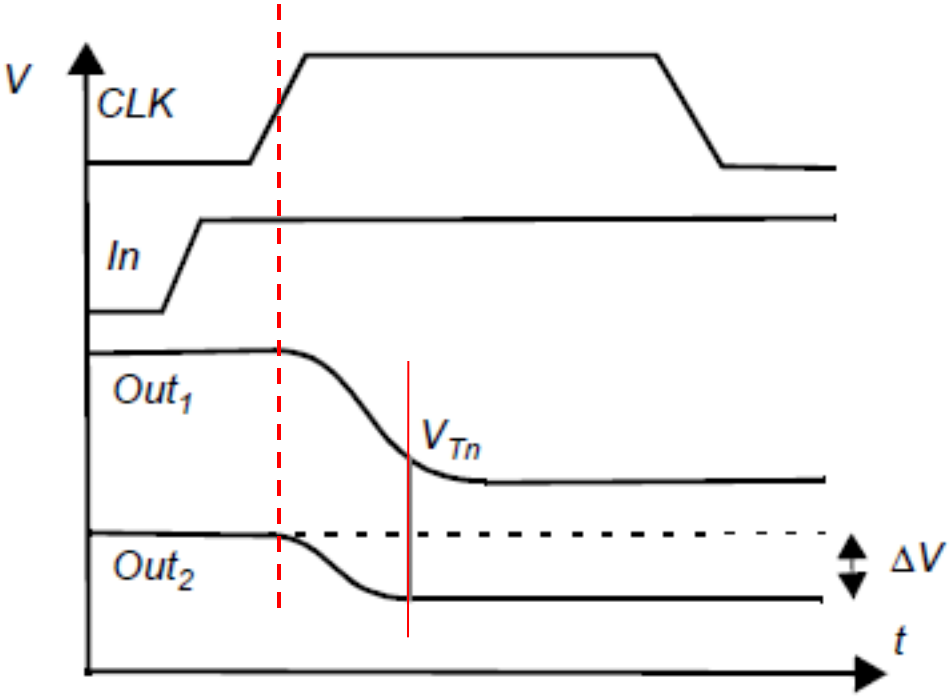


Only a single 0 → 1 transition allowed at the inputs during the evaluation period!

# Domino Logic

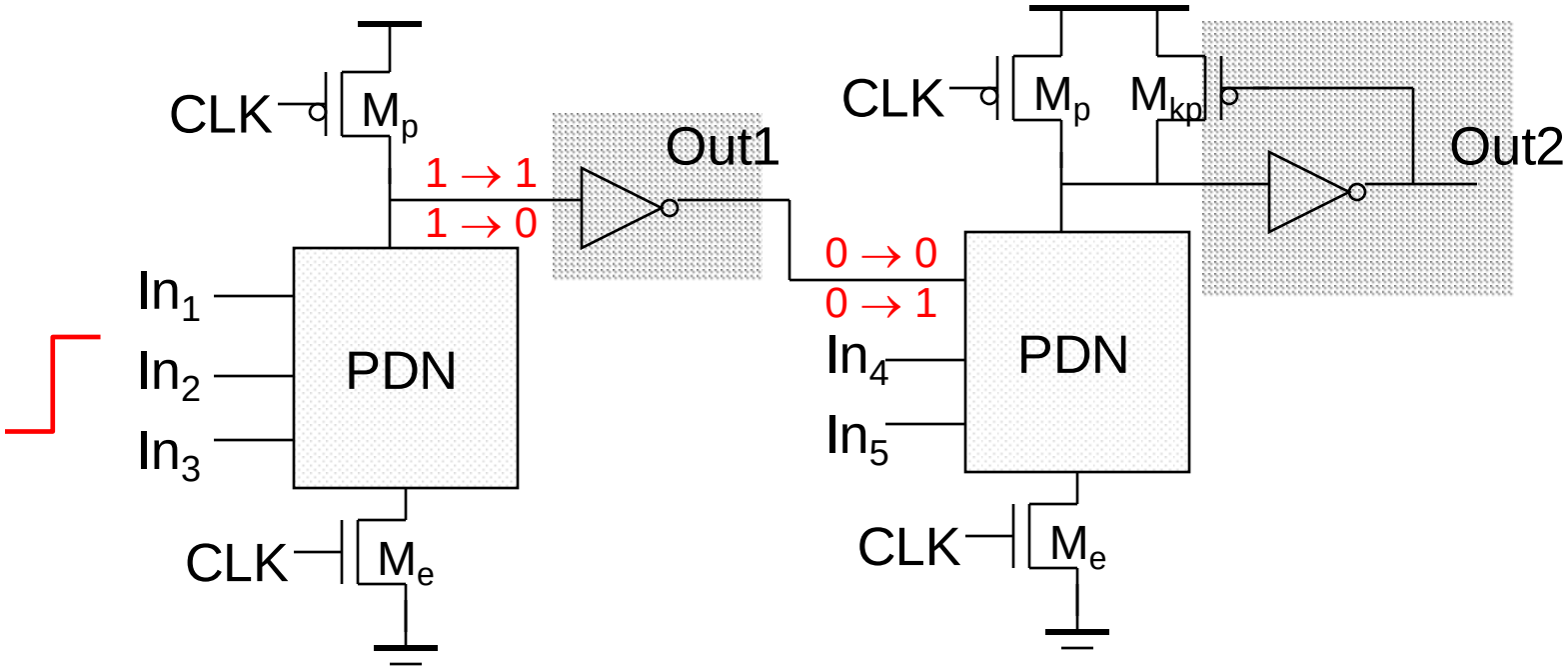


- Only non-inverting logic can be implemented
- Very high speed
  - static inverter can be skewed, only L-H transition
  - Input capacitance reduced – smaller logical effort

# Designing with Domino Logic

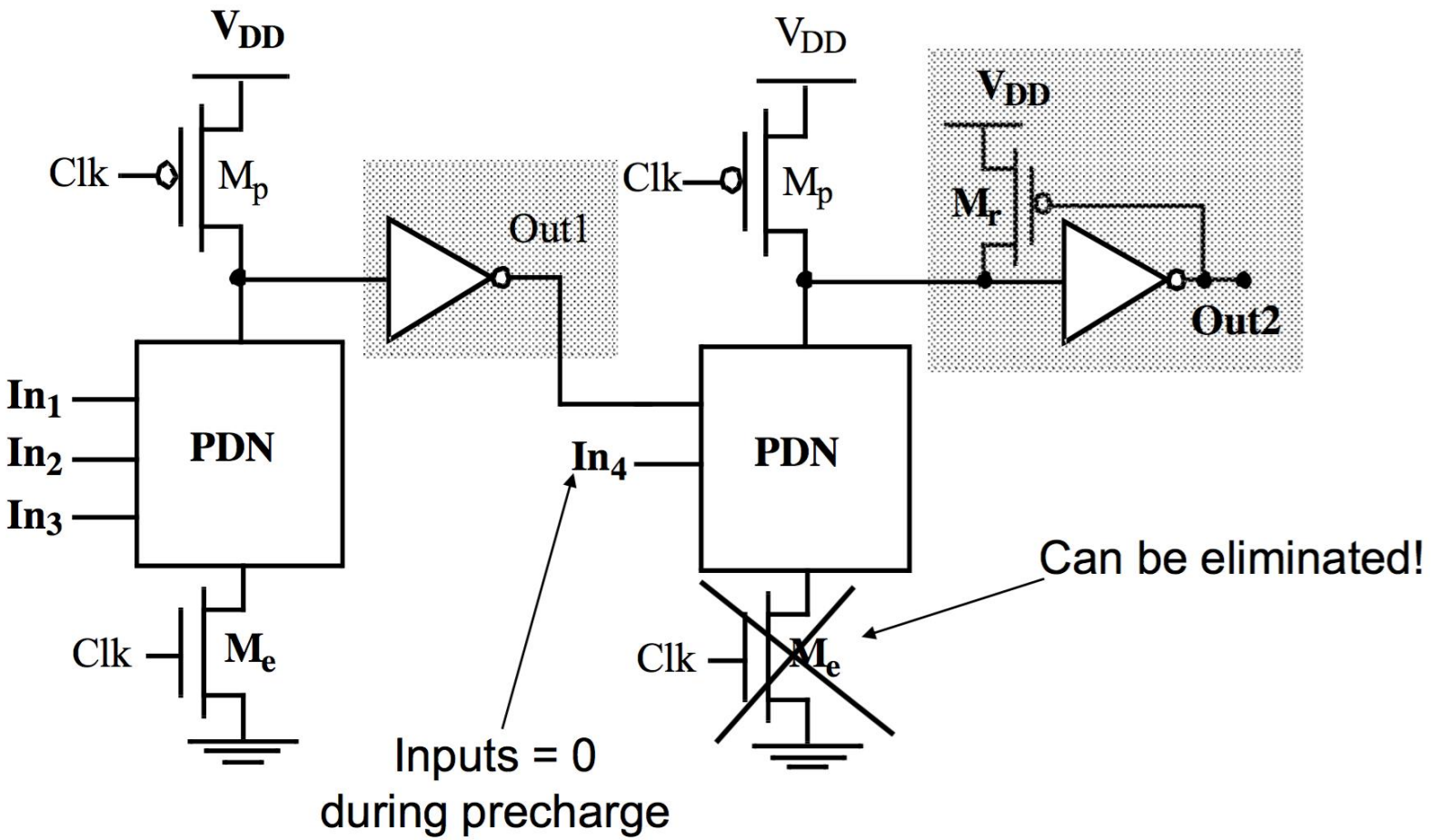

# Footless Domino

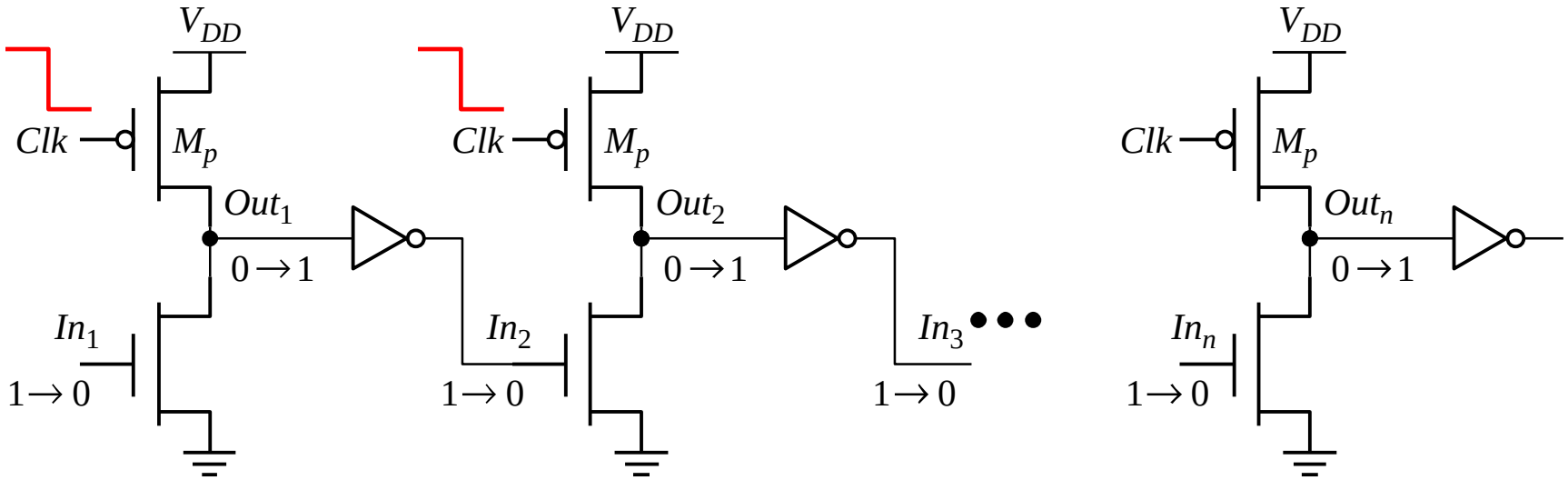


- The first gate in the chain needs a foot switch
  Precharge is rippling – short-circuit current
- A solution is to delay the clock for each stage

# Properties of Domino Gates

- Logic function is implemented by the PDN only requires N + 2 transistors (vs. static complementary CMOS：2N)
- Be smaller in area (vs. static complementary CMOS)
- Full swing outputs ($V_{OL}$ = GND and $V_{OH}$ = VDD)
- Faster switching speeds:

  $C_{int}$ reduced (fewer transistors connected to the drain output)

  $C_{ext}$ (output load is one per connected gate, not two)
- **Inverter is required**
- Needs a precharge clock.

# Summary

- Static complementary CMOS combines dual PDN and PUN networks. The performance of a CMOS gate is a strong function of the fan-in, and also is a function of the fan-out.
- The ratioed logic style consists of an active pull-down network connected to a load device.
- Pass-transistor logic implements a logic gate as a simple switch network.
- Dynamic logic: a two-phase scheme consisting of a precharge followed by an evaluation step.

- Current trend is towards an increased use of **complementary static CMOS**: design support through EDA tools, robust, more amenable to voltage scaling.

# 集成电路原理与设计
# 组合逻辑门

谭志超
zhichaotan@zju.edu.cn