Semi-supervised learning on Lightweight OpenPose

Hongyi Jing[1,4], **Xianjing Huang**[2] **and Xinglin Guo**[3]

[1] School of Artificial Intelligence and Automation, Huazhong University of Science and Technology, 1037 Luoyu Road, Wuhan, China
[2] Electronic Information School, Wuhan University, 129 Luoyu Road, Wuhan, China
[3] Faculty of Science and Engineering, University of Nottingham Ningbo China, 199 Taikang East Road Ningbo, 315100, China
[4] Corresponding author
u202015174@hust.edu.cn

Abstract. Supervised learning is often used in the pose recognition of people in pictures and videos. However, with a small dataset with labels, the trained models are not as accurate in estimating human pose. In this work, we used Lightweight OpenPose as the base network and introduced semi-supervised learning methods to improve the network's ability to learn from unlabelled data. A teacher-student system consisting of weak-strong augmentation strategy is used to avoid the model collapsing problem that may occur in semi-supervised learning. Compared with the original Lightweight OpenPose, the accuracy of the training set containing 5000 labelled data and 5000 unlabelled data is improved. On this basis, we tried two more methods: setting a threshold for the predicted value and ST++.Compared with the original semi-supervised learning, the model accuracy of these two methods is improved when the ratio of labelled to unlabeled data is 1:1 and 1:3.

1. Introduction

1.1. Background

Multi-person pose estimation in 2D has important practical applications in multiple fields, such as action recognition [1] and motion capture in the movie industry [2]. The main function of person pose estimation is to generate a set of pose skeleton for each human body in the input image or video based on the pre-trained model. The skeleton is composed of key points that are easily identified by the human body in motion, such as the eyes, knees, elbows, etc. Currently, human pose estimation has a high accuracy based on the application of convolutional neural networks (CNNs) [3], [4], [5] and heat maps. OpenPose is one of the representative and popular methods [6]. However, mainstream pose estimation methods rarely achieve both compact and efficient. Lightweight OpenPose [7] optimizes OpenPose. Based on the OpenPose structure, the Lightweight OpenPose method retains heat maps and Part Affinity Fields and uses a lighter Mobilenet-V1 [8]-based convolutional neural network to replace the original VGG-19 [9] feature extractor. Mobilenet-V1 [8] reduces the parameters of the neural network and maintains the receptive field by using depthwise separable convolution and dilated convolution. Lightweight OpenPose removes the layers of OpenPose that have a small improvement in accuracy but requires a large amount of computation. These methods reduce the network complexity and significantly improves the computational speed with little change in accuracy.

1.2. Existing problem

Using supervised learning, Lightweight OpenPose uses a large amount of labelled data from the COCO2017 dataset to train the model. However, our team found that with less labelled data in the training set, the accuracy of the model would drop a lot. Based on unlabelled data, manually labelling the data will be a huge work. The data we have may consist of a small amount of labelled data and a larger amount of unlabelled data.

1.2. Solution

In this case, our team want to extend the original Lightweight OpenPose based on semi-supervised learning to enable relatively accurate recognition of human poses despite the scarcity of labelled datasets. We introduce a semi-supervised learning scheme from paper [10], for pose estimation which leverages strong and weak augmentations to train student and teacher networks. Based on the method proposed in [10], We selected labelled part and unlabelled part data from the COCO2017 dataset. A small amount of labelled data is input into Lightweight OpenPose to get a preliminary model. The strong and weak augmentation data generated by this model will constitute the student and teacher networks.

Our main contributions are:

- Exploring semi-supervised learning method based on FixMatch [13] to Lightweight OpenPose. Before calculating the loss, adopting the detach operator on the teacher signals can avoid collapsing.
- Setting the threshold value to ignore the key points that the predicted value is too low during training. Avoid the model to learn data from bad pseudo labels.
- Applying another semi-supervised learning method based on ST++ [14]. Pre-trained models on labelled data make pseudo labels more accurate.

These attempts all achieved a degree of improvement in accuracy.

2. Related Work

Our work focuses on human pose estimation and semi-supervised algorithms.

2.1. Pose estimation

CPN (Cascaded Pyramid Network) [15] is very influential in pose estimation. It adopts a top-down method. Firstly, a human detector is used on the image to attain the bounding-boxes of people, and then the key points are detected. For multi-person pose estimation, CPN uses Cascaded Pyramid Network to detect the points that are difficult to be identified by surface features. OpenPose [6] adopts a bottom-up detection method, which first detects all key points to form Part confidence map, and then forms skeleton according to part affinity fields. Compared with top-down, the method of bottom-up can quickly estimate images containing multiple people. Lightweight OpenPose simplifies OpenPose, reducing computation time with minimal accuracy reduction.

2.2. Semi-supervised learning

MixMatch [11] is a representative method in semi-supervised learning. This method averages the labels obtained by different data enhancement of the samples, and then sharpens them to obtain pseudo label. Using mixup [12] enhancement method, the loss function is calculated by mixing the labelled data and the unlabelled data. FixMatch [13] semi-supervised learning method has higher accuracy than MixMatch [11]. A picture can be enhanced to different degrees. In a specific task, it is more difficult to extract features from a picture that has been processed many times (strong enhancement) than the original picture or a picture that has been processed only once (weak enhancement). This means that the performance of the model on the same data set is easier to enhance than difficult to enhance. Therefore, the tags that are easily enhanced can be used as pseudo label to calculate the loss function of the unlabelled data. At the same time, a threshold value about the prediction confidence will be set for filtering sufficiently trusted pseudo tags. ST++ [14] optimizes the traditional multi-stage self-

training paradigm. The model is trained on labelled images to ensure the quality of the pseudo-labels, and only needs to predict the unlabelled images once. At the same time, the unlabelled data are randomly augmented, and the pseudo-labels and unlabelled images are gradually used according to the reliability of the labels. Our work follows the idea of FixMatch [13] and ST++ [14].

3. Method

3.1. The improvement of Lightweight OpenPose

In this work, we probed into the problem of human pose estimation based on the Lightweight OpenPose network [7]. The Lightweight OpenPose network uses both heatmaps and PAFs (part affinity fields) in human pose estimation just like the OpenPose network [6] does. However, the Lightweight OpenPose network uses Mobilenet-v1 [8] to replace the Vgg-19 [9] net as the backbone and remains only the first refinement stage of the OpenPose since there are no significant improvements on AP and GFLOPS increases greatly in the following other refinement stages. In addition, the Lightweight OpenPose uses weight sharing in the first few layers of the initial stage which helps to reduce the amounts of parameters in the network.

Consequently, the Lightweight OpenPose reaches nearly the same level of average precision with the OpenPose network and requires less resources in running the algorithm.

3.2. Application of semi-supervised learning

Considering that the generalization of the model will be reduced when labelled images are insufficient or the application scenario is quite different from the training data, we introduce semi-supervised learning (SSL). However, traditional consistency-based SSL models could not achieve good results when applied to human pose estimation whose class distribution is greatly imbalanced as introduced in [10]. We followed [10] and introduced the concept of weak-strong augmentation pairs. In effect, the network should attain more accurate average precision on a specific dataset with weak augmentation than on that same dataset with strong augmentation. As a result, for unlabelled images, we treat the predictions on the weak augmentation as the "teacher" so that the network could learn about the corresponding strong augmentation and then be monotonically improved.

For the weak augmentation, we implement affine transformation on the input images ("teacher") and send them to the network to generate heatmaps and PAFs as ground truth. For the strong augmentation, we implement joints cut-out on the same images ("student") and send them to the net again to get the predictions.

The heatmaps and PAFs of "student" images will be compared with the output of "teacher" images to compute the loss. It should be noted that adopting the detach operator on the teacher images before calculating the loss is needed. This is to prevent strong augmentation from teaching the network to only learn about the weak augmentation so that it prevents collapsing. And losses also include those of both the labelled images and unlabelled images to allow network to learn their features at the same time:

$$L = L^s + \gamma L^u \tag{1}$$

where L^s is the supervised loss and L^u is the unsupervised loss.

3.3. Setting of threshold

When the number of iterations of the training model is small, the prediction of some key points in the training picture is not accurate. If the inaccurate key points in the "teacher" image is used as the criterion, the model will not obtain high accuracy. Inspired by FixMatch [13], we introduce the concept of threshold into our SSL model to filter out images with inaccurate predictions.

In our work, every picture will get its predicted key point maps through the network, and the range of the value in the heatmap is concentrated between 0 and 1. The predicted value represents the degree of confidence of the model that a point is a key point.

We tried 2 different methods when applying the threshold to our network: (1) when there are less than 5 key points with a predicted value greater than the threshold in the picture passing through the network, the picture will be ignored so as to avoid the wrong direction in the direction. (2) every key point with a predicted value smaller than the threshold in one picture will be ignored while other key points in that picture will still be used to compute the loss. Our algorithm applying the threshold is shown in figure 1. After comparing these two methods in the experiments, we find that the second method could reach a higher average precision after training as shown in figure 2. This is because when we ignore one image in the first method, the key points with a high value in that image would also be ignored and the network would therefore have fewer datasets to learn from.

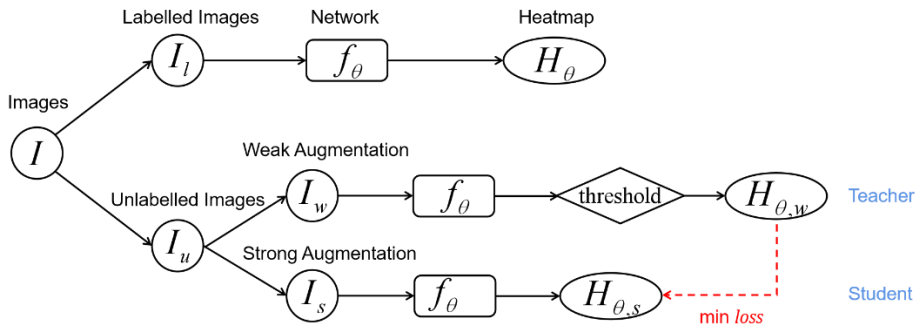

Figure 1. The architecture of our method to introduce threshold in semi-supervised human pose estimation.

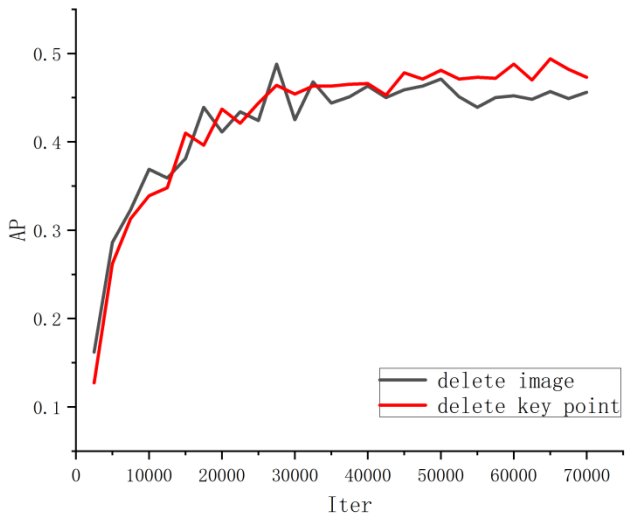

Figure 2. Results of two methods applying the threshold.

3.4. Use of ST++

Apart from setting thresholds during the process of weak-strong augmentation, we also tried to introduce ST++ [14] to our SSL model and achieved good results:

1. Train the network only on the labelled datasets and get K checkpoints $\{T_j\}_{j=1}^{K}$ in the training process.
2. For each unlabelled image u_i, predict the pseudo labels of u_i using those K checkpoints $\{T_j\}_{j=1}^{K}$ to obtain $\{M_{ij}\}_{j=1}^{K}$and compute scores of each image by using:

$$S_i = \sum_{j=1}^{K-1} loss(M_{ij}, M_{iK}) \tag{2}$$

3. Sort the unlabelled datasets using the scores and half of the datasets with lower scores are treated as reliable datasets D^r since their pseudo labels change slightly in the training process, while another half of datasets are treated as unreliable datasets D^{unr}.
4. For each unlabelled image u_i in D^r, predict its pseudo label using $T_K$and train them with labelled datasets to get another K checkpoints $\{R_j\}_{j=1}^{K}$ Use R_K to predict the pseudo labels of images in D^{unr} and then every unlabelled image has its own pseudo label.
5. Train labelled datasets, reliable unlabelled datasets and unreliable unlabelled datasets together and total loss L can be formulated as:

$$L = L^s + \gamma L^r + \gamma L^{unr} \tag{3}$$

where L^s is the supervised loss and L^r, L^{unr} are both unsupervised losses.
The architecture of our algorithm based on ST++ is shown in figure 3.

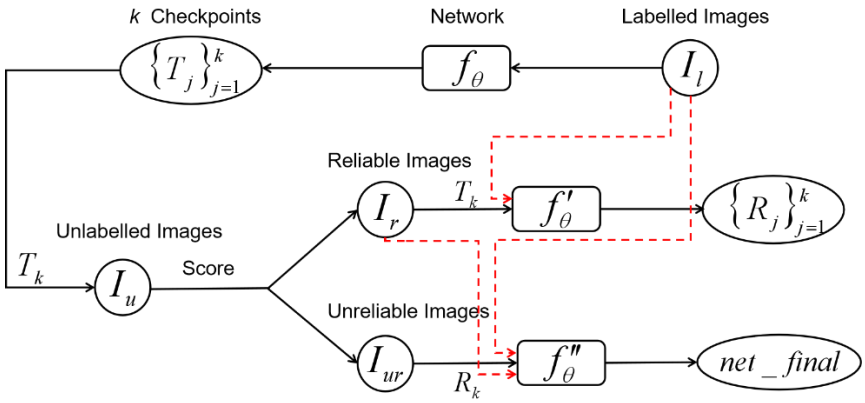

Figure 3. The architecture of our means to introduce ST++ in semi-supervised human pose estimation.

4. Experiments

4.1. Setup

Dataset. COCO 2017 is composed of 118K images for training and 5K images for validation originally. We pick some pictures in the training set randomly and their annotations as labelled data and select images that ignore annotations as unlabeled data. We change the ratio of labelled data and unlabeled data in different experiments but guarantee that the total number was 10K.
Network structure. We use Mobilenet-V1 as our network structure which is more lightweight.
Implementation details. The supervised pre-training and semi-supervised re-training share the same hyper-parameters. Specifically, the batch size is set as 20 with one NVIDIA RTX A5000 GPU. We train the model for 280 epochs. We use the Adam optimizer for training and the initial learning rate of the backbones is set as 4e-5. We also adopt the MultiStepLR scheduler to attenuate the learning rate in the specified interval. As for unlabelled images, we use weak and strong augmentation respectively. To applying weak augmentation method, we randomly flip the images and crop them to 368×368. For the strong augmentation method, we choose joints cut-out which randomly covers up some parts near the joints. And these parts are not considered when calculating loss. In the experiments of adding threshold, we test both static threshold and dynamic threshold. We use 0.2 as the fixed threshold and half of the mean of the prediction confidence as the flexible threshold, respectively. In the experiments of ST++, we preserve twenty checkpoints uniformly during training and use them to help evaluate the reliability of the image data. The top 50% highest rated images are those more reliable and we train them with higher priority.

4.2. Comparison with State-of-the-Art Methods

Two semi-supervised learning frameworks based on Lightweight OpenPose are proposed in this work: one applies threshold, and the other introduces ST++ in human pose estimation (HPE). In this section, we make a comparison between both of our frameworks and previous methods in HPE.

Applying threshold in HPE. Previous works in HPE uniformly use every image from the dataset without filtering. Considering that low-quality unlabelled data may be unfavorable to the model training, we apply threshold to calculate unsupervised loss using only unlabeled data with prediction confidence above the threshold. As shown in Table 1, we test two thresholds and our proposed models with each of them both outperform existing method without threshold. Moreover, the significant difference between our models and the supervised only results demonstrates our efficient utilization of a large number of unlabeled images.

Applying ST++ in HPE. We also introduce ST++ in HPE to treat images with different prediction confidence differently and exploit them more reasonably. As shown in Figure 4, our model with ST++ gains a better result than the state-of-the-art. It is also worth noting that this model's convergence rate is the fastest among previous methods and our model using threshold.

Discussions. The use of threshold has been paid attention and widely studied in many fields, for instance, semantic segmentation and image classification. Nevertheless, this is not commonly seen in the HPE field. Due to HPE's own characteristics, using threshold to do screening will be quite different from existing methods. The experience gained from our experiment is that the threshold value should not be too large, and we can get better results when we select it around 0.2. The dynamic threshold has great potential, and the specific selection method needs to be further explored. ST++ performs well in semantic segmentation task. When introduced in HPE, it also helps improve accuracy and significantly boosts the convergence speed. The two methods we proposed with 5K labelled images even surpass the fully-supervised setting. In the specific demonstration in Figure 5, it shows that our two methods could accurately predict the correct position of the feet and perform better in more complex elbow postures.

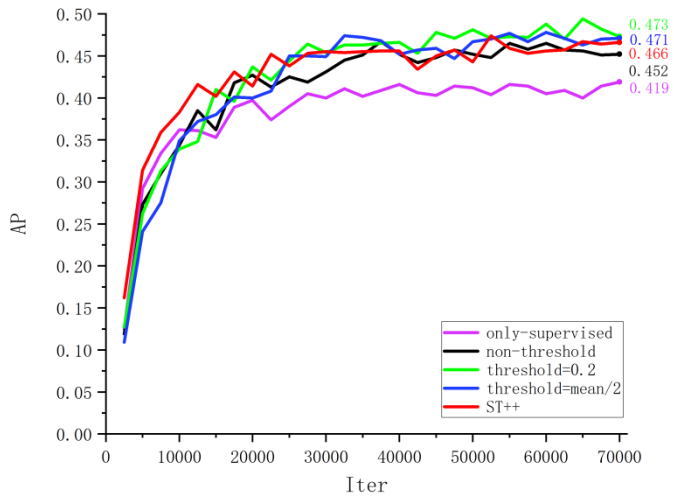

Figure 4. Effectiveness of each method.

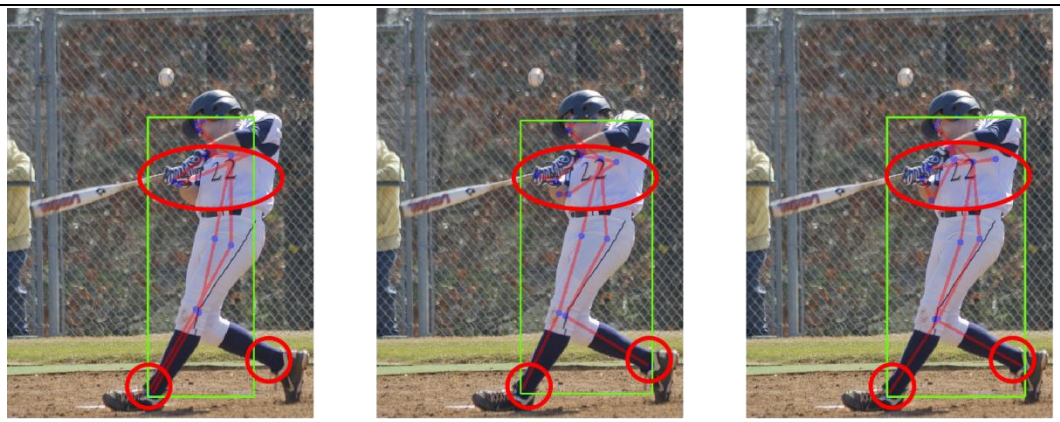

(A) (B) (C)

Figure 5. Visualization results of different methods: (A) uses model with non-threshold; (B) applies 0.2 as threshold; (C) introduces ST++.

Table 1. The value of AP of 280 epochs in different methods

Method	Labelled: Unlabeled	
	1:1 (5000:5000)	1:3 (2500:7500)
Only supervised	0.419	0.372
Non-threshold	0.452	0.405
Threshold=0.2	**0.473**	**0.429**
Threshold=mean/2	**0.471**	**0.416**
ST++	**0.466**	**0.434**
Fully supervised (10000 images): 0.464		

5. Conclusion

In this paper, we explore the issue of human pose estimation network using semi-supervised learning. We add semi-supervised learning to Lightweight OpenPose, which combines unlabeled data with strong and weak augmentation to form a teacher-student structure. We also set the threshold of the predicted value of image key points to further improve the accuracy. In addition, we also tried to apply the ST++ method to make the model converge faster and improve the accuracy.

Compared with classical nets in the field of pose estimation like VGG net, Resnet, HRnet, our model is more lightweight with less GFLOPs.

Compared with Lightweight OpenPose, we introduce the semi-supervised learning, and the AP is improved by 3.3 percentage points on the basis of model only trained on labelled dataset.

After adding the threshold in the training section, the AP could increase by a further 2.1 percentage points. When introducing ST++ [14], it helps significantly increase the convergence speed.

Changing the setting method of threshold or changing other network structures can further prefect the model accuracy. Changing the ratio of labelled data to unlabeled data will also have some different result. We leave these improvements for future research.

References

[1] Wang C, Wang Y and Yuille A L 2013 An approach to pose-based action recognition *Computer Vision and Pattern Recognition (CVPR), 2013 IEEE Conference on.* IEEE.

[2] Zhang Z, Wang C, Qin W and Zeng W 2020 Fusing wearable imus with multi-view images for human pose estimation: a geometric approach. *IEEE/CVF Conference on Computer Vision and Pattern Recognition (CVPR)* pp. 2197-2206 doi: 10.1109/CVPR42600.2020.00227.

[3] He K, Gkioxari G, Dollár P and Girshick R, 2017 Mask R-CNN *IEEE International Conference on Computer Vision (ICCV)* pp. 2980-2988, doi: 10.1109/ICCV.2017.322.

[4] Fang H S, Xie S, Tai Y W and Lu C 2017 RMPE: Regional Multi-person Pose Estimation *IEEE International Conference on Computer Vision (ICCV). IEEE.*

[5] Xiao B, Wu H and Wei Y 2018 Simple baselines for human pose estimation and tracking *arXiv e-prints* arXiv:1804.06208

[6] Zhe C, Simon T, Wei S E and Sheikh Y 2017 Realtime Multi-person 2D Pose Estimation Using Part Affinity Fields *IEEE Conference on Computer Vision and Pattern Recognition (CVPR). IEEE* pp. 1302-1310, doi: 10.1109/CVPR.2017.143

[7] Osokin D 2018 Real-time 2d multi-person pose estimation on cpu: lightweight openpose *arXiv e-prints* arXiv:1811.12004

[8] Howard A G, Zhu M, Chen B, Kalenichenko D, Wang W, Weyand T, Andreetto M and Adam H 2017 Mobilenets: efficient convolutional neural networks for mobile vision applications *arXiv e-prints* arXiv:1704.04861

[9] Simonyan K and Zisserman A 2014 Very deep convolutional networks for large-scale image recognition. In *ICLR*

[10] Xie R, Wang C, Zeng W and Wang Y 2020 Humble teacher and eager student: dual network learning for semi-supervised 2d human pose estimation *arXiv e-prints* arXiv:2011.12498

[11] Berthelot D, Carlini N, Goodfellow I, Papernot N, Oliver A and Raffel C 2019 Mixmatch: a holistic approach to semi-supervised learning *arXiv e-prints* arXiv:1905.02249

[12] Zhang H, Cisse M, Dauphin Y N and Lopez-Paz D 2017 Mixup: beyond empirical risk minimization *arXiv e-prints* arXiv.1710.09412

[13] Sohn K, Berthelot D, Li C L, Zhang Z, Carlini N and Cubuk E D et al 2020 FixMatch: Simplifying Semi-Supervised Learning with Consistency and Confidence *arXiv e-prints* arXiv:2001.07685

[14] Yang L, Zhuo W, Qi L, Shi Y and Gao Y 2021 St++: make self-training work better for semi-supervised semantic segmentation *arXiv e-prints* arXiv:2106.05095

[15] Chen Y, Wang Z, Peng Y, Zhang Z, Yu G and Sun J 2018 Cascaded pyramid network for multi-person pose estimation In *IEEE* 7103-7112