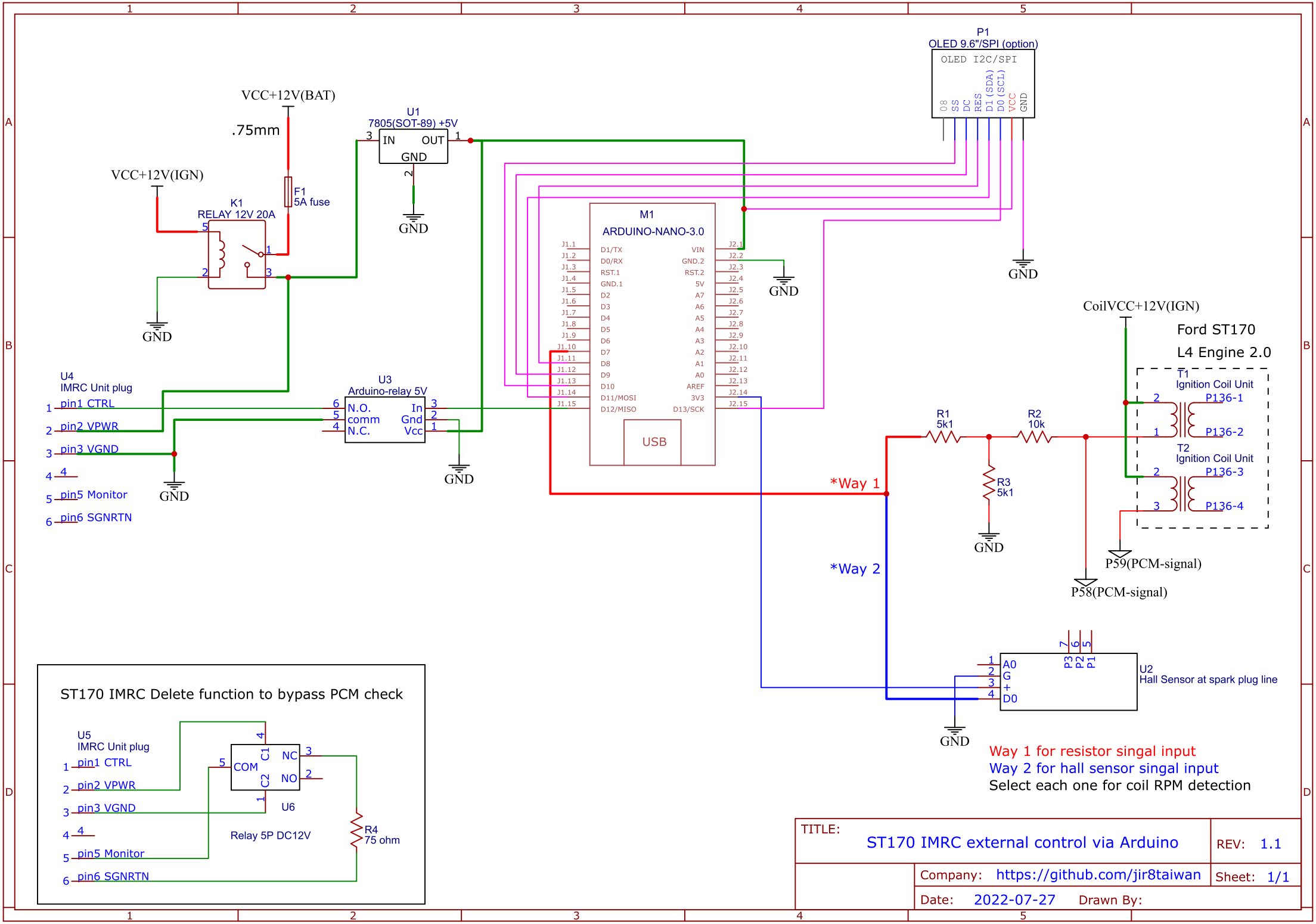
P1
OLED 9.6"/SPI (option)
OLED I2C/SPI
D8
SS
DC
RES
D1 (SDA)
D0 (SCL)
VCC
GND
VCC+12V(BAT)
.75mm
U1
7805(SOT-89) +5V
IN
OUT
GND
VCC+12V(IGN)
F1
5A fuse
K1
RELAY 12V 20A
GND
M1
ARDUINO-NANO-3.0
D1/TX
D0/RX
RST.1
GND.1
D2
D3
D4
D5
D6
D7
D8
D9
D10
D11/MOSI
D12/MISO
VIN
GND.2
RST.2
5V
A7
A6
A5
A4
A3
A2
A1
A0
AREF
3V3
D13/SCK
USB
U4
IMRC Unit plug
pin1 CTRL
pin2 VPWR
pin3 VGND
4
pin5 Monitor
pin6 SGNRTN
U3
Arduino-relay 5V
N.O.
comm
N.C.
In
Gnd
Vcc
CoilVCC+12V(IGN)
Ford ST170
L4 Engine 2.0
T1
Ignition Coil Unit
P136-1
P136-2
T2
Ignition Coil Unit
P136-3
P136-4
R1
5k1
R2
10k
R3
5k1
*Way 1
*Way 2
P59(PCM-signal)
P58(PCM-signal)
U2
Hall Sensor at spark plug line
A0
G
+
D0
P3
P2
P1
Way 1 for resistor singal input
Way 2 for hall sensor singal input
Select each one for coil RPM detection
ST170 IMRC Delete function to bypass PCM check
U5
IMRC Unit plug
pin1 CTRL
pin2 VPWR
pin3 VGND
4
pin5 Monitor
pin6 SGNRTN
COM
C1
C2
NC
NO
U6
Relay 5P DC12V
R4
75 ohm
TITLE:
ST170 IMRC external control via Arduino
REV: 1.1
Company: https://github.com/jir8taiwan
Sheet: 1/1
Date: 2022-07-27
Drawn By: