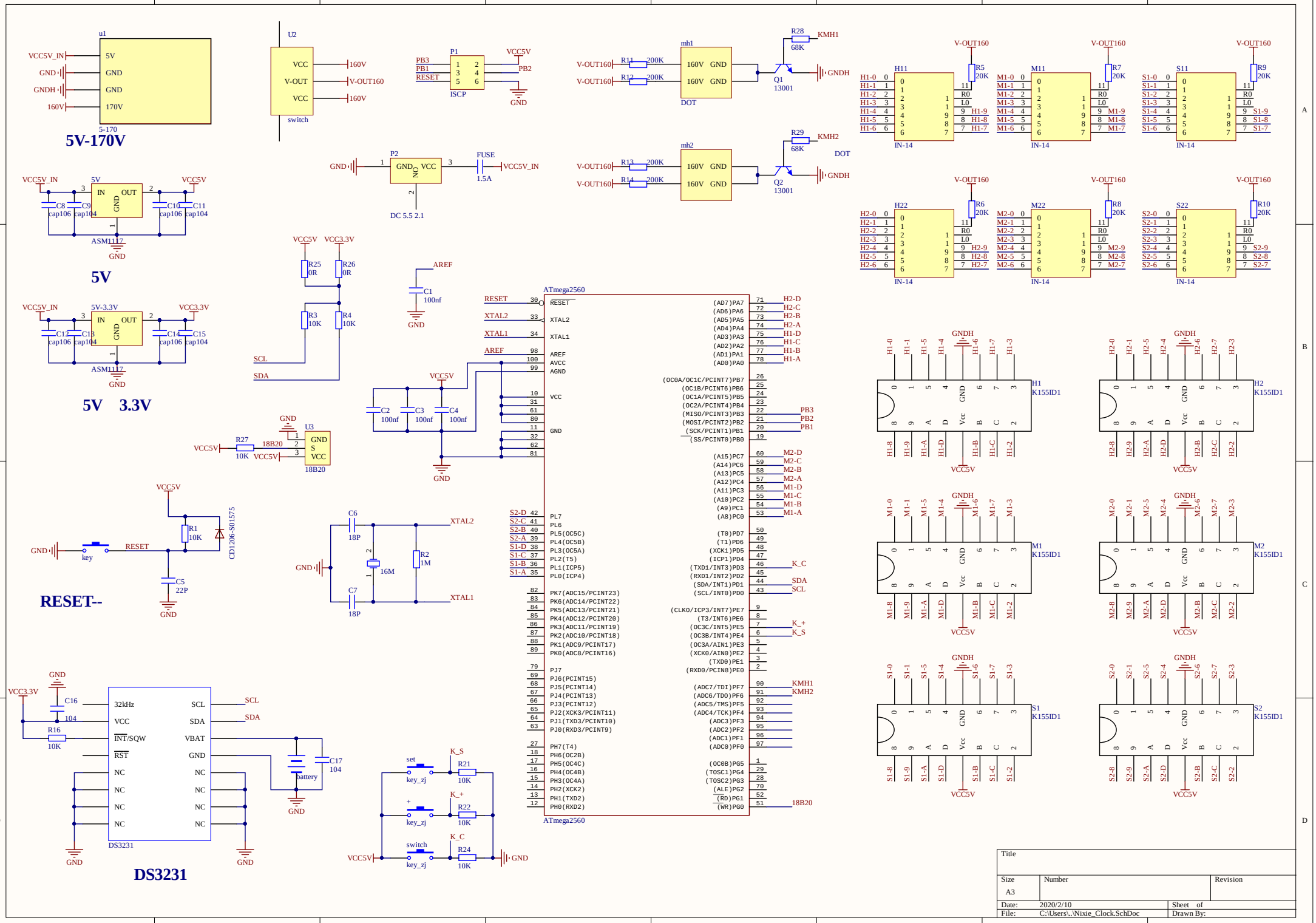
5V-170V
5V
5V 3.3V
RESET--
DS3231
ATmega2560
U2
switch
P1
ISCP
P2
DC 5.5 2.1
FUSE
1.5A
mh1
mh2
DOT
Q1
Q2
13001
H11
M11
S11
H22
M22
S22
IN-14
H1
H2
M1
M2
S1
S2
K155ID1
ASM1117
U3
18B20
CD1206-S01575
key
16M
battery
key_zj
set
switch
Title
Size
A3
Number
Revision
Date: 2020/2/10
Sheet of
File: C:\Users\..\Nixie_Clock.SchDoc
Drawn By: