23/02/2012

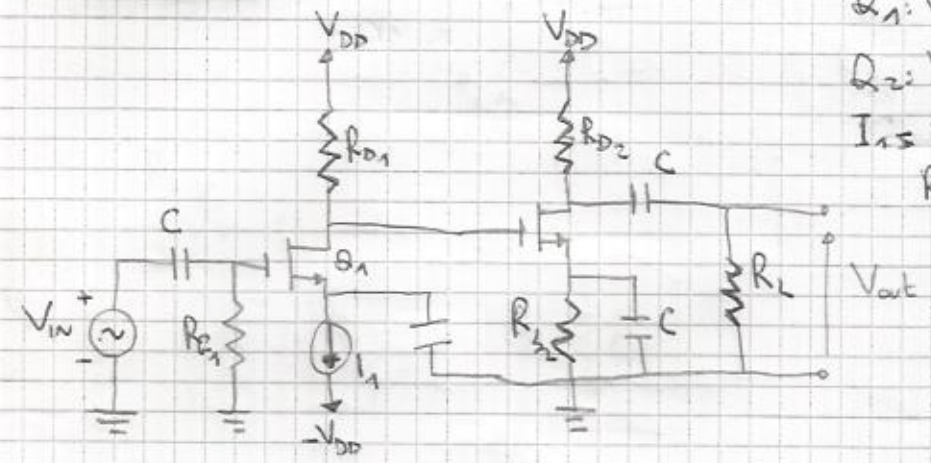

$Q_1: V_{T1} = 1V \quad K_1 = 0{,}5\,mA/V^2$

$Q_2: V_{T2} = 1V \quad K_2 = 1\,mA/V^2$

$I_1 = 2mA \quad V_{DD} = 5V \quad C = \infty$

$R_{G1} = 10K\Omega \quad R_{D1} = 1K\Omega \quad R_{S2} =$

$R_{D2} = 2K\Omega \quad R_L = 2K\Omega$

Calcolare V_{GS}, I_D e V_{DS} di Q_1 e Q_2 e $A_V = \frac{V_{out}}{V_{in}}$

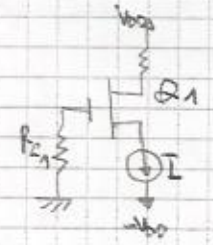

$$\begin{cases} V_{GS} = \overset{0}{V_G} - V_S \\ I_D = K(V_{GS} - V_T)^2 \end{cases} \Rightarrow \begin{cases} V_{GS} = -V_S \\ 2 = \frac{1}{2}(-V_S - 1)^2 \end{cases} \Rightarrow \begin{cases} \text{———} \\ 4 = V_S^2 + 1 + 2V_S \end{cases} \Rightarrow \begin{cases} \text{———} \\ V_S^2 + 2V_S - 3 = \end{cases}$$

$$V_{S1,2} = -1 \pm \sqrt{1+3} \begin{cases} V_{S1} = 1 & V_{GS} = -V_S > V_T \Rightarrow 1 > 1, \text{ NO} \\ V_{S2} = -3 & V_{GS} = -V_S > V_T \Rightarrow 3 > 1, \boxed{\text{ok, FUNZIONA}} \end{cases}$$

$\boxed{V_{GS_1} = 3V}$ $\boxed{I_{D_1} = I_1 = 2mA}$ $\boxed{V_{DS_1} = 6V}$ $\boxed{V_{S1} = -3V}$ $V_{D_1} = V_{DD} - I_1 R_D = \boxed{3}$

$V_{DS_1} = V_{D_1} - V_{S_1} =$

$= V_{DD} - I_D R_1 - V_{S1} = 6V$

$g_{m1} = 2K(V_{GS_1} - V_{T1}) = 1(3-1) = \boxed{2}$

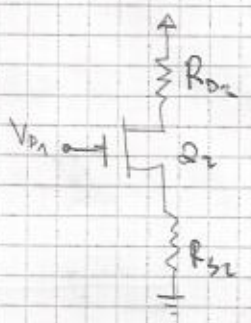

$$\begin{cases} V_{GS_2} = V_G - V_S \Rightarrow 3 - I_{D_2} R_{S2} \Rightarrow 3 - I_{D_2} \\ I_D = K(V_{GS} - V_T)^2 \end{cases} \quad \begin{cases} V_{GS_2} = 3 - I_{D_2} \\ I_D = (3 - I_D - 1)^2 \end{cases}$$

$I_D = (2 - I_D)^2 \Rightarrow 4 + I_D^2 - 4I_D = I_D$

$I_D^2 - 5I_D + 4 = \frac{5 \pm \sqrt{25-16}}{2} \begin{cases} 4 \\ 1 \text{ ok} \end{cases}$

$\boxed{V_{GS_2} = 2V}$

$\boxed{I_{D_2} = 1mA}$

$\boxed{V_{DS_2}} = V_{DD} - R_{D2} I_{D_2} - R_{S2} I_{D_2} = 5 - 2 \cdot 1 - 1 \cdot 1 = \boxed{2V}$

$g_{m2} = 2K \cdot (V_{GS_2} - V_{T2}) \Rightarrow 2 \cdot (2-1) = \boxed{2}$