ChatGPT Free offer ×

This is a copy of a shared ChatGPT conversation
Report conversation

list the ttl home made cpu

Below is a list of well-known **home-made CPUs built from TTL logic chips** (typically Texas Instruments 74xx Series and Nexperia 74HC/74LS devices). These projects are valuable references if you want to design your own educational CPU, especially for your interest in building simple RISC-V International and RISC-V processors.

Classic and Modern Home-Made TTL CPUs

1. Magic-1 Computer ↗

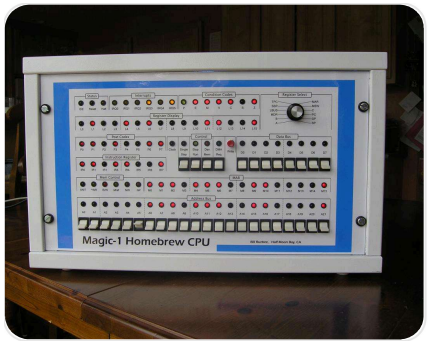

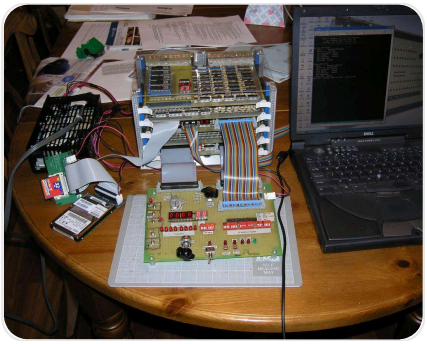

One of the most famous homebrew TTL computers, designed by Bill Buzbee.

- 16-bit architecture
- Built from hundreds of TTL chips
- Microcoded control unit
- Runs its own operating system
- Comparable in complexity to a commercial minicomputer

Why important: Demonstrates that a single individual can build a full computer from standard logic chips.

---

2. Gigatron TTL Microcomputer ↗

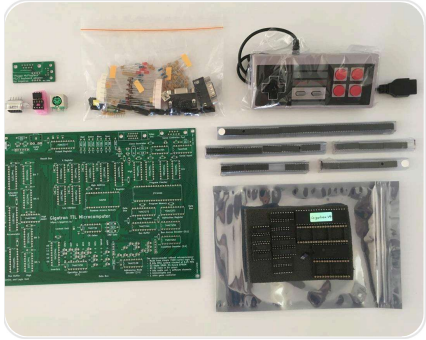
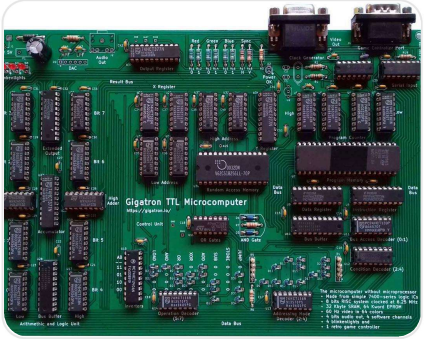

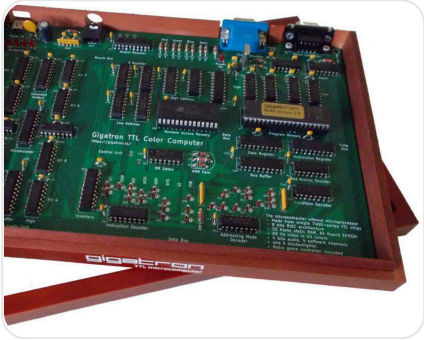

Created by Marcel van Kervinck and Walter Belgers.

- 8-bit TTL computer
- About 36 TTL chips
- No microprocessor
- Generates VGA video directly
- Interprets a virtual CPU architecture

Why important: Probably the most accessible modern TTL computer for beginners.

---

3. Ben Eater 8-Bit Breadboard Computer ↗

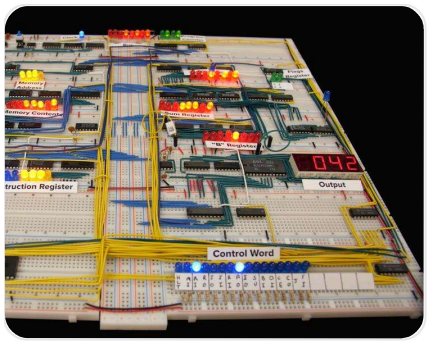

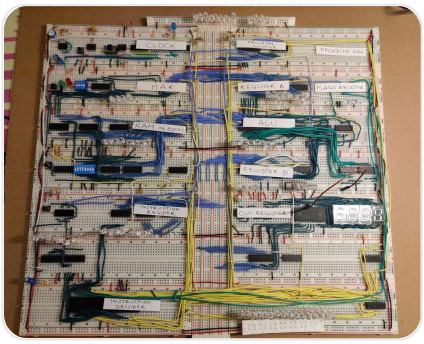
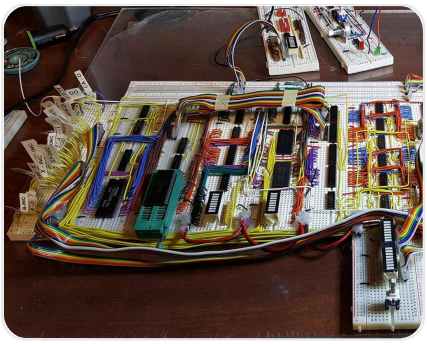

Designed by Ben Eater.

- 8-bit CPU
- Based on SAP-1 style architecture
- Built on breadboards
- Uses about 15–20 TTL chips
- Excellent educational videos and kits

Why important: The best starting point for learning CPU design from scratch.

---

4. NQSAP (Not Quite Simple As Possible) ↗

Designed by Tom Nisbet.

- Enhanced SAP architecture
- EEPROM-based microcode

- More capable than basic educational CPUs
- Good documentation

---

5. CSCvon8 ↗

Created by Warren Toomey.

- 8-bit microcoded CPU
- Runs a simple operating system and C compiler
- Highly educational

---

6. Monster 6502 ↗

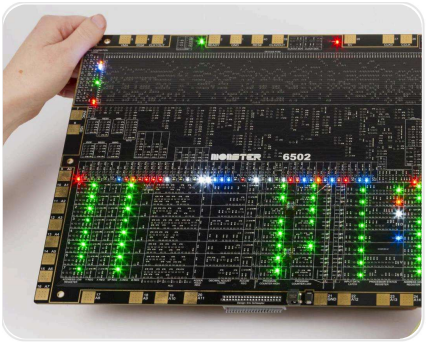

A giant transistor-level recreation of the MOS Technology 6502.

- Not TTL, but built from discrete transistors
- Functionally identical to the original 6502
- Demonstrates CPU implementation at the transistor level

---

7. Megaprocessor ↗

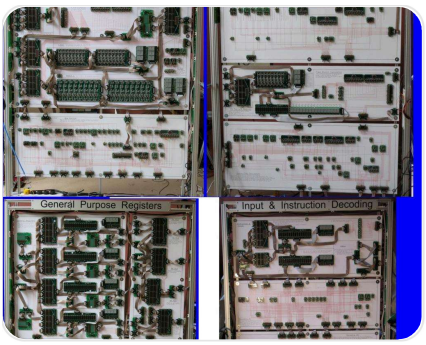

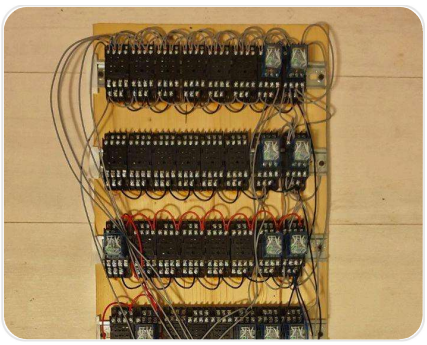

Created by James Newman.

- Built from relays rather than TTL
- Room-sized processor

- Educational and visually striking

---

8. PISCINO TTL CPU ↗

An educational TTL computer project with strong documentation and clear architecture.

---

9. MyNOR Computer ↗

Built entirely from NOR gates, illustrating universal logic design.

---

10. TUHS Homebrew CPU Collection ↗

A curated archive maintained by Warren Toomey containing many TTL CPU projects, simulators, and documentation.

Recommended Learning Path

1. Start with Ben Eater 8-Bit Breadboard Computer ↗.
2. Study NQSAP ↗.
3. Build or simulate Gigatron TTL Microcomputer ↗.
4. Explore CSCvon8 ↗.
5. Analyze Magic-1 Computer ↗.

Estimated TTL Chip Counts

Project	Architecture	Approx. Chip Count
Ben Eater 8-bit	8-bit	15–20
Gigatron	8-bit	~36
NQSAP	8-bit	30–60
CSCvon8	8-bit	40–80
Magic-1	16-bit	200+

Best Projects for Your Goals

Given your interest in educational CPU design and simple RISC-V implementations:

- **For absolute beginners:** Ben Eater 8-Bit Breadboard Computer ↗
- **For efficient TTL design:** Gigatron TTL Microcomputer ↗
- **For serious architecture study:** Magic-1 Computer ↗
- **For building a simple RISC-V-like CPU:** NQSAP ↗

If you'd like, I can also provide:

- A **chronological timeline** of home-made CPUs
- A **TTL chip count comparison chart**
- A **beginner-to-advanced study roadmap**
- Or a **minimal 8-bit RISC-V-inspired TTL CPU design** tailored for students.

what is sap

SAP stands for **Simple-As-Possible**, a family of educational computer designs introduced by Albert Paul Malvino in the book Digital Computer Electronics.

The purpose of SAP is to demonstrate the essential building blocks of a CPU using a very small number of registers and control signals. Many famous breadboard CPUs, including Ben Eater's 8-Bit Computer ↗, are based on the SAP concept.

Meaning of SAP

- **S** = Simple
- **A** = As
- **P** = Possible

The design strips a computer down to its core components so students can understand exactly how instructions are fetched, decoded, and executed.

SAP Family

SAP-1

The smallest practical educational CPU.

- 8-bit data bus
- 4-bit address bus (16 bytes of memory)
- Program Counter
- Memory Address Register
- Instruction Register
- Accumulator (A register)
- B register
- Arithmetic Logic Unit (adder/subtractor)
- Output register
- Control sequencer

Typical instructions include:

- LDA (Load Accumulator)
- ADD
- SUB
- OUT
- HLT

SAP-2

A more advanced version.

- Larger memory
- More registers
- Conditional branching
- Richer instruction set

SAP-3 (conceptual extensions)

Some educators use this label for custom enhanced versions, though it is less standardized.

How SAP Works

Every instruction is executed in a sequence of micro-operations:

1. **Fetch**
2. **Decode**
3. **Execute**

For example, the instruction `ADD 5` might:

1. Fetch the instruction from memory.
2. Load address 5 into the Memory Address Register.
3. Read memory at address 5.
4. Load the value into register B.
5. Add B to the Accumulator.

Basic Architecture

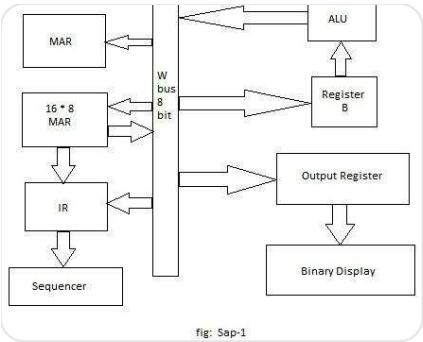

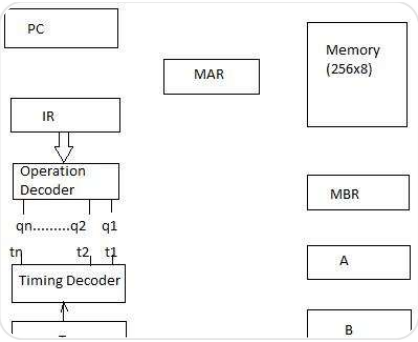

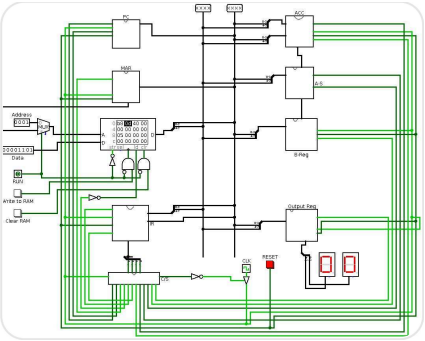

```
Program Counter → Memory → Instruction Register
                        ↓
                  Control Unit
                        ↓
Accumulator ↔ ALU ↔ B Register
                        ↓
                  Output Register
```

Why SAP Is Important

SAP is the "hello world" of CPU design.

It teaches:

- Registers
- Buses
- ALU operations
- Microcode and control signals
- Clocked digital logic
- Machine language

Understanding SAP makes it much easier to understand processors such as:

- MOS Technology 6502

- Intel 8080
- Intel 8086
- RISC-V

Relationship to RISC-V

SAP is not a RISC architecture, but the same fundamental ideas apply:

- Registers store values
- Instructions move and transform data
- The control unit orchestrates each step
- Memory holds both instructions and data

A minimal educational RISC-V CPU can be viewed as a modern extension of the SAP philosophy.

Popular SAP Implementations

- Ben Eater's 8-Bit Computer ↗
- NQSAP ↗
- Gigatron TTL Microcomputer ↗ (inspired by similar educational principles)

Example Program

assembly

```assembly
LDA 14
ADD 15
OUT
HLT
```

This program:

1. Loads a number from memory location 14.
2. Adds the number at memory location 15.
3. Sends the result to the output register.
4. Halts.

Summary

SAP (Simple-As-Possible) is a minimal educational CPU architecture designed to teach how computers work at the register-transfer level. It is one of the best foundations for learning digital design, TTL computers, and modern processor architectures such as RISC-V.