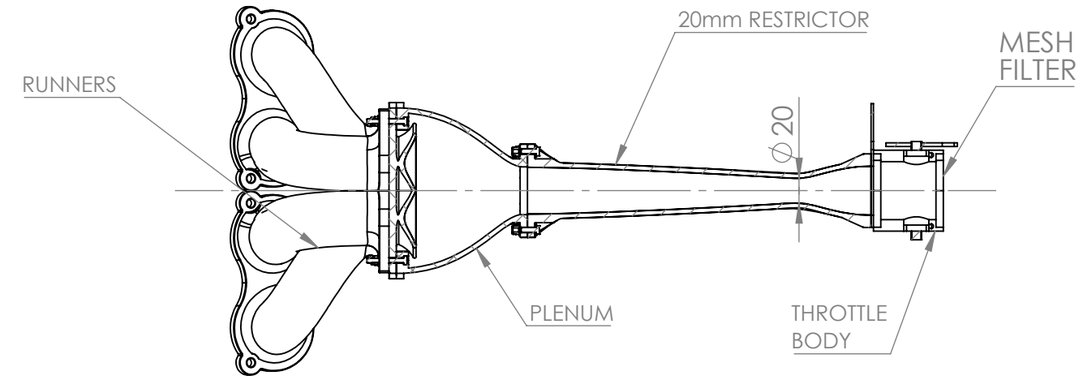

CUT VIEW OF INTAKE SYSTEM
A: SCALE 1:5

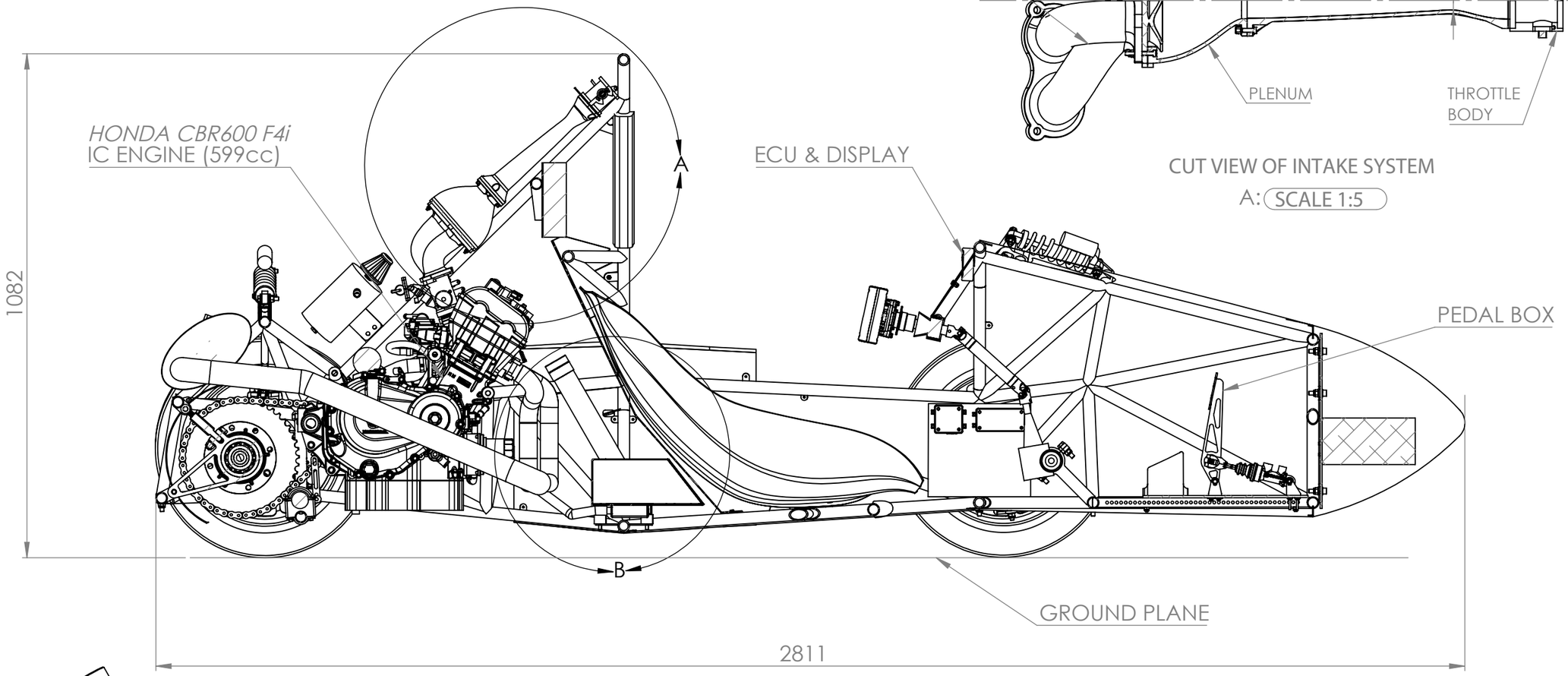

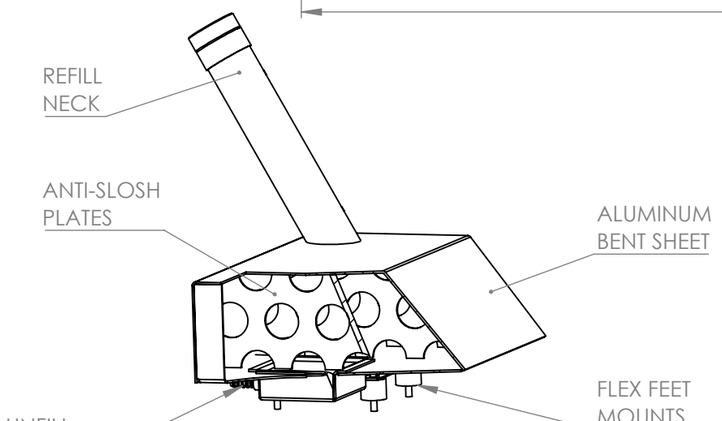

FUEL TANK
B: SCALE 1:6

NOTES: [for sake of simplification]
Some components are represented with a *cut down* CAD geometry.
Detailed views do not follow drawing norms.

	SCALE 1:10	DATE	*22/05/2024*	NOVA FORMULA STUDENT	
MATERIAL	Various	DRAWN	J. Balbino	*Universidade NOVA de Lisboa*	ASSEMBLY
WEIGHT (Kg)	247	CHECKED	J. Rodrigues		SIDE VIEW
QUANTITY	1	APROVED	M. Pereira		
TOLERANCES	ISO 2768			A3	
DIMENSIONS ARE IN MM					

FSA	FSPT	PROJECT	SHEET
#7	*#207*	*FS FENIX EVO*	2 / 3