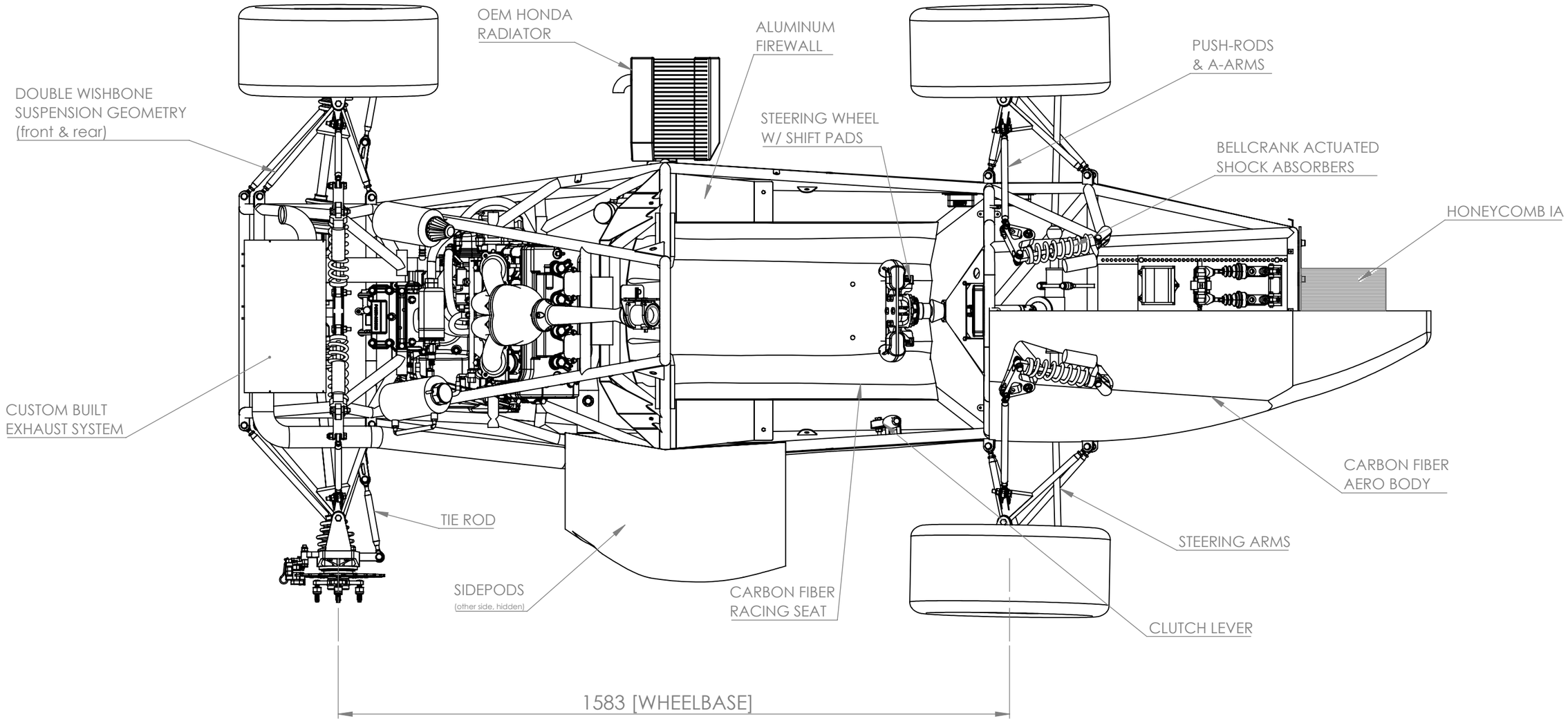

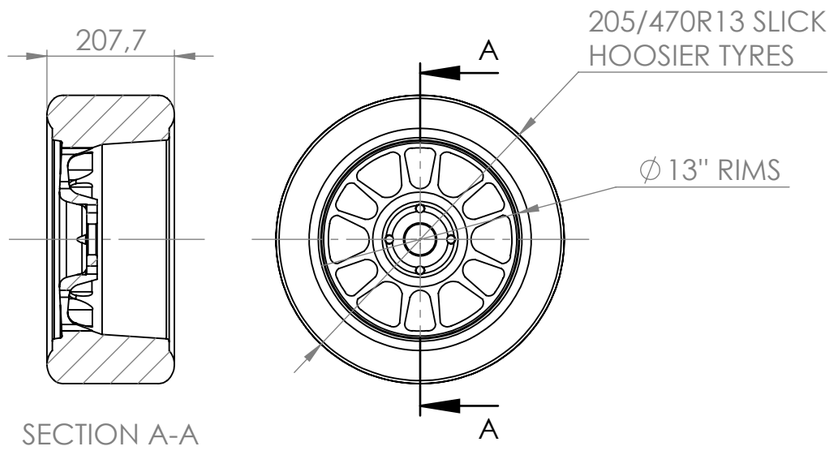

NOTES: [for sake of simplification]
Some components are represented with a *cut down* CAD geometry.
Detailed views do not follow drawing norms.
Thanks for reading everything, here's a pink dolphin:

	SCALE 1:10	DATE	*22/05/2024*	NOVA FORMULA STUDENT	
MATERIAL	Various	DRAWN	J. Balbino	ASSEMBLY	
WEIGHT (Kg)	247	CHECKED	J. Rodrigues	*Universidade NOVA de Lisboa*	TOP VIEW
QUANTITY	1	APROVED	M. Pereira		
TOLERANCES	ISO 2768			A3	FSA: *#7* / FSPT: *#207* / PROJECT: *FS FENIX EVO* / SHEET: 3 / 3
DIMENSIONS ARE IN MM					