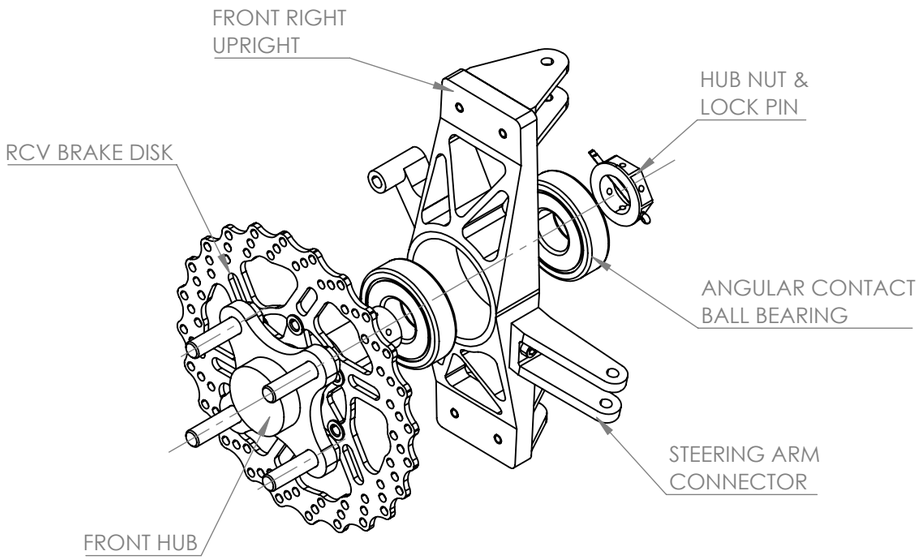

WHEEL HUB ASSEMBLY
A: SCALE 1:4

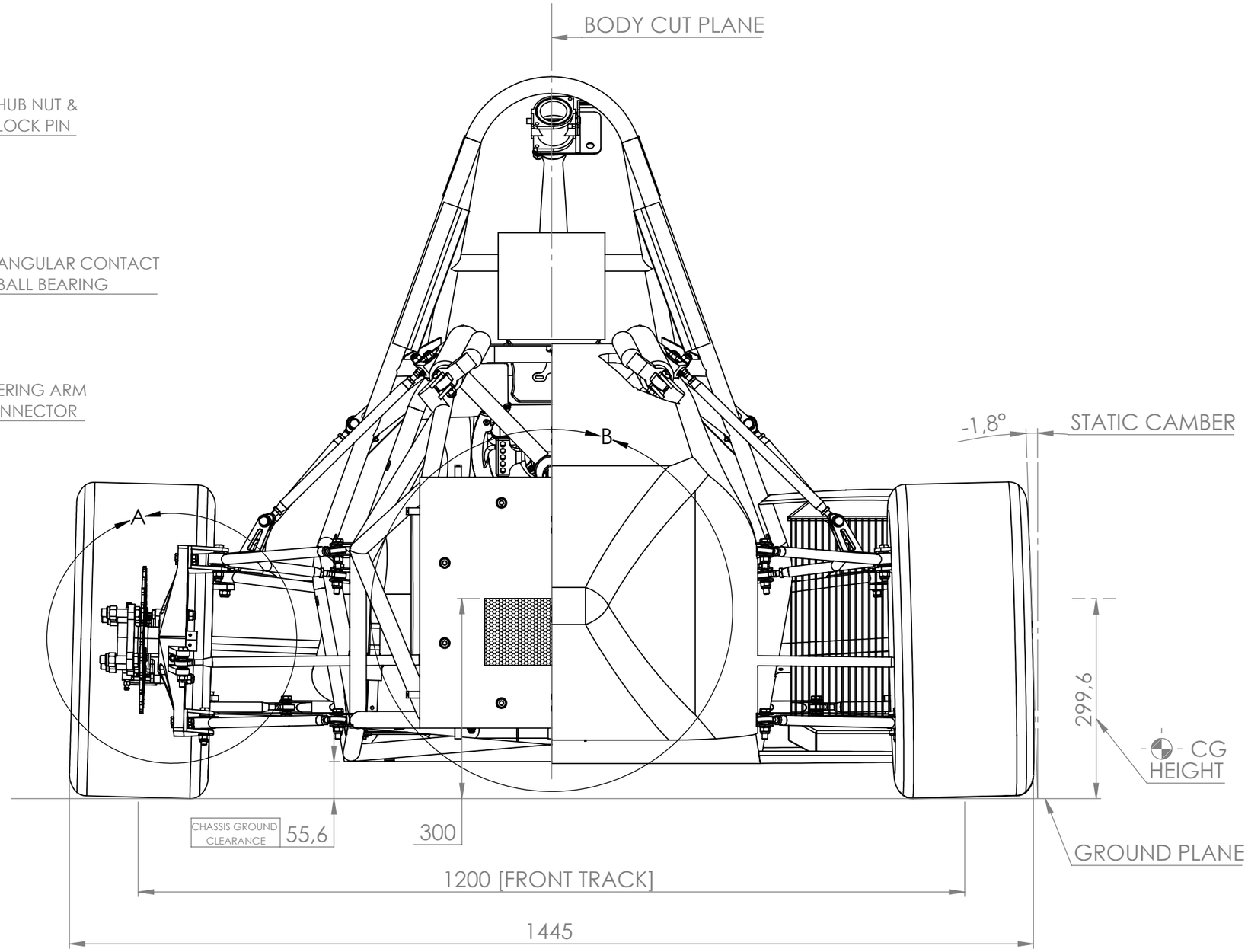

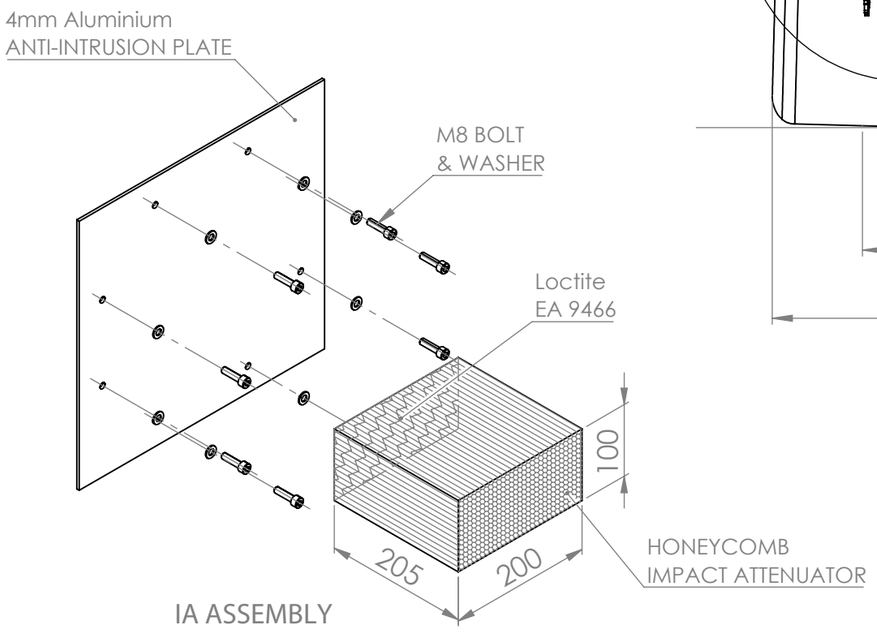

IA ASSEMBLY
B: SCALE 1:7

NOTES: [for sake of simplification]
Some components are represented with a *cut down* CAD geometry.
Detailed views do not follow drawing norms.

SCALE 1:7		DATE	*22/05/2024*	NOVA FORMULA STUDENT	
MATERIAL	Various	DRAWN	J. Balbino	ASSEMBLY	
WEIGHT (Kg)	247	CHECKED	J. Rodrigues	FRONT VIEW	
QUANTITY	1	APROVED	M. Pereira	*Universidade NOVA de Lisboa*	
TOLERANCES	ISO 2768	A3	FSA	FSPT	PROJECT	SHEET
DIMENSIONS ARE IN MM			*#7*	*#207*	*FS FENIX EVO*	1 / 3