ResearchGate

See discussions, stats, and author profiles for this publication at: https://www.researchgate.net/publication/3451712

CNTFET Modeling and Reconfigurable Logic-Circuit Design

Article *in* IEEE Transactions on Circuits and Systems I Regular Papers · December 2007

DOI: 10.1109/TCSI.2007.907835 · Source: IEEE Xplore

CITATIONS
179

READS
3,248

12 authors, including:

Ian O'Connor
École Centrale de Lyon
304 PUBLICATIONS **2,989** CITATIONS

SEE PROFILE

Frederic Gaffiot
École Centrale de Lyon
74 PUBLICATIONS **1,002** CITATIONS

SEE PROFILE

Fabien Prégaldiny
University of Strasbourg
41 PUBLICATIONS **1,211** CITATIONS

SEE PROFILE

C. Lallement
68 PUBLICATIONS **1,422** CITATIONS

SEE PROFILE

All content following this page was uploaded by C. Maneux on 06 November 2014.

The user has requested enhancement of the downloaded file.

CNTFET Modeling and Reconfigurable Logic-Circuit Design

Ian O'Connor, *Member, IEEE*, Junchen Liu, Frédéric Gaffiot, Fabien Prégaldiny, Christophe Lallement, *Member, IEEE*, Cristell Maneux, Johnny Goguet, Sebastien Frégonèse, Thomas Zimmer, Lorena Anghel, *Member, IEEE*, Trong-Trinh Dang, and Régis Leveugle, *Member, IEEE*

***Abstract*—This paper examines aspects of design technology required to explore advanced logic-circuit design using carbon nanotube field-effect transistor (CNTFET) devices. An overview of current types of CNTFETs is given and highlights the salient characteristics of each. Compact modeling issues are addressed and new models are proposed implementing: 1) a physics-based calculation of energy conduction sub-band minima to allow a realistic analysis of the impact of CNT helicity and radius on the dc characteristics; 2) descriptions of ambipolar behavior in Schottky-barrier CNTFETs and ambivalence in double-gate CNTFETs (DG-CNTFETs). Using the available models, the influence of the parameters on the device characteristics were simulated and analyzed. The exploitation of properties specific to CNTFETs to build functions inaccessible to MOSFETs is also described, particularly with respect to the use of DG-CNTFETs in fine-grain reconfigurable logic.**

***Index Terms*—Circuit simulation, carbon nanotube field-effect transistor (CNTFET), compact model, reconfigurable logic gates.**

I. Introduction

THE PURSUIT of Moore's Law, as predicted by the International Technology Roadmap for Semiconductors (ITRS) has pointed to significant future intrinsic device hurdles (such as leakage, interconnect, power, quantum effects) to the capability of realizing system architectures using CMOS transistors with the performance levels required by future applications. It is recognized that these limitations, as much fundamental as economic, require the semiconductor industry to explore the use of novel materials and devices able to complement or even replace the CMOS transistor in systems on chip within the next decade and before silicon based technology will reach its limits in 2020 when the channel length of MOSFET is below 10 nm.

Several such nanodevices are currently being researched, such as the carbon nanotube field-effect transistor (CNTFET), the resonant tunneling diode (RTD), the single-electron transistor (SET), and the spin FET (SPINFET). In general, nanoscience research focuses primarily on the search for new physical concepts and on creating the technology necessary for the development of nanodevices. However, it is also necessary to pursue industrial and academic research into new computing or memory circuit structures based on nanodevices and quantify their respective performance with respect to CMOS or silicon-on-insulator (SOI)-based circuits (in terms of integration density, speed, power and reliability).

The association of these devices to realize basic circuits requires a diverse skill set: basic understanding of the physical behavior of nanodevices to identify exploitable properties for novel circuit design; accurate compact modeling of nanodevices for electrical simulation; "quasi-analog" design, sizing and optimization of elementary functions; extraction of meaningful performance data for comparison with respect to future technologies predicted by the ITRS; dialog with nanotechnology research groups for fabrication and test of circuits, incorporation of technology data and constraints into device simulation and circuit design.

CNTFETs are among the most promising nanodevices from the standpoint of their integration into future nanoelectronic systems on chip. Their physical characteristics (achievable current density, theoretical transition frequency and $I_{\mathrm{on}}/I_{\mathrm{off}}$ ratio), as well as their versatility and maturity all argue in favor of this view. They have diameters of typically 1 to 3 nm, but can be several micrometers long. CNTs can be exploited to build both low-resistance high-strength interconnections and highly scalable low-power CNTFETs and single-electron tunneling transistors [1]. It is possible to consider that CNTFETs can be used to construct logic circuits under two scenarios.

- The CNTFET replaces the MOSFET, transposing existing logic functions directly to a new technology. In this scenario it must be proved that a significant performance gain can be achieved justifying a shift in fabrication technologies to CNTFET-based logic circuits. For this, it is necessary to develop compact CNTFET models which are not only adequate for the logic designer, but also allow the evaluation of the robustness of the new circuits with respect to expected faults, defaults and parameter variations. These compact models must include both the new physical characteristics (ballistic and quantum transport) and the accurate modeling of the impact of the device parameters (in particular, nanotube diameter and contact resistance).
- Specific properties of the CNTFET can be used, allowing the creation of completely new logic functions, inaccessible to MOSFET-based circuits. In this scenario, while

Manuscript received October 1, 2006; revised May 16, 2007. This work was supported in part by the French Ministry of Research under the Nanosys program (ACI Nanosciences). This paper was recommended by Guest Editor C. Lau.

I. O'Connor, J. Liu, and F. Gaffiot are with École Centrale de Lyon, F-69134 Ecully, France (e-mail: ian.oconnor@ec-lyon.fr).

F. Prégaldiny and C. Lallement are with Institut d'Électronique du Solide et des Systèmes (InESS), F-67412 Illkirch Cedex, France (e-mail: fabien.pregaldiny@iness.c-strasbourg.fr).

C. Maneux, J. Goguet, S. Frégonèse, and T. Zimmer are with IMS Laboratory, University Bordeaux 1, F-33405 Talence, France (e-mail: maneux@ixl.fr).

L. Anghel, T.-T. Dang ,and R. Leveugle are with Techniques of Informatics and Microelectronics for Computer Architectures (TIMA) Laboratory, F-38031 Grenoble Cedex, France (e-mail: Regis.Leveugle@imag.fr).

Digital Object Identifier 10.1109/TCSI.2007.907835

1549-8328/$25.00 © 2007 IEEE

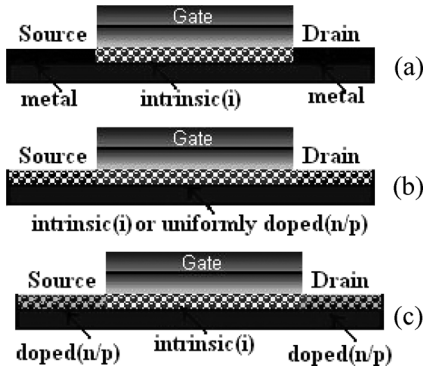

Fig. 1. Three possible types of CNTFETs. (a) SB. (b) PG. (c) Doped-S/D transistors.

the application remains the same (data processing), the elementary building blocks and the way the data is coded are open to question to achieve increased efficiency at application level. For this, the compact CNTFET models must, in addition to the properties previously described, accurately model specific CNTFET characteristics (such as ambipolarity).

This work focuses on several aspects of design using CNTFETs and evaluation of their potential in a circuit and systems context. Firstly in Section II, a panorama of existing CNT-based devices is presented, showing the capabilities of the technology. Circuits based on such devices require available device models, compatible with up-to-date design flows, and the necessary step from physical to compact modeling of the device and its variants is described in Section III. Section IV details the analysis of the device behavior as a transistor and, through simulation with the compact models, explores the strengths and weaknesses of the device as compared to advanced MOSFET devices. Finally, Section V describes the use of a specific property in double-gate CNTFETs (DG-CNTFETs) to build logic cells that offer fine-grain reconfigurability not available with MOSFET technology, at comparable or better speed and power figures.

II. Types of CNTFETs

This section summarizes several types of CNTFETs fabricated so far. There are three possible CNTFET structures: Schottky-barrier CNTFET (SB-CNTFET) [Fig. 1(a)], partially gated (PG) CNTFET [Fig. 1(b)], and doped-S/D CNTFET [Fig. 1(c)] [2].

Early CNTFETs are typically p-type devices: the current carriers are holes and the devices are considered ON for negative gate bias. n-type CNTFETs can be obtained by direct doping of the tube with an electropositive element or by a simple annealing process of p-type CNTFETs. The structure of these CNTFETs is shown in Fig. 1(a). It requires careful alignment of the SB and the gate electrode, which may represent a manufacturing challenge. In this type, the gate modulates the tunneling transmission through a SB between the source metal and the nanotube channel. SB-CNTFETs exhibit strong ambipolar characteristics, which limit the use of these transistors in conventional CMOS-like logic families [3] since these SB-CNTFETs convert their functionality from n-type to p-type and vice versa depending on the gate bias. More importantly, the $I_{\mathrm{ON}}/I_{\mathrm{OFF}}$ ratio is rather small. But the ambipolar characteristic can also be explored to build new logic architectures that are different from conventional CMOS logic.

PG-CNTFETs are presented in Fig. 1(b). They are uniformly doped (or uniformly intrinsic) with ohmic contacts at their ends. PG-CNTFETs can be of n-type or p-type when, respectively, n doped or p doped. These devices work in depletion mode (uniformly n/p doped): the gate locally depletes the carriers in the nanotube and turns OFF the p-type device with an effectively positive threshold voltage (effectively negative for n type) that approaches the theoretical limit for room-temperature operation. The ON current of such devices is limited by a "source exhaustion" phenomenon $I_D(\mathrm{on}) = q * Q_L * v_T$ where Q_L is the carrier density per unit length and v_T is the unidirectional thermal velocity [2]. When the CNT is intrinsic, CNTFETs operate in enhancement mode and exhibit n- or p-type unipolar behavior and are electrostatically tunable [4].

Doped-S/D CNTFETs presented in Fig. 1(c) are composed of two un-gated portions that are heavily or lightly n/p doped. The ON current is limited by the amount of charge that can be induced in the channel by the gate and not by the doping in the source. They operate in a pure p- or n-type enhancement mode [4] or in a depletion mode [5], based on the principle of barrier height modulation when applying a gate potential. These CNTFETs are promising: 1) they only show unipolar characteristics, unlike SB-CNTFETs; 2) the absence of SB reduces the OFF leakage current; 3) they are more scalable compared to their SB counterparts; 4) in the ON-state, the source-to-channel junction has a significantly higher ON current. However, controlled doping is very difficult and ion implantation techniques must be avoided because the ions may replace carbon atoms and destroy the desired nanotube properties. Depending on the doping profile along the nanotube, there are two different CNTFET designs [4]. Firstly, CNTFETs with p/i/p or n/i/n doping schemes are similar to conventional p or n MOSFETs in principle, so-called C-CNTFETs. But when these devices are aggressively scaled, they suffer from a "charge pile up" phenomenon in the channel which substantially deteriorates the OFF-state performance and limits the $I_{\mathrm{ON}}/I_{\mathrm{OFF}}$ ratio. Secondly, CNTFETs with an n/i/p doping scheme (also called tunneling (T) CNTFETs), operate based on band-to-band tunneling, and the tunneling current is controlled by the positions of the valence and conduction bands. This tunnel device eliminates the charge pile-up effect mentioned above. Further, this device has the advantage of good switching speed and acceptable power consumption [6].

Table I shows a brief comparison between the three types of CNTFETs discussed above, where all data for the CNTFETs have been measured on single nanotube devices and are normalized to device width.

Besides the planar structures presented above, some authors [7] have proposed a concept of vertical (V) CNTFET consisting of a single-wall CNT (SWCNT) with a coaxial gate. From their comparison between a V-CNTFET and a year-2016 MOSFET, this V-CNTFET enables 3-D circuits and fulfills requirements predicted by the 2003 ITRS roadmap. In order to compare a V-CNTFET with the corresponding silicon MOSFET, the authors assumed the parallel operation of 250 nanotubes per micron. Table II is a summary of the comparison. All data for

TABLE I
COMPARISON OF THREE TYPES OF CNTFET

Property	SB-CNTFET [3]	PG-CNTFET [4]	C-CNTFET [5]
Diameter (d)	~1.4nm	~1.4nm	~1.6nm
Gate position	top	local	top
t_{ox} (nm)	15	4	8
Dielectric	ZnO_2	Al_2O_3	HfO_2
S/D metal	Ti	Ti	Pd
CNT length	260nm	600nm	80nm
$\|V_{DS}\|$ (V)	0.5	0.5	0.5
I_{ON}(μA/μm)	535	71	2500
Ion/Ioff	10^4	10^4	10^6
S (mV/dec)	n-type:312 p-type:130	p-type:63	n-type:80 p-type:70
g_m(S/μm)	p-type:1160	-	n-type:6250 p-type:3125
Vth(V)	n-type:0.3 p-type:-0.5	p-type:-0.5	n-type:~-0.6 p-type:~0.5

TABLE II
COMPARISON OF V-CNTFET AND ULTIMATE MOSFET [7]

Characteristic	V-CNTFET	MOSFET (2016)
Vdd (V)	0.4	0.4
Drive current (μA/μm)	2500	1500
g_m (μS/μm)	15000	1000
t (Cgate*Vdd/Idd) (ps)	0.08	0.15
S (mV/dec)	65	70
Leakage (μA/μm)	2.5	10
Effective tox (nm)	1	0.4–0.5

the CNTFETs have been measured on single nanotube devices and are normalized to device width for comparison. It can be seen that all CNTFET values outperform the best value for Si MOSFET devices. A V-CNTFET is expected to deliver a drive current about two times higher than that of the MOSFET at 0.4 V and to achieve transconductance values fifteen times higher. Furthermore, current CNTFETs are still much longer than actual MOSFET channels but are shown to be better than MOSFETs with respect to ON-resistance, a key issue for *RC* delay. One interesting question about CNTFETs is whether short tube devices will also surpass silicon devices in the frequency domain.

III. CNTFET COMPACT MODELING

A. Carbon Nanotube in a Transistor Configuration

The structure of the conventional CNTFET (C-CNTFET) provides a MOSFET-like behavior similar to that of a MOSFET but with ballistic transport [3]. The source and drain regions are heavily doped, which provides barrier-height modulation by application of the gate potential [Fig. 2(a) and (b)].

Since, for source–drain distances shorter than 150 nm, carrier transport is essentially ballistic at both high and low voltages, the description of current flow through the CNT relies on: i) the features of ballistic transport; ii) the specific electron confinement along the nanotube [8].

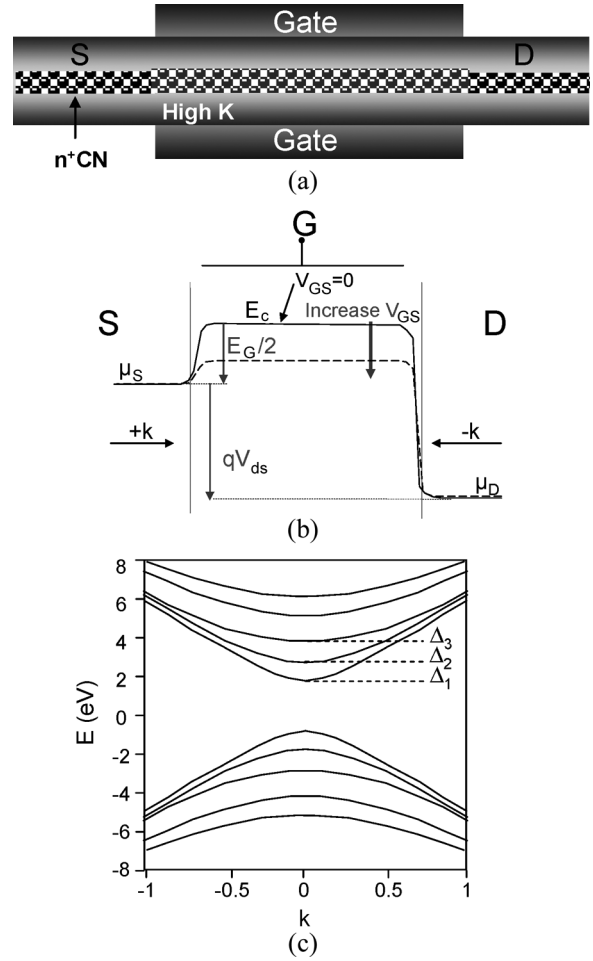

Fig. 2. C-CNTFET. (a) Schematic device features with a high-K dielectric. (b) Band diagram with, at $V_G = 0$ V, the barrier height at the source–channel junction equal to $E_G/2$. The source and drain Fermi levels are shown by μ_S and μ_D. (c) Energy versus wave number ($E - k$) diagram.

- Since the current remains constant throughout the channel, the current is calculated at the top of the energy barrier corresponding to the beginning of the channel.
- At the top of the barrier, electrons coming from the source fill up the $+k$ states and the electrons coming from the drain fill up the $-k$ states [Fig. 2(b)].
- Depending on the single-wall nanotube (SWNT) helicity and radius, the periodic boundary conditions impose restrictions on available states [9], which results in a discrete set of energy sub-band structures [Fig. 2(c)].

B. Model Description for the MOSFET-Like CNTFET

As the gate bias voltage $V_{\rm GS}$ modulates the top of the energy barrier, it lowers the channel potential by an amount $V_{\rm CNT}$ and causes accumulation of charge in the channel $Q_{\rm CNT}$. This charge $Q_{\rm CNT}$ induces a voltage drop $V_{\rm GS} - V_{\rm CNT}$ across the high-K insulator which causes the energy bands to be lowered by $V_{\rm CNT}$. This self-consistent loop in CNTFET operation cannot be handled in a circuit-compatible model. Hence, the compact model proposed by Raychowdhury *et al.* [10] is based

on the calculation of the control potential V_{CNT} through fitting parameters of the channel charge Q_{CNT}

$$V_{\mathrm{CNT}} = V_{\mathrm{GS}} - \frac{Q_{\mathrm{CNT}}}{C_{OX}} \tag{1}$$

where C_{OX} is the gate-oxide capacitance, and Q_{CNT} depends on the number of carriers in the channel, n_{CNT}, which is the sum of the energy sub-band contributions [11].

The drain–current equation is derived from the Landauer formula [9] which describes ballistic transport with ideal contacts. Its expression represents the sum of the energy sub-band contributions of two terms (signifying the occupation of the $+k$ states from the source up to μ_S and the occupation of the $-k$ states from the drain up to μ_D)

$$I_D = \frac{4ek_BT}{h}\sum_{p=1}^{+\infty}\left[\ln\left(1+\exp\frac{-\Delta_P + V_{\mathrm{CNT}}}{k_BT}\right) - \ln\left(1+\exp\frac{-V_{\mathrm{DS}} - \Delta_P + V_{\mathrm{CNT}}}{k_BT}\right)\right] \tag{2}$$

where Δp is the minima of the pth energy sub-band, e is the electron charge, k_B the Boltzmann constant, h the Planck constant, and T the temperature.

Since it is not possible to obtain an analytical closed-form expression to calculate the number of carriers in the channel, n_{CNT}, the following empirical relationship has been proposed in [10]:

$$\begin{aligned} V_{\mathrm{CNT}} &= V_{\mathrm{GS}} \quad \text{for} \quad V_{\mathrm{GS}} < \Delta_1 \\ &= V_{\mathrm{GS}} - \alpha(V_{\mathrm{GS}} - \Delta_1) \quad \text{for} \quad V_{\mathrm{GS}} \geq \Delta_1 \end{aligned} \tag{3}$$

where Δ_1 is the energy level for the first sub-band, and $\alpha = \alpha_0 + \alpha_1 V_{\mathrm{DS}} + \alpha_2 V_{\mathrm{DS}}^2$. $\alpha_{0,1,2}$ are fitting parameters depending on the gate-oxide capacitance, CNT radius, and helicity.

C. Sub-Bands Minima Calculation

The CNT structure can be seen as the result of the rolling up of a graphene sheet [9] with the unit cell defined by a lattice vector $\vec{C}$ and a primitive translation $\vec{T}$. The rolling up is geometrically characterized by the indices n and m which specify the CNT radius and helicity

$$\vec{C} = n\vec{a}_1 + m\vec{a}_2. \tag{4}$$

The 2D-Brillouin zone of the nanotube unit cell is a rectangle in the reciprocal space and the values of the electron wave-vector, $\vec{\mathrm{K}}$ are restricted by the rotational boundary condition

$$\vec{\mathrm{K}}\vec{C} = 2\pi q \tag{5}$$

with $q = 0, 1, \ldots, N-1$ and N the unit cell number of atom pairs

$$N = \frac{2*(n^2+m^2+nm)}{d_R} \tag{6}$$

with $d_R = \gcd(2m+n, 2n+m)$.

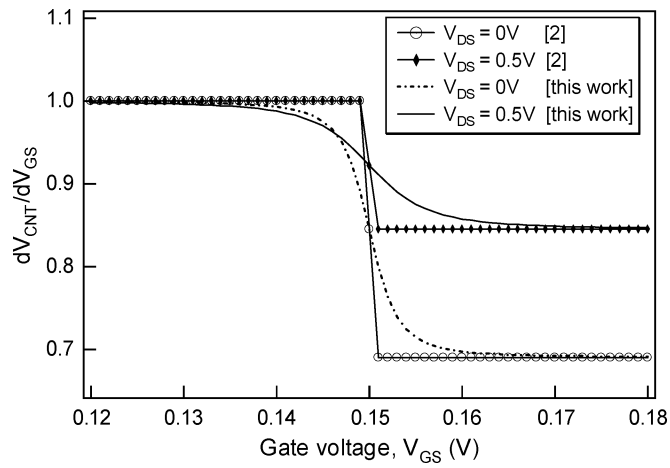

Fig. 3. Derivative of the control potential V_{CNT} w.r.t. the gate voltage V_{GS} for different drain-to-source voltages.

The band structure of the rolled-up nanotube can be obtained by zone-folding the band structure of the graphene sheet [12], [13]. An analytical approximation describing the minima energy of the CNT sub-bands is given by

$$E(k_1,k_2) = V_{\mathrm{pp}\Pi}\sqrt{1+2\cos(2\pi k_1)+2\cos(2\pi k_2)+2\cos(2\pi(k_1-k_2))} \tag{7}$$

where k_1 and k_2 depend on the n and m parameters

$$k_1 = \frac{q}{N}\left(\frac{2n+m}{d_R}\right), \quad k_2 = \frac{q}{N}\left(\frac{2m+n}{d_R}\right). \tag{8}$$

Hence, the values of $E(k_1, k_2)$ are successively calculated using (7). Then, the lowest values are ordered to select the minima of the first, second,. . ., pth energy sub-bands, i.e. $\Delta_{1,2,\ldots,p}$.

D. Convergence Issues

Although (3) is correct to describe the relationship between the gate voltage and the surface potential, it is not convenient for compact modeling purposes due to convergence issues (discontinuities, cf. Fig. 3). Therefore, major improvements solving the convergence problems of the original model [10] are necessary. We propose a new relationship for (3), which demonstrates excellent derivative behavior

$$V_{\mathrm{CNT}} = V_{\mathrm{GS}} - \frac{\alpha\cdot(V_{\mathrm{GS}}-\Delta_1) + \sqrt{[\alpha\cdot(V_{\mathrm{GS}}-\Delta_1)]^2 + 4\cdot\varepsilon^2}}{2} \tag{9}$$

where $\varepsilon = 5\cdot 10^{-2}$ is a smoothing constant.

With the knowledge of both charge and surface potential as functions of gate bias, the gate input capacitance $C_G(= dQ_{\mathrm{CNT}}/dV_{\mathrm{GS}})$ can be computed in terms of the device parameters and terminal voltages. The total charge can be split up into Q_S and Q_D and, hence, the total gate capacitance can also be split up into C_{GS} and C_{GD} (Fig. 4).

To elaborate an efficient expression of C_G for a compact model, it is important to first have an analytical closed-form expression of $Q_{\mathrm{CNT}}(V_{\mathrm{CNT}})$ as well as continuous derivatives. As it is not possible to obtain a closed-form relationship for the

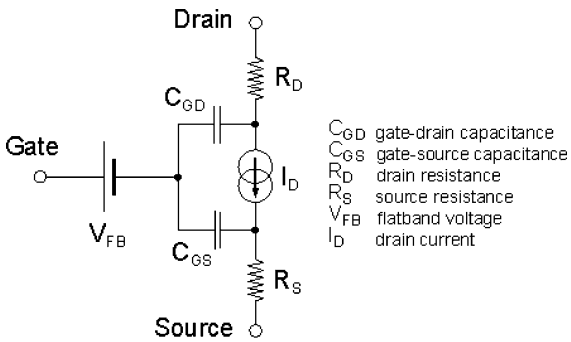

Fig. 4. Electrical simulation compatible circuit model for CNTFET.

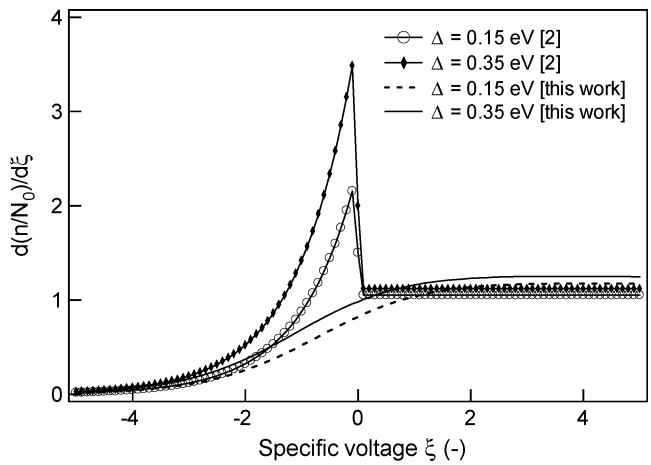

Fig. 5. Derivative of the normalized carrier density (n/N_0) w.r.t. the specific voltage ξ, for various values of energy level Δ.

quantum-charge in the channel, an empirical solution has been proposed in [10]

$$n = \begin{cases} N_0 \cdot A \cdot \exp \xi, & \text{for } \xi < 0 \\ N_0 \cdot (B \cdot \xi + A), & \text{for } \xi \geq 0 \end{cases} \tag{10}$$

where the parameters A and B are dependent on the energy level Δ and ξ is the specific voltage equal to

$$\xi_{\mathrm{S/D}} = \frac{V_{\mathrm{CNT}} - \Delta_p - \mu_{\mathrm{S/D}}}{k_B \cdot T}.$$

Equation (10) is unfortunately not appropriate for circuit simulation because its derivatives are not continuous, as shown in Fig. 5. Accordingly, the various capacitances determined by (10) would not be correct to elaborate the CNTFET dynamic model. In addition, this would lead to numerical problems during simulations. In order to solve the numerical problems, a new equation, similar to the interpolation function of the EKV MOSFET model [14], has been derived to describe the carrier density n. This new expression and its derivatives are continuous and well-suited for circuit simulation, especially in dynamic operation

$$n_{\mathrm{eff}}(\xi) = 1.2 \cdot B \cdot \ln\left[1 + \frac{A}{1.2 \cdot B} \cdot \exp\left(\frac{\xi}{\eta}\right)\right]^{\eta} \tag{11}$$

where η is a smoothing constant close to one, to be determined by comparison with numerical simulations.

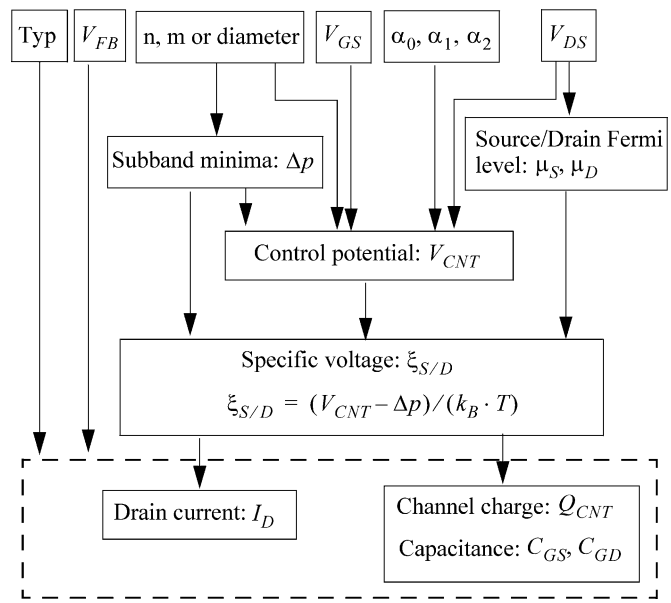

Fig. 6. Calculation steps for the CNTFET model.

Fig. 5 shows a comparison between (10) and (11). Let us note that the greatest difference is observed around zero, where (10) overestimates the quantum charge.

E. Model Implementation

Based on the original MOSFET-like CNTFET compact model introduced in [10], we have developed a new compact model including the improvements mentioned in Section III-C and D. The structure of the model is presented in Fig. 6.

The main quantities used in the model are the control potential and the specific voltage $\xi_{S(D)}$ that depends on the control potential, the sub-bands energy level Δ_p and the source (drain) Fermi level $\mu_{S(D)}$. A maximum of seven intrinsic parameters are necessary as input of this model: the fitting parameters α_0, α_1, α_2, the n and m parameters (or the diameter), the flatband voltage V_{FB}, and the TYP parameter ($= +1/-1$ for n- or p-type device).

This model also includes series resistance. It allows the simulation of CNTFETs with diameter ranging from 0.8 to 3 nm.

Two implementations of this new compact model have been developed. A first version of this model has been developed and implemented in Verilog-A [15] and a second version of the model has been developed and implemented in VHDL-AMS [16].

The model developed in Verilog-A (with ADS 2004A simulation tool) requires as input parameters the chirality vector (n, m). Hence, the minima sub-bands are precomputed with respect to (8) presented in Section III-C [15]. Moreover, the model systematically estimates the number of required sub-bands. It allows the simulation of a device with nanotube diameter ranging from 0.8 to 3 nm. The parameters α_0, α_1, and α_2 are input parameters.

The model developed in VHDL-AMS (with ADMS 4.3_1.1) is based on the smooth and continuous relationships [(10) and (12)] described in Section III-D, and thus displays excellent numerical behavior and is well suited to circuit simulation [16]. The whole code requires about 90 lines and depends on four

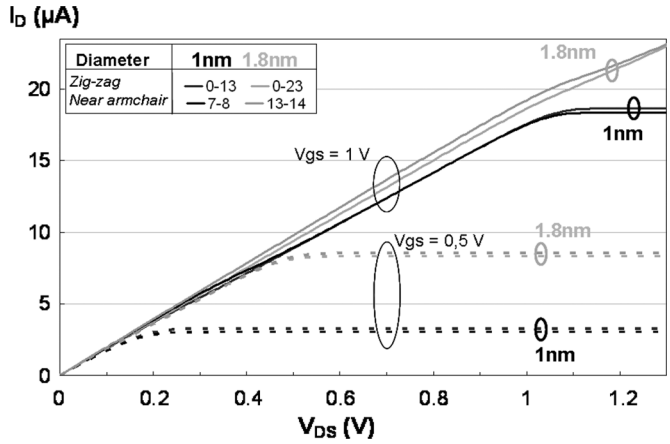

Fig. 7. Drain current versus source–drain bias with gate bias as a parameter calculated with ADS 2004A simulation tool using VerilogA.

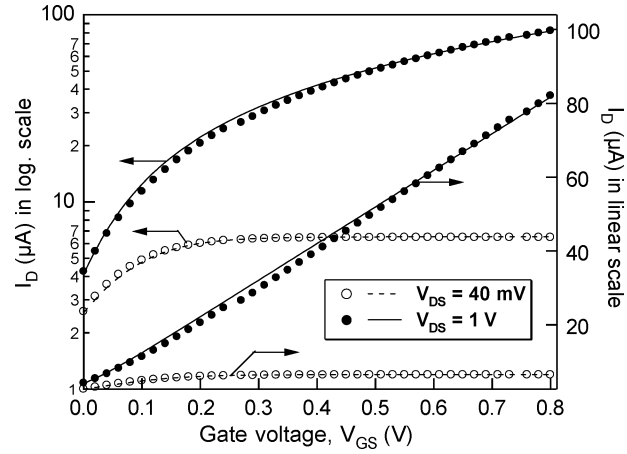

Fig. 8. Numerical (dots, cf. [17]) and analytical VHDL-AMS simulations (lines: compact model) of I_D versus $V_{\rm GS}$ for a n-type MOSFET-like CNTFET (Input parameters: $p = 1$, diameter $d = 1.4$ nm, $\rm TYP = +1, VFB = 0$).

input parameters: three intrinsic parameters (diameter, TYP and $V_{\rm FB}$) and one extrinsic parameter $(R_{\rm series})$. A significant improvement in the version is that, unlike in [10], the parameters $\alpha_{\rm i}$ (i = 0, 1, 2) are now automatically computed for any CNTs with diameters between 0.8 and 3 nm, for a given gate-oxide capacitance, or a given gate-oxide thickness.

F. DC Characteristics

Fig. 7 shows the simulated $I_D - V_{\rm DS}$ characteristic for $V_{\rm GS}$ equal to 1 V and 0.5 V, calculated using Verilog-A. The simulated MOSFET-like CNTFETs feature three radii (1, 1.4 and 1.8 nm) and, for each radius, three different helicities have been calculated. The corresponding n and m parameters are summarized in the table inset in Fig. 7. The simulation has taken into account the series resistance of 25 kΩ.

For both $V_{\rm GS}$ values (0.5, 1 V), we observed that the CNT radius has a first order impact on the drain current value. For example, for $V_{\rm GS} = 0.5$ V and $V_{\rm DS} = 1$ V, $I_D \approx 2.5$ and 8.5 mA for $\rm diameters = 1$ and 1.8 nm, respectively. The increase of the drain current with respect to the radii is directly associated with the decrease of the CNT band gap energy with its diameter [11]. The helicity angle of the CNT, from zig-zag to near armchair, also has a significant impact on the drain current, albeit less important than that of the diameter. For example, for a CNT radius equal to 1 nm and for $V_{\rm GS} = 0.5$ V and $V_{\rm DS} = 1\,V$, $I_D \approx 2.5$ mA for a zig-zag CNT and $I_D \approx 3$ mA for a chiral one.

This analysis of the related simulated dc characteristics shows that the CNT diameter and helicity angle have a significant impact on the current drain values, although not in the same proportion: the former is more significant.

Fig. 8 shows the drain current of a 1.4 nm diameter CNTFET with $C_{\rm ox} = 3.8$ pF/cm, as a function of gate voltage. The analytical and numerical simulations have been performed with VHDL-AMS and FETToy [17], respectively. An excellent agreement is found, which supports the validity of the model. The best fits were obtained with $p = 1$ (i.e. one sub-band) which is coherent because the FETToy simulator only accounts for the lowest sub-band. We emphasize that if we consider CNTFETs with diameters ranging from 0.8 to 3 nm, and with a power supply lower than 1 V, we can set $p = 5$ to describe all cases accurately. Note that the number of sub-bands p has been added as an input parameter only for test purposes [16].

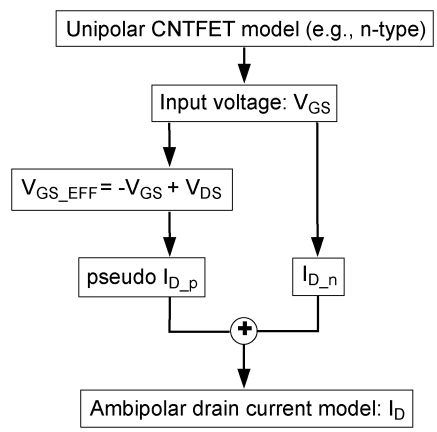

Fig. 9. Structure of the behavioral model for the ambipolar CNTFET.

G. Behavioral Model for the Ambipolar CNTFET

In addition to the MOSFET-like CNTFET model, we have developed a behavioral compact model that allows the description of the ambipolar characteristic of SB-CNTFETs. This model is built using the previously presented CNTFET model. As shown in Fig. 9, an additional part has been added to the unipolar (i.e., MOSFET-like) CNTFET model.

The very specific $I_D - V_{\rm GS}$ characteristic of the ambipolar CNTFET is illustrated in Fig. 10. It should be noted that this behavior is quite similar to the numerical simulation results recently published in [18] and [19].

Fig. 10 shows the ambipolar conduction for the SB-CNTFET. As outlined in [20], the symmetric bias condition at which electron and hole currents are equal, and thus total current is minimum, for midgap SBs (our case) is always at $V_{\rm GS} = V_{\rm DS}/2$.

Although this model is a behavioral model, it qualitatively describes the ambipolar behavior and could be used by circuit designers to devise new architectures, including analog circuit design [21]. The input parameters are the same as for the model of the MOSFET-like CNTFET (in its version implemented in VHDL-AMS).

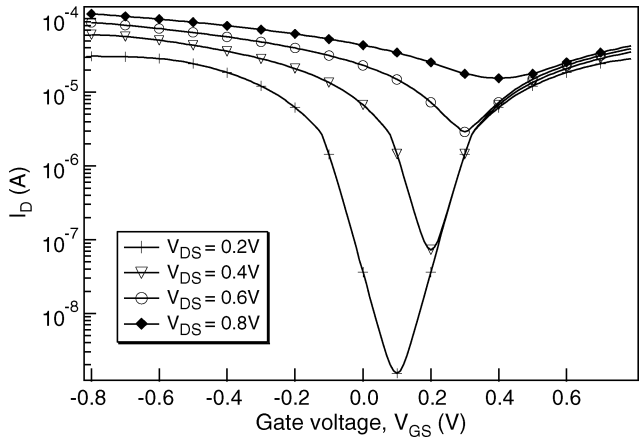

Fig. 10. VHDL-AMS simulation of the drain current as a function of gate voltage for the ambipolar CNTFET ($p = 1$, diam $= 1.4$, TYP $= +1$, VFB $= 0$).

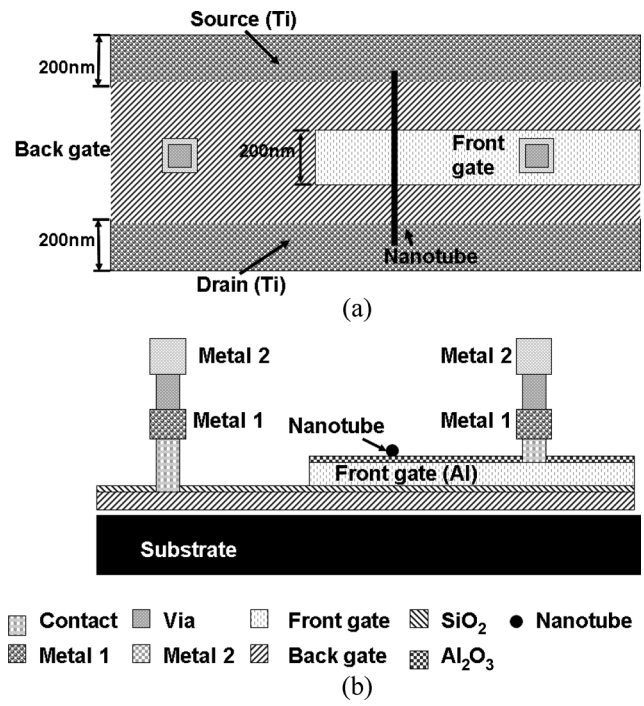

Fig. 11. (a) CNTFET DG device. (b) Cross-section view of DG-CNTFET (perpendicular to nanotube).

The input parameters can be adjusted with the help of measured characteristics, to permit the model to efficiently reproduce the response of the device.

H. Model for the CNTFET DG Device

The compact model for unipolar CNTFETs can also be adapted to reflect the ambivalent characteristics of DG-CNTFETs. Such a device was proposed in [3] to improve channel mobility and control of the off-state, and is built by placing a metal front gate terminal under the nanotube between the source and the drain (Fig. 11). The voltage of the silicon back gate $V_{\mathrm{GS-bg}}$ influences the behavior of the device in the following way.

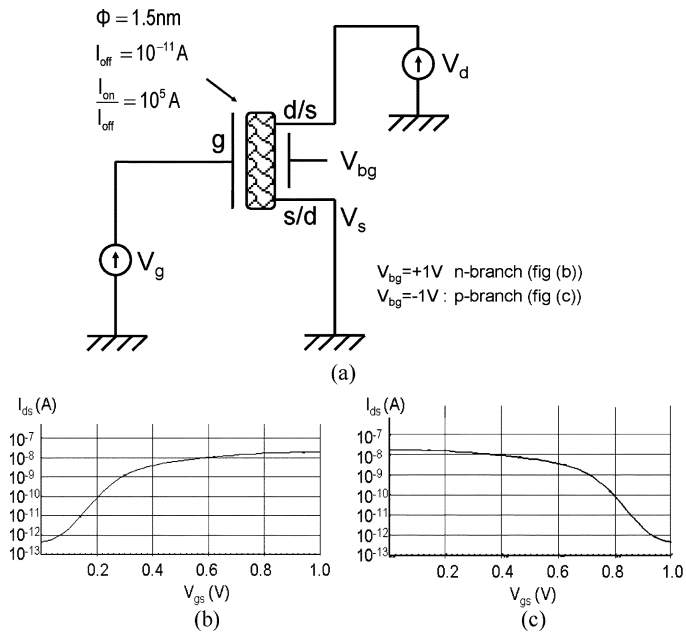

Fig. 12. DG-CNTFET simulation. (a) Simulation setup. (b) Simulated n-branch current characteristics. (c) Simulated p-branch current characteristics.

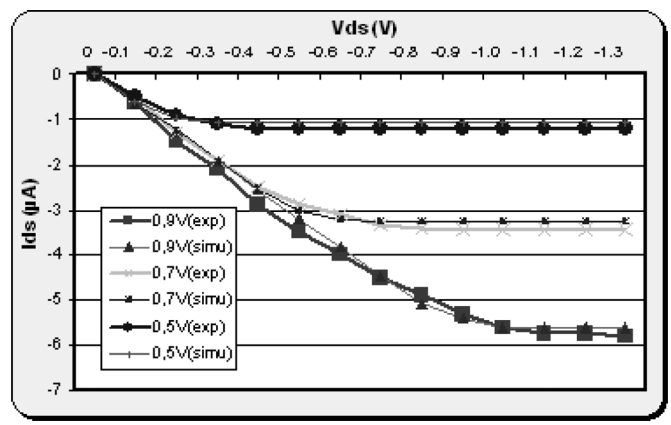

Fig. 13. Experimental $I_D(V_{\mathrm{DS}})$ [22] versus simulation results for $d = 1.0$ nm, $R_{S,D} = 75$ kΩ, and $T = 300$ K.

- When $V_{\mathrm{GS-bg}}$ is sufficiently negative (some hundreds of millivolts), the device functions like a p-type FET with a negative threshold voltage.
- When $V_{\mathrm{GS-bg}}$ is sufficiently positive (some hundreds of millivolts), the device functions like an n-type FET with a positive threshold.
- When $V_{\mathrm{GS-bg}}$ is floating, the sub-bands with the contacts are not affected by the bias of the front gate, and the device is in the off state with a very weak current ($I_{\mathrm{off}} < 100$ fA).

An electrical Verilog-A model of the DG-CNTFET was developed based on the previous unipolar (MOSFET-like) model of the single-gate CNTFET by adding a port (back gate) to control the polarity of the device as indicated previously (the influence of the back gate on I_D is not yet considered).

Fig. 12 shows the model characterization setup and the I_D/V_{GS} characteristics of the DG-CNTFET model, for n-type and p-type configurations, where $V_{\mathrm{GS-fg}}$ varies between 0 and 1 V, $V_D = 1$ V and $V_S = 0$ V. Analysis of the band diagrams

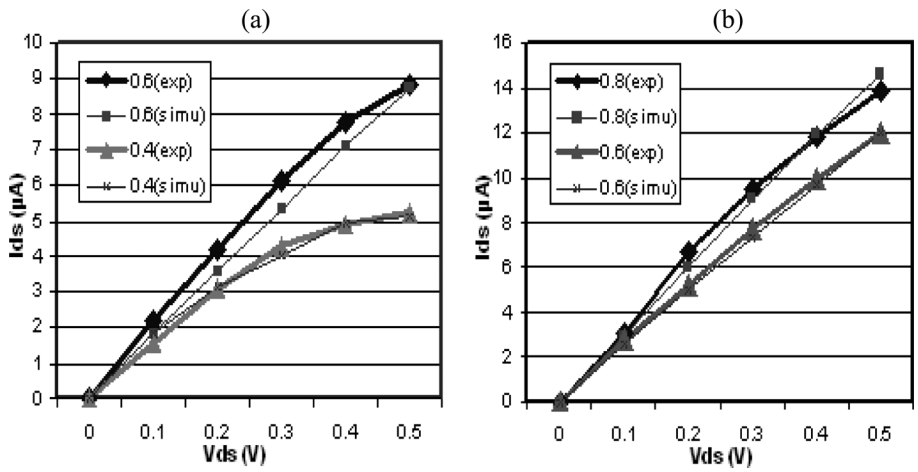

Fig. 14. (a) Experimental $I_D(V_{\rm DS})$ [5] (high-doped S/D) versus simulation results for $d = 1.65$ nm, $R_{S,D} = 15$ kΩ and $T = 300$ K. (b) Experimental $I_D(V_{\rm DS})$ [5] (moderate-doped S/D) versus simulation results for $d = 1.65$ nm, $R_{S,D} = 20$ kΩ, and $T = 300$ K.

verify that whatever the polarity of the transistor (p type or n type), the current flows in the same direction.

IV. Device Characteristics and Simulation

A. Comparison With Experimental Results

In this section, we compare some simulation results and the experimental results published in [5], [22]. For a fair comparison between experimental results and simulation results, the same nanotube diameter (d) should be used under the same operational conditions. Results are shown in Figs. 13 and 14 (the simulation was made using Verilog-A). From this comparison, we can see that: i) there is a good agreement between simulation and experimental results, especially in the saturation zone, where the current level is similar after adjusting the serial resistance; ii) the global error compared to the experimental results is about 7,5%; iii) in ohmic regime (low bias $V_{\rm DS}$), the simulated current level is lower than measured. In other words, when $V_{\rm DS}$ increases from 0 V to $V_{\rm DD}$, the simulated I_D increases more slowly than the experimental I_D. One of the reasons for this difference may be that the CNTFET model used during this part of the study has an ideal sub-threshold slope of 60 mV/decade and no flat band voltage has been introduced.

B. Influence of Parameters on the Characteristics

We performed a set of simulations to evaluate the impact of the parameter values on the device characteristics. According to the available models, CNTFETs are very sensitive to variations of the geometric parameters (tube diameter, size of the contact, oxide thickness, etc) and also to the dielectric material. As an example, the electric field penetration in the channel increases with the dielectric constant (in the region between the contact and the channel). In the following, we will focus on the influence of the diameter and contact resistance values.

$I_D(V_{\rm GS})$ and $I_D(V_{\rm DS})$ characteristics with different diameters (1 nm; 1.42 nm) are shown in Figs. 15 and 16 at $V_{\rm GS} = 0.5$ V, $V_{\rm DS} = 0.5$ V, respectively. The results show that the level of the ON current in the saturation zone noticeably increases with the diameter (Fig. 15). This stems from the correlation of the band-structure with the diameter. Using a larger diameter reduces the bandgap, therefore the ON current increases. But at

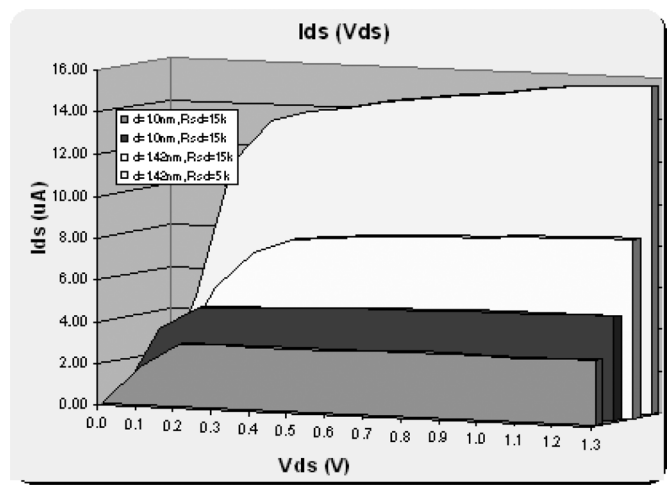

Fig. 15. Simulation of $I_D - V_{\rm DS}$ for different diameters (1.0 nm; 1.42 nm) and different contact resistance ($R_{S,D} = 5$ kΩ; 15 kΩ) at $V_{\rm GS} = 0.5$ V.

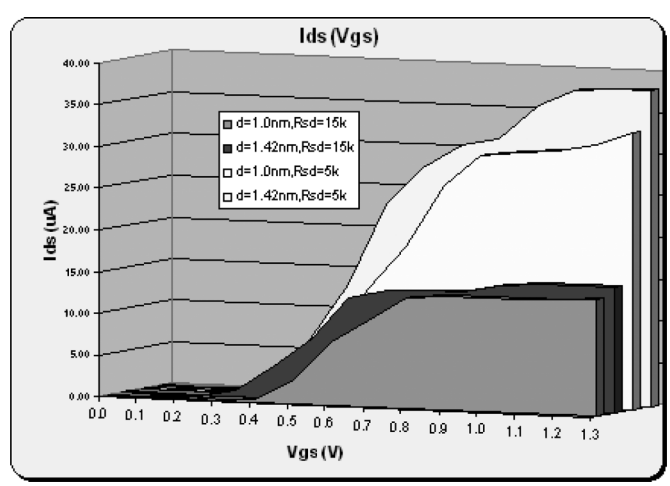

Fig. 16. Simulation of $I_D - V_{\rm GS}$ for different diameters (1.0 nm; 1.42 nm) and different contact resistance ($R_{S,D} = 5$ kΩ; 15 kΩ) at $V_{\rm DS} = 0.5$ V.

the same time, the leakage current is increased as well. This problem should be handled with care, because many applications require high ON currents, but also very low OFF currents. Furthermore, the selection of the suitable diameter will probably

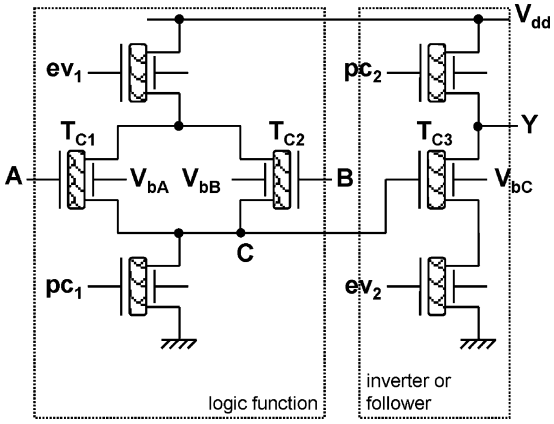

Fig. 17. Schematic of the dynamically reconfigurable 8-function logic gate.

remain a difficult problem to solve in the short term from a technology point of view. So this point must be carefully taken into account to obtain the best electrical characteristics in perspective to build reliable logic circuits based on CNTFETs. Also, when the diameter decreases, the threshold voltage increases for a given drain–source voltage $(V_{\rm DS} = 0.5)$ (Fig. 15). CNT band gaps are inversely proportional to the diameter $\rm Eg = 0.9/d$ (eV). The barrier height determines the threshold voltage of a CNTFET, which can be expressed as $V_{\rm th} = 0.45/d\,({\rm eV})$. Therefore, CNTFETs turn ON at different voltages depending on their diameters. This property will strongly influence the behavior of any logic gate based on CNTFETs, and should therefore also be taken into account with care.

We also studied the impact of the contact resistance $R_{S,D}$ (Figs. 15 and 16). The results show a noticeable influence on the ON current levels in the saturation zone, but in that case the threshold voltage does not change.

V. Reconfigurable CNTFET-Based Logic-Circuit Design

The use of CNTFET technology to directly transpose existing CMOS-based logic structures has been proved experimentally both with resistive-load gates [23] and complementary logic [24], [25]. Specific CNTFET properties have also been used in multiple-valued logic [26] and in single transistor XOR gates [27]. We describe a family of novel dynamically reconfigurable logic cells using the ambivalence property of DG-CNTFETs. The functionality of these cells is impossible to realize in CMOS technology without resorting to far more complex circuitry with significant system power penalties. Based on the modeling concepts presented in Section III, simulation results are given for a cell at 20-GHz operation. We also give an example of the use of these cells in reconfigurable logic-circuit design.

A. Dynamically Reconfigurable 8-Function Logic Gate

The dynamically reconfigurable 8-function logic cell (CNT-DR8F, Fig. 17) is composed of seven DG-CNTFETs organized in two logic stages (logic function and follower/inverter). The polarities (n type/p type) of DG devices T_{C1}, T_{C2} and T_{C3} are controlled by the corresponding back-gate bias voltages $V_{\rm bA}$, $V_{\rm bB}$, and $V_{\rm bC}$, as previously explained; the cell may thus be configured to one of eight basic binary operation modes (shown in Table III).

TABLE III
Three-Input Configurations and Corresponding Eight Basic Binary Logic Functions for CNT-DR8F

V_{bA}	V_{bB}	V_{bC}	Y	Power (nW) @20GHz	Power (nW) @250MHz
+V	+V	+V	$\overline{A+B}$	895.7	32.2
+V	+V	-V	$A+B$	848.6	31.29
-V	-V	+V	$A \bullet B$	725.7	25.89
-V	-V	-V	$\overline{A \bullet B}$	686	24.98
+V	-V	+V	$\overline{A}B$	874.6	32.26
+V	-V	-V	$A+\overline{B}$	834.8	31.33
-V	+V	+V	$A\overline{B}$	828.3	31.93
-V	+V	-V	$B+\overline{A}$	788.1	31.1

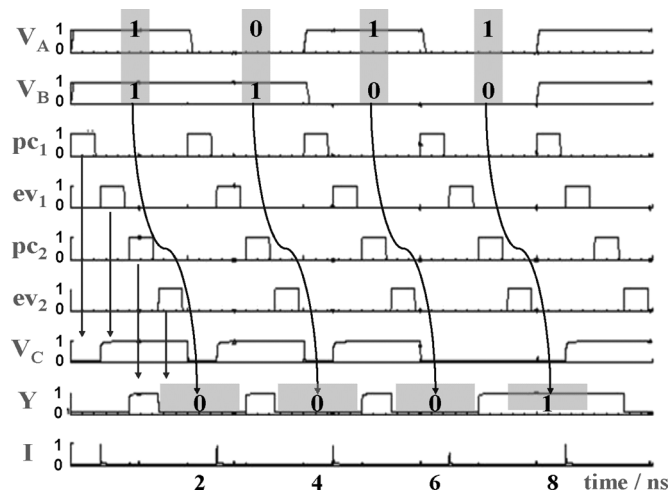

Fig. 18. Simulation results of the CNT-DR8F cell in NOR configuration.

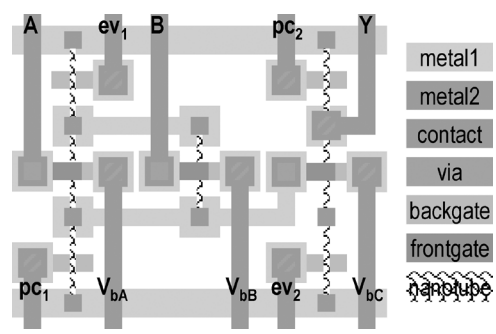

Fig. 19. Layout of the CNT-DR8F using arbitrary design rules.

In the CNT-DR8F cell, there are seven inputs and one output:

- two boolean data inputs A and B (logic levels represented by the supply voltage values 0 and 1 V);
- three control inputs to configure the circuit according to Table III—$V_{\rm bA}$, $V_{\rm bB}$, $V_{\rm bC}$ (back-gate bias voltages are -1 V for p-type polarity and $+1$ V for n-type polarity);
- a four-phase clocking signal set consisting of two precharge inputs $\rm pc_1$, $\rm pc_2$ and two evaluation inputs $\rm ev_1$, $\rm ev_2$. The signals are non-overlapping as in classical CMOS dynamic logic gates;
- circuit output Y.

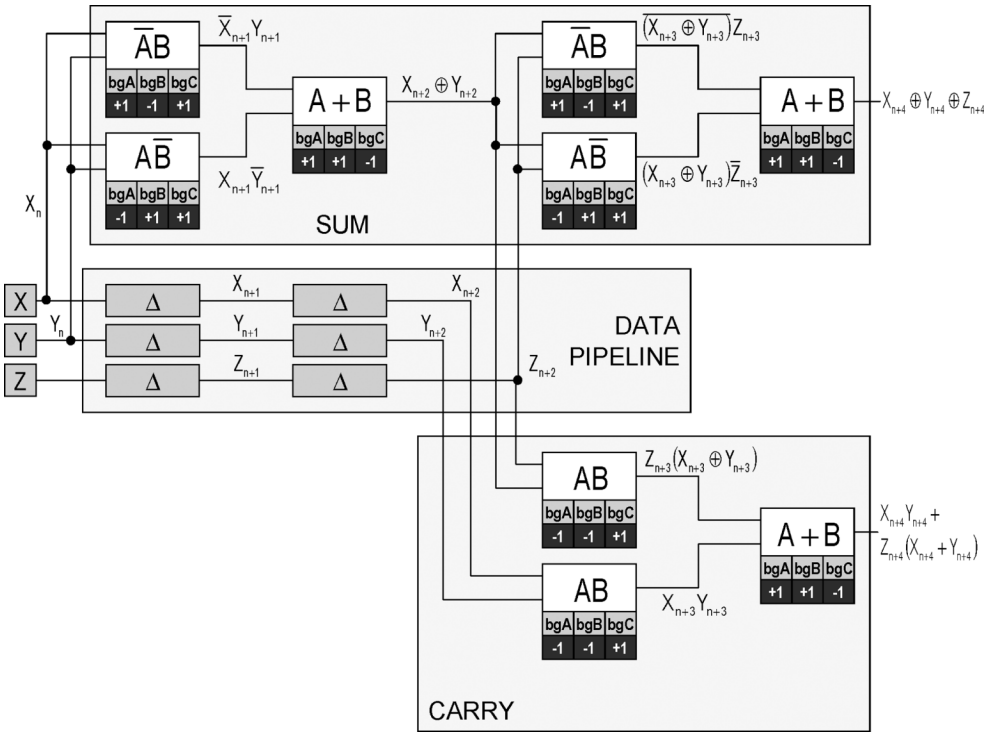

Fig. 20. Schematic of the pipelined full adder using associations of CNT-DR8F gates.

An example explains how this logic gate works. When $V_{\mathrm{bA}} = V_{\mathrm{bB}} = V_{\mathrm{bC}} = 1\ V$, CNTFETs T_{C1}, T_{C2}, and T_{C3} (as shown in Fig. 17) are all configured as n-type FETs, as indicated in the previous section. When pc_1 is enabled, the first logic stage is precharged, and the voltage of the internal node C (V_C) is discharged to 0 V. Then, when ev_1 is enabled, if either of the data inputs A or B is equal to logic "1," the first stage evaluates its output such that the internal node C is set to logic "1." Then, pc_2 is enabled (precharge of the second logic stage), and the output Y is charged to logic "1;" and when ev_2 is enabled, the output is evaluated and Y is evaluated at logic "0." This shows that for $V_{\mathrm{bA}} = V_{\mathrm{bB}} = V_{\mathrm{bC}} = 1$ V, the CNT-DR8F cell is configured as a NOR operator. Simulation results of CNT-DR8F in this configuration are shown in Fig. 18.

Fig. 19 shows the layout of the CNT-DR8F cell using arbitrary design rules. This layout exploits the approach of building a complementary logic circuit along the length of a single nanotube (through doping or oxidizing schemes) as an association of intra-molecular gates. Here transistors T_{C1} and T_{C3} are associated with precharge and evaluation transistors $\mathrm{pc}_1/\mathrm{ev}_1$ and $\mathrm{pc}_2/\mathrm{ev}_2$, respectively. In a system architecture, a single CNT could span several logic cells and thus considerably simplify fabrication issues by requiring a reduced number of individual CNTs. In addition, when the CNT pitch is significantly less than metal track dimensions, a discretized design approach may also be applied to build a CNT planar array for each device [28]. This can be used both as an approach to increase I_{on} without increasing footprint, and as a method to improve reliability.

Parasitic capacitances of the order of 40 aF are estimated from the main geometrical and technological parameters of the physical implementation extracted from the design rules of a typical current state-of-the-art CMOS technology. These are essential for quantitative estimations of two dynamic characteristics: the delay time (for each stage of the circuit, defined as the time interval between the beginning of the evaluation period and the instant when the output is established) and the minimal latency time (defined as the propagation time of the whole circuit from the first precharge operation until the output is established—this depends of course on the number of stages of the circuit and the maximum working frequency).

For CNT-DR8F, the delay time is about 7 ps and the minimal latency time is less than 40 ps (for $L_{\mathrm{g}} = 65$ nm, the theoretical transition frequency of CNTFETs is about 800 GHz, as estimated by IBM [29]). The average total power consumption can also be obtained through simulation and is shown in Table III with CNT-DR8F working at 250 MHz and 20 GHz.

B. Evaluation of CNT-DR8F in Full Adder Application

CNT-DR8F has been used to build a full adder as an example to evaluate the use of CNT-DR8F for designing complex gates. To build a complex gate with CNT-DR8F, the logical function has to be translated into a combination of 2-input elementary terms. A full adder is composed of two operators: a sum gate (3-input XOR) and a carry generator as described by the well-known equations

$$\mathrm{Sum} = X \oplus Y \oplus Z \tag{12}$$

$$\mathrm{Carry} = X.Y + Z(X + Y). \tag{13}$$

The translation of an n-input complex gate into a combination of 2-input Boolean gates leads to a pipeline architecture. The sum gate and the carry generator are made up of 4 layers (6 cells) and 2 layers (3 cells), respectively. Because of the dynamic behavior of CNT-DR8F, it is necessary to insert a 2-layer

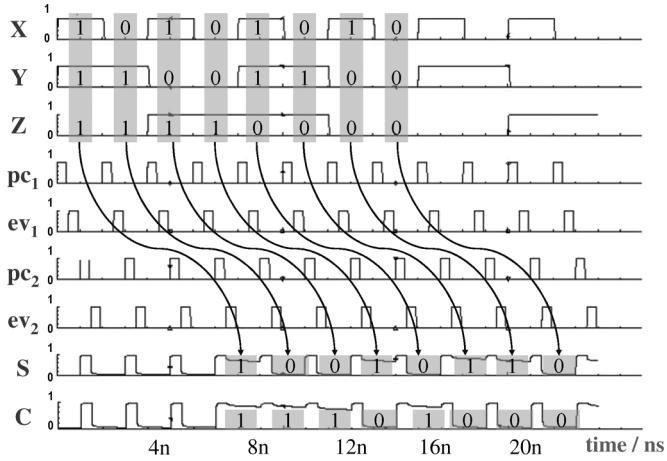

Fig. 21. Simulation results for the 1-bit pipelined full adder.

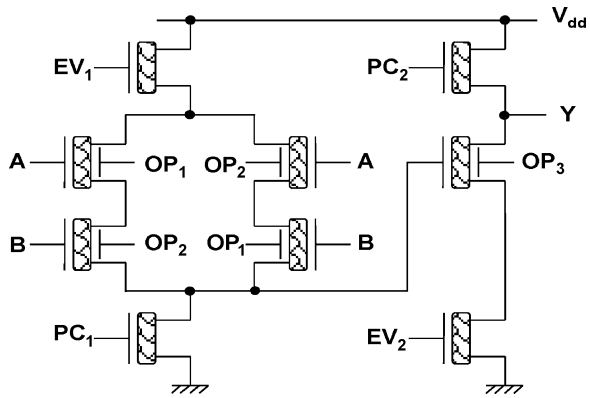

Fig. 22. Schematic of the dynamically reconfigurable 8-function logic gate.

data pipeline composed of delay elements (flip-flops) to take into account the latency in the pipeline structure.

Fig. 20 shows the whole structure of the full adder. For clarity, the 4-phase clock signals and master clock signal used for the CNT-DR8F cells and D flip-flops, respectively, are not represented.

Fig. 21 shows the simulation results for the Sum and Carry operators, respectively. The latency time is shown in each figure.

We have thus demonstrated the use of a universal reconfigurable cell based on double gate CNTFETs which may be used to synthesize any combinatorial Boolean function. The results presented in this section are a step towards the quantitative comparison of the performance of CNTFET-based dynamic logic circuits with analogous circuits based on state-of-the-art CMOS technology.

We have also compared classical and look-ahead 4-bit adders with the association of CNT-DR8F cells; the classical 4-bit adder requires 16 clock cycles to generate the output while the look-ahead 4-bit adder needs 12 clock cycles. For an n-bit adder, the latency time of the look-ahead and classical structures is $2(n+1)$ and $4n$ clock cycles, respectively, which means that for an adder with more than 4 bits, the look-ahead adder is more realistic in terms of latency time.

Several universal reconfigurable cells based on the same concept as that of CNT-DR8F, but with a function set allowing reduced latency, are now presented and shown to alleviate the influence of the pipeline architecture on latency time.

TABLE IV
3-INPUT CONFIGURATIONS AND CORRESPONDING EIGHT BASIC BINARY LOGIC FUNCTIONS FOR CNT-DR6F

OP_1	OP_2	OP_3	Y
+V	+V	+V	$\overline{A.B}$
+V	+V	-V	A.B
+V	-V	+V	$\overline{A \oplus B}$
+V	-V	-V	$A \oplus B$
-V	+V	+V	$\overline{A \oplus B}$
-V	+V	-V	$A \oplus B$
-V	-V	+V	A+B
-V	-V	-V	$\overline{A+B}$

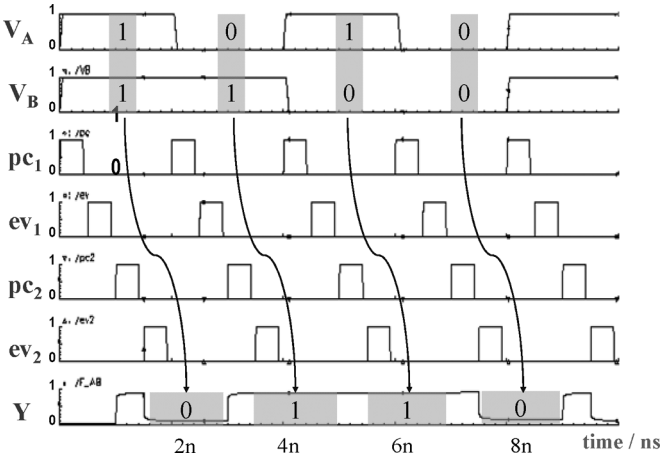

Fig. 23. Simulation results of the CNT-DR6F cell in XOR configuration.

C. Dynamically Reconfigurable 6-Function Logic Gate

Another dynamically reconfigurable logic gate (CNT-DR6F) is presented in Fig. 22. It is built with two extra DG-CNTFETs with respect to CNT-DR8F, and can realize a more classical function set (including $A \oplus B$, $\overline{A \oplus B}$). The control inputs and the corresponding logic functions are shown in Table IV.

CNT-DR6F works in a similar way as CNT-DR8F. When it is configured as $\mathrm{OP}_1 = +V$, $\mathrm{OP}_2 = -V$ or $\mathrm{OP}_1 = -V$, $\mathrm{OP}_2 = +V$, the only situation under which the voltage of the internal node C (V_C) is set to logic "1" is when inputs A and B are different (i.e. XOR2 function). The simulation result when CNT-DR6F operates as XOR2 is presented in Fig. 23.

D. CNT-ALU3F

We now propose a more complex logic gate (CNT-ALU3F, shown in Fig. 24) which has three boolean data inputs (A, B, C); 2 control inputs $(\mathrm{OP}_1, \mathrm{OP}_2)$; and a four-phase non-overlapping clock signal as presented previously. This gate can realize three main functions—AND, NOR, and full adder. The two control inputs and three corresponding functions are shown in Table V. This gate has two outputs S and C (Sum and Carry when configured to a full adder). The part to generate the Sum output is built with two stages of CNT-DR6F to realize XOR3; while the part to generate the Carry output is a structure that cannot be reconfigured. The simulation result is shown in Fig. 25 for when CNT-ALU3F is configured as a full adder.

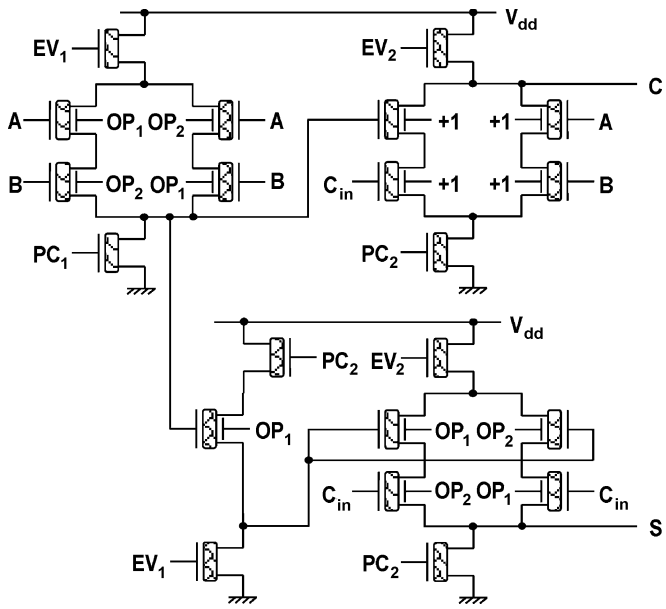

Fig. 24. Schematic of CNT-ALU3F.

TABLE V
TWO-INPUT CONFIGURATIONS AND CORRESPONDING THREE BASIC BINARY LOGIC FUNCTIONS OF CNT-ALU3F

OP_1	OP_2	Y	C
+V	+V	$A.B.C_{in}$	A.B
+V	-V	A⊕B⊕Cin	AB+Cin(A+B)
-V	+V		
-V	-V	A+B+Cin	$AB+\overline{AB}Cin$

The main advantage of this cell is that it requires only one clock cycle to generate the Sum and Carry when it is configured as a full adder, while the full adder with the association of 9 CNT-DR8F requires four clock cycles because of the pipeline architecture.

This gate can also act as a classical 1-bit algorithmic logic unit (ALU). Further, with a multiplexer and two extra control inputs S_2 and S_1 to define data input B' as B, $\overline{B}$, 1 or 0; and two other multiplexers and control input S_0 to: i) enable $C_{\rm in}$; and ii) choose between S and C as the overall arithmetic or logic output, the CNT-ALU3F can be used as a 1-bit 10 function ALU. The circuit is shown in Fig. 26, while the control inputs and main functions for an n-bit ALU are shown in Table VI.

VI. CONCLUSION

This paper provided an overview of the different types of CNTFETs and summarized some important aspects of ballistic behavior. A physics-based calculation of the minima of energy conduction sub-bands was implemented in a compact model. This calculation, obtained from a zone-folding method, is precomputed within the model flow diagram. Compact models

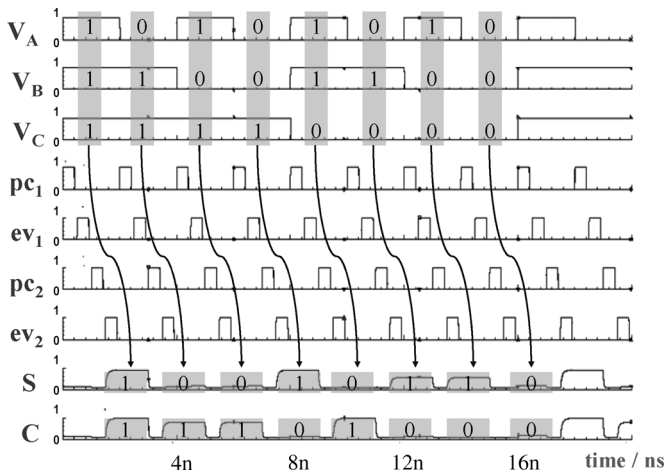

Fig. 25. Simulation results of the CNT-ALU3F cell in full adder configuration.

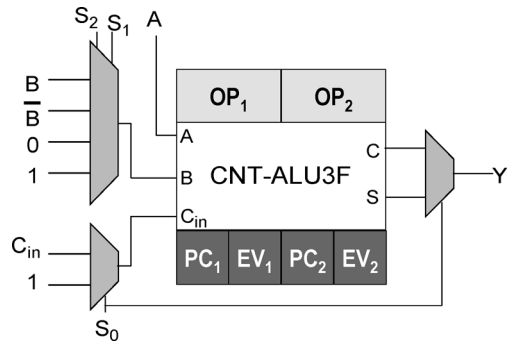

Fig. 26. Use of CNT-ALU3F as a 1-bit 10-function ALU.

TABLE VI
SELECTION AND OPERATION CODES FOR MAIN n-bit ALU FUNCTIONS

$S_2S_1S_0^{n>0}$	$S_2S_1S_0^{n=0}$	OP_1	OP_2	Y
000	000	+V	-V	transfer(B)
000	001	+V	-V	inc(B)
010	010	+V	-V	add(A,B)
001	001	+V	-V	or(A,B)
100	101	+V	-V	sub(B,A)
110	110	+V	-V	dec(B)
001	001	-V	-V	inv(B)
000	000	+V	+V	0
011	011	+V	+V	and(A,B)
011	011	-V	-V	xnor(A,B)

suitable for circuit simulation were introduced, taking into account ambipolar behavior of SB-CNTFETS and ambivalence of DG-CNTFETs. Using the first type of model, analysis of the dc characteristics showed that the CNT diameter and helicity angle have significant impact on the drain current. Using the second type of model, a dynamically reconfigurable 8-function logic gate (CNT-DR8F) using a DG-CNTFET was introduced, and from first layout and simulations we have estimated its power consumption and transient parameters. Finally, CNT-DR8F has been considered as a universal reconfigurable cell enabling the synthesis of any Boolean function. Such dynamically reconfigurable universal cells exhibit the possibility to realize dense,

regular and highly reconfigurable circuits in platform-based system-on-chip design.

ACKNOWLEDGMENT

The authors wish to acknowledge fruitful discussions with all partners in the Nanosys project, and in particular E. Belhaire, H. Cazin d'Honincthun, and V. Derycke.

REFERENCES

[1] D. Rondoni and J. Hoekstra, "Towards models for CNT devices," in *Proc. IEEE RISC'05*, 2005, pp. 272–278.

[2] J. Guo, S. Datta, and M. Lundstrom, "Assessment of silicon MOS and carbon nanotube FET performance limits using a general theory of ballistic transistors," in *Proc. IEDM'02*, San Francisco, CA, 2002, pp. 711–715.

[3] S. J. Wind, J. Appenzeller, and P. Avouris, "Lateral scaling in carbon-nanotube field-effect transistors," *Phys. Rev. Lett.*, vol. 91, no. 5, pp. 058301-1–058301-4, Aug. 2003.

[4] Y. Lin, J. Appenzeller, J. Knoch, and P. Avouris, "High-performance carbon nanotube field-effect transistor with tunable polarities," *IEEE Trans. Nanotechnol.*, vol. 4, no. 9, Sep. 2005.

[5] A. Javey *et al.*, "High performance n-type carbon nanotube field-effect transistors with chemically doped contacts," *Nano Lett.*, vol. 5, no. 2, pp. 345–348, 2005.

[6] J. Appenzeller *et al.*, "Comparing carbon nanotube transistors—the ideal choice: A novel tunneling device design," *IEEE Trans. Electron Devices*, vol. 52, no. 12, pp. 2568–2576, Dec. 2005.

[7] W. Hoenlein *et al.*, "Carbon nanotubes for microelectronics: Status and future prospects," *Mater. Sci. Eng. C23*, pp. 663–669, 2003.

[8] P. Avouris, J. Appenzeller, R. Martel, and S. J. Wind, "Carbon nanotube electronics," *Proc. IEEE*, vol. 91, no. 11, pp. 1772–1784, Nov. 2003.

[9] R. Saito, M. S. Dresselhaus, and G. Dresselhaus, *Physical Properties of Carbon Nanotubes*. London, UK, U.K.: Imperial College Press, 1998.

[10] A. Raychowdhury, S. Mukhopadhyay, and K. Roy, "A circuit-compatible model of ballistic carbon nanotube field-effect transistors," *IEEE Trans. Comput.-Aided Design Integr. Circuits Syst.*, vol. 23, no. 10, pp. 1411–1420, Oct. 2004.

[11] S. Datta, *Quantum Transport—Atom to Transistor*. Cambridge, U.K.: Cambridge University Press, 2005.

[12] H. Cazin d'Honincthun, S. Galdin-Retailleau, J. Sèe, and P. Dollfus, "Electron–phonon scattering and ballistic behavior in semiconducting carbon nanotubes," *Appl. Phys. Lett.*, vol. 87, p. 172112, 2005.

[13] V. N. Popov and L. Henrard, "Comparative study of the optical properties of single-walled carbon nanotubes within orthogonal and nonorthogonal tight-binding models," *Phys. Rev. B*, vol. 70, pp. 115;407-1–115407-12, 2004.

[14] C. Enz, F. Krummenacher, and E. Vittoz, "An analytical MOS transistor model valid in all regions of operation and dedicated to low-voltage and low-current applications," *J. AICSP*, pp. 83–114, 1995.

[15] C. Maneux, J. Goguet, S. Frégonèse, and T. Zimmer, "Analysis of CNTFET physical compact model," in *Proc. IEEE Int. Conf. Design Test Integr. Syst. (DTIS) Nano.Technol.*, 2006, pp. 40–45.

[16] F. Prégaldiny, C. Lallement, and J.-B. Kammerer, "Design-oriented compact models for CNTFETS," in *Proc. IEEE Int. Conf. Design Test Integr. Syst. (DTIS) Nano.Technol.*, Tunis, 2006, pp. 34–39.

[17] NANOHUB Online Simulations and More, CNT Bands, NANOHUB, Apr. 2006 [Online]. Available: http://www.nanohub.org

[18] J. Knoch, S. Mantl, and J. Appenzeller, "Comparison of transport propoerties in carbon nanotube field-effect transistors with Schottky contacts and doped source/drain contacts," *Solid-State Electron.*, vol. 49, pp. 73–76, 2005.

[19] J. Guo, S. Datta, and M. Lundstrom, "A numerical study of scaling issues for Schottky-barrier carbon nanotube transistors," *IEEE Trans. Electron Devices*, vol. 51, no. 2, pp. 172–177, Feb. 2004.

[20] A. Hazeghi, T. Krishnamohan, and H.-S. P. Wong, "Schottky-barrier carbon nanotube field-effect transistor modeling," *IEEE Trans. Electron Devices*, vol. 54, no. 3, pp. 439–445, Mar. 2007.

[21] F. Prégaldiny, J.-B. Kammerer, and C. Lallement, "Compact modeling and applications of CNTFETS for analog and digital circuit design," in *Proc. IEEE ICECS*, Nice, France, Dec. 10–13, 2006, pp. 1030–1033.

[22] A. Javey *et al.*, "High-K dielectrics for advanced carbon nanotube transistors and logic gates," *Nature Mater.*, vol. 1, pp. 241–246, 2002.

[23] A. Bachtold, P. Hadley, T. Nakanishi, and C. Dekker, "Logic circuits with carbon nanotube transistors," *Sci*, vol. 294, no. 5545, pp. 1317–1320, Nov. 9, 2001.

[24] R. Martel, V. Derycke, J. Appenzeller, S. Wind, and P. Avouris, "Carbon nanotube field-effect transistors and logic circuits," in *Proc. 39th Design Autom. Conf.*, New Orleans, LA, Jun. 10–14, 2002, pp. 94–98.

[25] Z. Chen, J. Appenzeller, Y.-M. Lin, J. Sippel-Oakley, A. G. Rinzler, J. Tang, S. J. Wind, P. M. Solomon, and P. Avouris, "An integrated logic circuit assembled on a single carbon nanotube," *Sci*, vol. 311, no. 5768, pp. 1735–11735, Mar. 24, 2006.

[26] A. Raychowdhury and K. Roy, "Carbon-nanotube-based voltage-mode multiple-valued logic design," *IEEE Trans. Nanotechnol.*, vol. 4, no. 2, pp. 168–179, Mar. 2005.

[27] R. Sordan, K. Balasubramanian, M. Burghard, and K. Kern, "Exclusive-OR gate with a single carbon nanotube," *Appl. Phys. Lett.*, vol. 88, p. 053119, 2006.

[28] J.-M. Bethoux, H. Happy, G. Dambrine, V. Derycke, M. Goffman, and J.-P. Bourgoin, "An 8-GHz f_t carbon nanotube field-effect transistor for gigahertz range applications," *IEEE Electron Dev. Lett.*, vol. 27, no. 8, pp. 681–683, Aug. 2006.

[29] J. Guo, S. Hasan, A. Javey, G. Bosman, and M. Lundstrom, "Assessment of high-frequency performance potential for carbon nanotube transistors," *IEEE Trans. Nanotechnology*, vol. 4, no. 6, pp. 715–721, Nov. 2005.

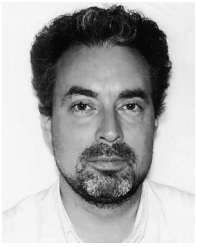

Ian O'Connor (S'95–M'98) was born in Cambridge, U.K., in 1969. He received the European M.Sc. degree in electronics engineering from the University of Essex, Essex, U.K., in 1992, the Ph.D. degree in electronics from the University of Lille, Lille, France, in 1997, and the professoral dissertation (Habilitation à Diriger des Recherches) from École Centrale de Lyon, Ecully, France, in 2005.

From 1993 to 1997, he was a Research and Teaching Assistant with the Institut Supérieur d'Electronique du Nord, Nord, France, and from 1997 to 1998, he was a Senior CAD Engineer with Philips Semiconductors, U.K. He joined École Centrale de Lyon in 1998 as Associate Professor, where he is currently Head of the Heterogeneous Design Group at the Lyon Institute of Nanotechnology, of which he is also one of the vice-directors. His research interests include design methods and tools for physically heterogeneous systems on chip, and their application to novel architectures based on non-conventional devices. He has authored or co-authored well over 70 book chapters, journal publications and conference papers and has presented invited papers at several major conferences.

Junchen Liu was born in Shandong, China, in 1980. She received the B.Sc. degree in electrical engineering from Beihang University (BUAA), Beijing, China, in 2003, the M.Sc. degree in electronics from École Centrale de Lyon, Ecully, France in 2005. She is currently pursuing the Ph.D. degree at the Lyon Institute of Nanotechnology, École Centrale de Lyon.

Her research interests concern the design of novel circuit structures based on emerging devices.

Frédéric Gaffiot was born in 1959. He received the graduate degree in applied physics from École Normale Supérieure de Cachan, Cachan, France, and the Ph.D. degree in micro-electronics from the Lyon Institute of Nanotechnology (previously Laboratory of Electronics, Optoelectronics and Microsystems) at École Centrale de Lyon, Ecully, France, in 1987.

He was an Associate Professor at École Centrale de Lyon from 1985 to 2000, and has been a full Professor since 2001. His research fields involve analog and mixed-signal circuit design, behavioral modeling, multi physics design, optical interconnects, system-on-chip design, and wireless sensor networks. He is author or co-author of about 70 reviewed journal or proceeding papers.

Fabien Prégaldiny was born in France in 1977. He received the M.S. and Ph.D. degrees in microelectronics from Louis Pasteur University (ULP), Strasbourg, France, in 2001 and 2003, respectively.

His doctoral research pertained to the modeling and simulation of deep-sub-micron MOSFETs. In 2004, he joined the École Nationale Supérieure de Physique de Strasbourg (ENSPS), Strasbourg, France, as an Associate Professor, and the National Center for Scientific Research (CNRS) at the Laboratory of Physics and Applications of Semiconductors (PHASE). Since January 2005, he has been with the Institut d'Electronique du Solide et des Systèmes (InESS) Research Institute, Illkirch, France, which is a joint laboratory of the ULP and CNRS. His research interests focus on compact modeling and simulation of advanced semiconductor devices like carbon nanotube field-effect transistor (CNTFET), double-gate MOSFET, and FinFET. He is also interested in the use of the VHDL-AMS hardware description language in compact modeling.

Christophe Lallement (M'96) received the Ph.D. degree from École Nationale Supérieure des Télecommunications (ENST), Paris, France, in 1993.

From 1994 to September 1997, he was a Postdoctoral Research Scientist at the laboratory of Electronics, Swiss Federal Institute of Technology (EPFL), Lausanne, Switzerland, working on the characterization and modeling of the MOSFET transistor in the development team of the EKV MOST model. In September 1997, he joined the Louis Pasteur University (ULP), Strasbourg, France, as an Associate Professor, and the National Center for Scientific Research (CNRS), Laboratory for Physics and Applications of Semiconductors (PHASE laboratory). Since September 2003, he has been Professor at the Engineering School, École Nationale Supérieure de Physique de Strasbourg (ENSPS), Strasbourg, France. His current research, now at the Institut d'Electronique du Solide et des Systèmes (InESS), Illkirch, France, focuses on the study and modeling of advanced devices, and on the modeling of mixed-signal systems with VHDL-AMS. He is the responsible for the group "Integrated instrumental systems" at InESS.

Cristell Maneux was born in France, in 1968. She received the Ph.D. degree in electronics from the University of Bordeaux, Talence, France, in 1998.

Her Ph.D. topic was on the study of failure mechanisms of GaAs-based heterojunction bipolar transistors (HBts). Since 1998, she has been Associate Professor at the University of Bordeaux, and her current research topics are the evaluation of the III-V HBT reliability and the modeling of the Si/SiGe HBT, both using physical simulation. Since 2005, she has initiated a new research topic on the development of Carbon Nanotube Transistor compact modeling.

Johnny Goguet was born in France in 1982. He received the M.Sc. degree in microelectronics from the University of Bordeaux 1, Talence, France, in 2005. He is currently pursuing the Ph.D. degree in carbon nanotube compact modeling at the IMS Laboratory, Bordeaux, France.

Sébastien Frégonèse was born in Bordeaux, France, in 1979. He received the M.Sc. and Ph.D. degrees in electronics from the University of Bordeaux, Talence, France, in 2002 and 2005, respectively.

During his Ph.D. research, he investigated bulk and thin system-on-insulator SiGe heterojunction bipolar transistors, with emphasis on compact modeling. From 2005 to 2006, he worked at the Technical University of Delft, Delft, The Netherlands, as a Postdoctoral Researcher, where his research activities dealt with Si strain field-effect transistor emerging devices, focusing on process and device simulation. He recently returned to the University of Bordeaux to work on the compact modeling of carbon nanotubes.

Thomas Zimmer was born in Wollbach, Germany. He received the M.Sc. degree in physics from the University of Würzburg, Würzburg, Germany, in 1989, and the Ph.D. degree in electronics from the University of Bordeaux 1, Talence, France, in 1992.

Since 2003, he has been a Professor at the University of Bordeaux 1. His research focuses on the characterization and modeling of high frequency devices, in particular Si/SiGe heterojunction bipolar transistors and future emerging devices such as carbon nanotube field effect transistors. He is the co-founder of the company XMOD Technologies, **city?**, France, and he has published about 100 technical papers related to his research.

Lorena Anghel (M'02) received the B.Sc. and M.Sc. in electrical engineering and telecommunications from the Polytechnic Institute of Bucharest, Bucharest, Romania, in 1996 and 1997, respectively, and the Ph.D. degree from the National Polytechnic Institute of Grenoble (INPG), Grenoble, France.

She is currently an Associate Professor at the same institution and a member of the research staff at the Techniques of Informatics and Microelectronics for Computer Architectures (TIMA) Laboratory, Grenoble, France. Her research interests include VLSI testing, fault tolerance, soft errors, reliable design, timing optimization, power analysis and optimization.

Dr. Anghel has been an Organizing Committee member of IEEE VLSI Test Symposium, IEEE On-Line Test Symposium, and Program Committee member of several fault design and tolerance and testing conferences such as IEEE Latin American Test Workshop, IEEE Design and Fault Tolerance. She was General Chair of IEEE On-Line Test Symposium in 2005, and Program Chair of School on the Effects of Radiation on Embedded Systems for Space Applications (SERESSA) in 2006 and 2007. She has been involved in European Projects and several Media projects, as well as being coordinator of national projects. Dr. Anghel has been the recipient of several Best Paper Awards, including at the Design Automation and Test in Europe (DATE), and the IEEE VLSI Test Symposium (VTS) conferences.

Trong-Trinh Dang was born in Vinh-Phuc, Vietnam, in 1978. He received the B.Sc. degree in electronics and telecommunication from Vietnam National University of Hanoi (VNUH), Hanoi, Vietnam, in 2001, and the M.Sc. degree in micro and nano-electronics from the Joseph Fourier University, Grenoble, France, in 2005. He is currently working toward the Ph.D. degree at the National Polytechnic Institute of Grenoble (INPG), Grenoble, France.

His research interests are focused on logic applications of carbon nanotube field-effect transistors (CNTFETs).

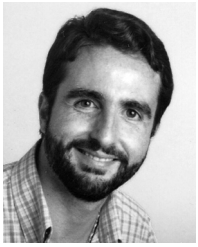

Régis Leveugle (M'91) received the Ph.D. degree in microelectronics from the National Polytechnic Institute of Grenoble (INPG), Grenoble, France, in 1990.

He is currently Professor at the same institute and Vice-Director of the Techniques of Informatics and Microelectronics for Computer Architectures (TIMA) Laboratory, Grenoble, France. His main interests are computer architecture, VLSI design methods and CAD tools, fault-tolerant architectures, concurrent checking and dependability analysis. He has authored or co-authored more than 100 scientific papers and served as a reviewer for many journals and conferences. He has also served on many program and organization committees. He was General co-Chair for Defect and Fault Tolerance in VLSI Systems (DFT) 2002, vice General Chair for the IEEE International Online Testing Workshop (IOLTW) 2002, Program co-Chair for DFT 2001, IEEE International Online Testing Symposium (IOLTS) 2004, and IOLTS 2006, and vice Program Chair for IOLTS 2003, IOLTS 2005, and IOLTS 2007.

View publication stats