ResearchGate

See discussions, stats, and author profiles for this publication at: https://www.researchgate.net/publication/354449729

A review on the design of Ternary Logic Circuits

Article *in* Chinese Physics B · December 2021

DOI: 10.1088/1674-1056/ac248b

CITATIONS
30

READS
2,370

4 authors, including:

Xiao-Yuan Wang
Hangzhou Dianzi University
3 PUBLICATIONS **124** CITATIONS

SEE PROFILE

Chuan-Tao Dong
Hangzhou Dianzi University
5 PUBLICATIONS **62** CITATIONS

SEE PROFILE

Zhi-Ru Wu
Hangzhou Dianzi University
4 PUBLICATIONS **48** CITATIONS

SEE PROFILE

All content following this page was uploaded by Xiao-Yuan Wang on 08 February 2022.

The user has requested enhancement of the downloaded file.

Chin. Phys. B Vol. 30, No. 12 (2021) 128402

TOPICAL REVIEW — Interdisciplinary physics: Complex network dynamics and emerging technologies

A review on the design of ternary logic circuits*

Xiao-Yuan Wang(王晓媛)†, Chuan-Tao Dong(董传涛), Zhi-Ru Wu(吴志茹), and Zhi-Qun Cheng(程知群)

School of Electronics and Information, Hangzhou Dianzi University, Hangzhou 310018, *China*

(Received 15 July 2021; revised manuscript received 2 September 2021; accepted manuscript online 8 September 2021)

A multi-valued logic system is a promising alternative to traditional binary logic because it can reduce the complexity, power consumption, and area of circuit implementation. This article briefly summarizes the development of ternary logic and its advantages in digital logic circuits. The schemes, characteristics, and application of ternary logic circuits based on CMOS, CNTFET, memristor, and other devices and processes are reviewed in this paper, providing some reference for the further research and development of ternary logic circuits.

Keywords: ternary logic circuit, memristor, digital logic circuit, circuit design

PACS: 84.30.−r, 85.25.Hv, 02.10.Ab **DOI:** 10.1088/1674-1056/ac248b

1. Introduction

With the rapid development of modern information technology and improved integration of digital systems, the limit of interconnection has become prominent in realizing binary logic in nano-scale circuit design. The interconnection lines used in integrated circuit design increase the delay, noise, and power consumption of the system, so circuit interconnection has become one of the essential indicators to judge the performance of integrated circuit systems.[1]

There are only two logic states of '0' and '1' in traditional binary logic. Multi-valued logic is extended from binary logic, referring to the logic that the number of the logic values is greater than 2. For a multi-value system, when the base value is e, the complexity and cost of the whole system are the lowest, and 3, as the integer closest to e, becomes the best choice. As a kind of multi-valued logic, ternary logic has higher logic complexity. For example, for N-bit digital logic, the complexity of the ternary digital logic is $3^N/2^N$ times that of the binary logic. Therefore, the ternary digital logic system has more logic functions. In terms of data representation ability, ternary requires about 58.5% fewer bits than binary to represent the same value, which reduces the complexity of data management, especially when dealing with a large number of issues such as data encryption. The interconnection complexity of the system will also be reduced to realize the corresponding logic function because ternary logic has a higher single-line information-carrying capacity, and the digital chip can also be smaller and lower in cost. For the A/D and D/A conversion accuracy of ternary digital logic circuits, the value represented by the ternary logic is larger than the value represented by the binary logic in the case of the same number of bits, so the A/D and D/A conversion accuracy is much higher. In addition, the ternary digital logic system can be backward compatible with the binary logic system, and there are corresponding expansions in function. In this way, multi-valued logic becomes a promising substitute for binary logic to realize high-density information logic system.[2–5]

The research of ternary logic can be roughly divided into three aspects: mathematical theory, ternary logic devices and basic logic circuits, and the applied research on ternary logic. The theoretical study of ternary logic contains various theorems and logical systems, providing the theoretical basis for the latter two pieces of research. We will introduce the basic ternary theoretical knowledge in Section 2. The second part is the critical content of this article. A corresponding summary of the research findings in this field can provide certain guidelines for the further development of the ternary digital system, such as further improving the data density and logic functions of the digital system. The related application of ternary logic began in 1840 when the British inventor Thomas Fowler first proposed a ternary logic system.[6] Then in 1960, the world's first small ternary computer 'SETUN' appeared at Moscow University in the Soviet Union.[7] In 1973, the State University of New York implemented a ternary computer 'TERNEC' through program simulation on a B1700 type microcomputer,[8] using two binary bits to encode each ternary digit to simulate ternary arithmetic operations. In 1984, the Queen's University laboratory in Canada developed the CMOS ternary computer QTC-1.[9] However, due to the lack of support for ternary logic devices in the semiconductor industry, ternary computers have not been widely developed and further applied.[10]

In recent years, the continuous emergence of various elec-

*Project supported in part by the National Natural Science Foundation of China (Grant No. 61871429), the Natural Science Foundation of Zhejiang Province, China (Grant No. LY18F010012), and the Project of Ministry of Science and Technology of China (Grant No. D20011).

†Corresponding author. E-mail: youyuan-0213@163.com

© 2021 Chinese Physical Society and IOP Publishing Ltd

tronic devices has provided new options to realize ternary circuits, such as MOSFETs, carbon nanotube field effect tubes (CNTFETs), memristors, etc.[11–13] In particular, the successful development of memristor has provided more possibilities for the design of ternary logic circuits. The characteristics of non-volatility, nanometer size and compatibility with CMOS technology of memristor have great potential in ternary logic circuits design. Compared with circuits designed using transistors, the circuit structure is simpler and more conducive to integration. Therefore, summarizing the relevant research results of the ternary logic circuit design at this time can provide a reference for the subsequent theoretical and application research of multi-valued logic.

The rest of this paper is composed as follows: Section 2 briefly introduces the three numerical representation methods of ternary logic, and Section 3 shows several mainstream process methods for constructing ternary basic logic gates in detail, several general design methods of ternary combinational logic application circuits are described in Section 4, Section 5 summarizes the ternary sequential logic circuits, and finally, Section 6 concluded this article.

2. Ternary numeric representation

As we all know, binary logic only uses '0' and '1' to represent logical states, and has been widely used, so why do we need to study ternary digital logic? One important reason is that ternary digital logic is another means and effective method to solve some practical problems. For example, in the field of digital control, ternary logic can indicate the 'on', 'off' and 'idle' of an equipment.

The representation methods of ternary logic consist of two categories: unbalanced and balanced. Among them, the unbalanced include positive ternary $\{0,1,2\}$ and negative ternary $\{0,-1,-2\}$, which are relative in the direction of the logical sign. The balanced ternary is represented by $\{-1,0,1\}$.[14] In this article, we will focus on the design of unbalanced ternary logic circuits.

2.1. Unbalanced ternary

Due to the relativity of the positive ternary and negative ternary logic states, the two are similar in terms of technical solutions, and the difference lies in the carry direction. Based on the fact that the research of negative logic circuits is rare in asymmetric ternary logic, only the relevant numerical representations of positive ternary logic are described here on account of practical application.

The basic operations of positive three-valued logic can be defined as[15]

$$X_i + X_j = \max\{X_i, X_j\},$$
$$X_i \cdot X_j = \min\{X_i, X_j\},$$
$$\bar{X}_i = 2 - X_i, \tag{1}$$

where X_i, $X_j = \{0,1,2\}$, '+' and '·' respectively represent the 'OR' operation and 'AND' operation of positive ternary logic, and the third formula is 'NOT' operation. It is worth noting that the 'NOT' operation (inverter) of ternary logic has three forms, and the mathematical expressions are respectively

$$\begin{aligned} y_0 &= C_0(x) = \begin{cases} 2, & x = 0, \\ 0, & x \neq 0, \end{cases} \\ y_1 &= C_1(x) = \bar{x} = 2 - x, \\ y_2 &= C_2(x) = \begin{cases} 2, & x \neq 2, \\ 0, & x = 2, \end{cases} \end{aligned} \tag{2}$$

where x is the input, y_0, y_1, and y_2 are the outputs of the three inverters, corresponding to NTI (negative ternary inverter), STI (standard ternary inverter), and PTI (positive ternary inverter), respectively.

2.2. Balanced ternary

In fact, a k-bit balanced ternary integer $x = (x_{k-1}x_{k-2}\ldots x_1x_0)_3$ represents the value $\sum_{0\le i\le k-1} x_i 3^i$, where $x_i \in \{-1,0,1\}$. Due to the symmetry of the balanced ternary symbol, the range of numbers that the k-bit balanced ternary integer represents is also symmetric, from $-(3^k-1)/2$ to $(3^k-1)/2$. As a result, the advantage of balanced ternary to represent the entire integer range without the sign bit is significant. In addition, for any integer represented by the balanced ternary, the opposite of the integer number can be obtained by replacing '-1' of each bit of the integer with '1' and '1' with '-1'.[16]

In addition, the balanced ternary multiplication operation does not generate a carry. Under the condition that all the nine kinds of addition operation input, only two types have a carry generation,[10] as shown in Fig. 1. Therefore, balanced ternary logic has certain advantages over unbalanced types in arithmetic operations.

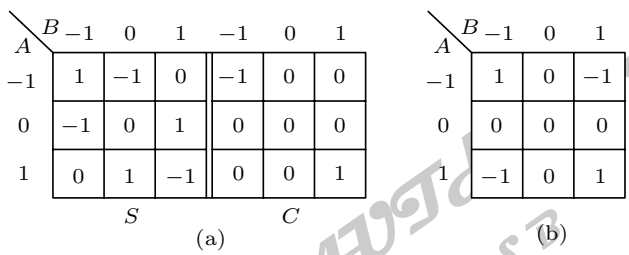

Fig. 1. Karnaugh map of balanced ternary (a) half adder and (b) multiplier.

3. General technical solution for the design of ternary logic gates

In binary logic, AND, OR, and NOT can form a complete set of operations. Ternary logic can first construct a series of basic logic gates, and then combinational logic circuits designed can achieve more complex functions. Of course,

JUST FOR AUTHORS
Chinese Physics B

some unique methods can also directly design ternary application type combinational logic circuits without using basic logic gates.[17,18]

According to the ternary numerical representation discussed in Section 2, the truth tables of positive ternary AND gate and OR gate can be obtained as shown in Table 1. Similarly, Table 2 shows the truth tables of the three inverters. This section will give a detailed description of several typical processes for the design of ternary logic basic gates, including MOSFET, CNTFET, memristive hybrid (voltage value as a logic variable), and memristor (resistance value state as a logic variable). Furthermore, the ternary basic gates designed by other technologies are also summarized.

Table 1. Truth table of TAND and TOR.

A	B	TAND	TOR
0	0	0	0
0	1	0	1
0	2	0	2
1	0	0	1
1	1	1	1
1	2	1	2
2	0	0	2
2	1	1	2
2	2	2	2

Table 2. Truth table of ternary inverter.

A	STI	PTI	NTI
0	2	2	2
1	1	2	0
2	0	0	0

3.1. Design of ternary logic gates based on MOSFETs

In the early MOSFETs-based ternary basic gates design, the complementary structure of P-channel and N-channel transistors was used in a symmetrical way to obtain three different logic levels.[19,20] At the same time, the power supply was much higher than the threshold voltage of the transistor, leading to high circuit complexity and power consumption. In response to this problem, in 1980, reference [21] proposed a novel design method as shown in Figs. 2–4. The PTI, NTI, positive and negative TNAND, TNOR adopted by the asymmetrical structure greatly reduced the complexity and cost of the circuit.

The necessary usage of resistors for ternary circuits mentioned above can generate a certain amount of static power consumption. For this reason, references [22,23] have successively proposed two ternary basic logic gate design schemes that do not require resistors and only use four types of MOS transistors, thereby reducing the static power consumption of the circuit and reducing the number of components used. It also reduces the propagation delay at the same time. In Ref. [22], STI only requires four transistors, NTI and PTI require two transistors. The structures of NTI and PTI are the same. The difference is the threshold voltage of the MOS transistors. Combining the TNOR and TNAND gates designed in the article, a complete set of ternary logic circuit families is constructed, and the design of decoders and shift registers is further realized. Compared with Ref. [22], the circuits designed in Ref. [23] are more complicated, but the paper gives a ternary full adder design based on the improved logic gates.

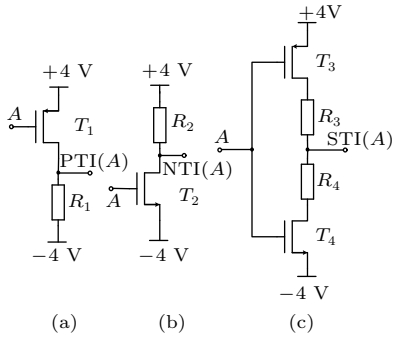

Fig. 2. (a) PTI, (b) NTI and (c) STI in Ref. [21].

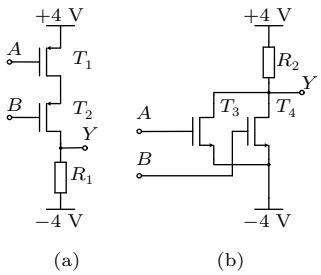

Fig. 3. (a) PTNOR and (b) NTNOR in Ref. [21].

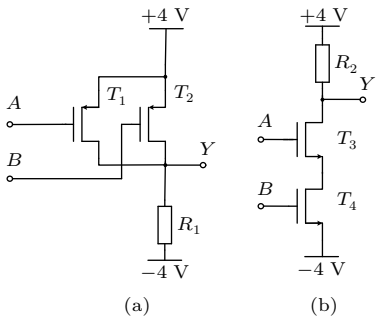

Fig. 4. (a) PTNAND and (b) NTNAND in Ref. [21].

To get the complexity and power consumption of the ternary basic gates designed based on MOSFET further reduced, reference [24] proposed a design method that only a single power supply exists, which not only reduced the overall power consumption of the circuit but also improved the transition time. Reference [25] mentioned a novel STI design, the main idea of which bases on weighting method. The output values of the PTI and NTI gates are added through two capacitors to improve the circuit performance, and there are no additional resistors in the circuit. The static power consumption got eliminated. Srivastava proposed a back-gate bias method to control the threshold voltage of the MOSFETs in

JUST ACCEPTED MANUSCRIPT

Ref. [26], and then ternary basic gates were designed based on this. In 2015, Chowdhury *et al.*[27] designed a multi-value MAX gate based on the CMOS process and a TNOR gate with this MAX operation. Compared with TNOR designed by traditional methods, this design has the advantages of low power consumption and low delay. In addition, researches on dynamic ternary logic circuits[28–30] with significant operational advantage in VLSI are also being carried out successively. In recent years, with the continuous development of semiconductor materials, researchers have adopted different technical solutions to design a standard ternary inverter based on the traditional CMOS binary inverter structure, which realizes the three-state operation.[31–36]

3.2. Design of ternary logic gates based on CNTFETs

With the further development of modern VLSI technology, CMOS technology is facing many grave challenges. Problems such as high leakage current, high power density, and high interconnection impedance limit the further reduction of CMOS device size.[37] Compared with the traditional CMOS circuit, the CNTFET circuit has a higher switching current, better sub-threshold characteristics and stability, higher carrier mobility, higher transconductance, and lower power consumption. Therefore, it opens up a new idea for the design of integrated circuits.[38] In addition, the quasi-one-dimensional structure of CNTFET can better realize the electrostatic control of the channel, and can easily control the threshold voltage of the transistor, making it a significant advantage in the design of multi-value circuits.[39–41]

In 2005, reference [42] first designed an STI logic gate based on CNTFET. As shown in Fig. 5, the circuit uses two CNTFETs with different threshold voltages and two resistors. Although it has a simple structure and a low number of components required, the use of resistors is not conducive to integration with higher power consumption. In 2011, reference [5] proposed a pure CNTFETs based ternary basic gates design, to achieve the purpose of reducing circuit power consumption.

Furthermore, references [43,44] respectively proposed a novel STI with no need for resistors, and reduced two transistors compared to the design scheme in Ref. [5]. Nevertheless, two supply voltages are required. Reference [45] designed a new CNTFET-based complementary ternary basic gate circuit scheme, including STI, PTI, NTI, STB (standard ternary buffer), TNAND, and TNOR, and in contrast with the previous design, it has the better driving capability and greater noise tolerance. In 2014, reference [46] proposed a non-complementary circuit structure based on pseudo N-type CNTFET. Compared with the complementary design, the circuit area is reduced by about 40% in the case of similar propagation delays with an increased power consumption of the circuit.

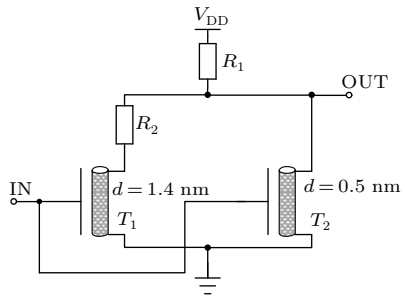

Fig. 5. STI in Ref. [42].

In 2020, reference [47] proposed an ultra-compact ternary logic gate design method using the electrical properties of CNTFET and the negative capacitance feature of ferroelectric materials. The negative capacitance (NC)-CNTFET mentioned in the article has the negative differential resistance (NDR) effect and can create an additional non-gain region among the voltage transfer characteristics of the traditional binary logic gate structure. Therefore, the circuit structure of the binary logic gate can achieve tri-state operation. Sharma *et al.*[48] designed basic gates with low power and high efficiencies by CNTFET, such as STI, STB, TNAND, and TNOR, the basis of which is differential cascade voltage switch (DCVS). This design has certain advantages in terms of power consumption and the number of transistors. In Ref. [49], a novel universal ternary arithmetic unit circuit was mentioned, with 3^9 operable ternary logic functions with two inputs. Compared with the CNTFET circuits with resistive load, this unit has lower power consumption and delay. Reference [50] studied the application of CNTFET in dynamic ternary circuits, the proposed circuit can be used as an inverter and as a buffer. In addition, the researchers have also made many other different designs of CNTFET-based ternary basic logic gates structure and compared the number of transistors, power consumption, switching time, and other performance of the ternary logic gates, and the results show a certain degree of improvement.[51–54]

3.3. Design of ternary logic gates based on memristor

Memristor, as the fourth type of basic circuit component, was first proposed by Chua in 1971.[55] In 2008, HP memristor was successfully fabricated,[56] relying on its nano-scale, non-volatile properties, and compatibility with CMOS processes, making it widely used in neuromorphic networks, digital logic operations, non-volatile memory, and other fields.[57–62]

Memristor has two resistance values, R_{ON} and R_{OFF}. By applying appropriate external voltage or current, the memristor can switch between the two resistance values. For example, when the current flows through the memristor in the forward direction, its resistance gradually decreases to R_{ON}, and when the current flows through the memristor in the reverse direction, its resistance gradually increases to R_{OFF}, as shown in

JUST FOR AUTHORS — CHINESE PHYSICS B

Fig. 6. This feature can lead to the application in logic operations without additional hardware. At present, there are mainly two different implementation schemes for using memristor to perform ternary logic operations: one uses voltage as a logic variable, and combines the memristor with other technologies (such as CMOS, CNTFET, etc.) to design ternary basic logic gates, the memristor is only a calculation element; another is using the three stable resistance states of the tri-valued memristor as logic variables, and the ternary operation results realized by this method can be saved in the memristor. The logic state will not lose even after power off. The circuit designed by the first method runs faster and is compatible with CMOS technology. The logic gate can generate output in the form of voltage within one clock cycle. However, compared with the second method, the circuit structure is relatively complicated. The second method makes full use of the resistance switching characteristics of the memristor, reduces the complexity of the logic circuit structure, and can realize the storage and operation of the logic, which is helpful for the realization of the new computer architecture. However, the control process of this method is relatively cumbersome and requires high accuracy.

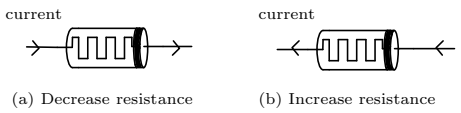

Fig. 6. Resistance switching principle of current controlled memristor.

3.3.1. Taking the voltage value as logic variable

In 2020, reference [63] used Knowm memristor to construct unbalanced ternary logic gates, used MRL[57] design method to build TAND gate and TOR gate as shown in Fig. 7, and used CMOS-memristor hybrid circuit to build three ternary inverters as shown in Fig. 8. NTI and PTI have the same structure, but the threshold voltages of T_3 are different. Further, through expanding the TAND and TOR gates, multi-input minimum value gate and maximum value gate can be obtained. For example, the three-input minimum value gate and maximum value gate are shown in Fig. 9. Reference [64] mentioned a method of combining spintronic memristor and CMOS technology to design unbalanced ternary logic gates. The input of this method is the voltage value, and the output logic value can store as the resistance of the memristor first, and then by reading the resistance of the memristor, the voltage of the corresponding logic is obtained, and logic operation and storage are combined.

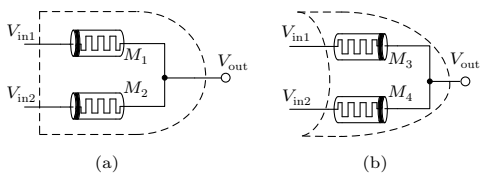

Fig. 7. (a) TAND and (b) TOR in Ref. [63].

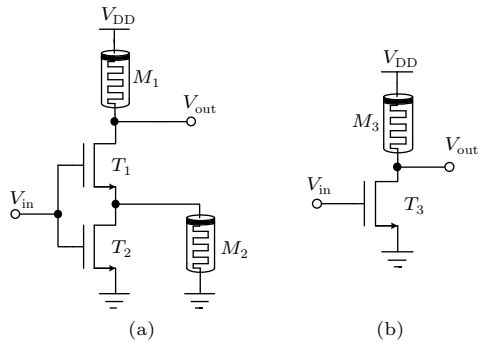

Fig. 8. (a) STI, (b) PTI, NTI in Ref. [63].

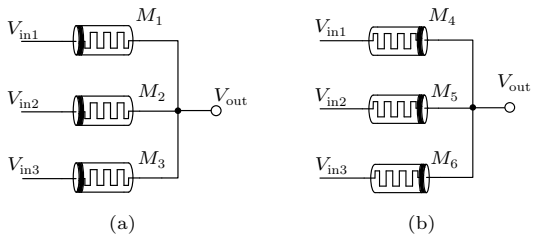

Fig. 9. Three-input (a) TMIN and (b) TMAX in Ref. [63].

Reference [65] proposed memristor-CNTFET hybrid circuit-based ternary basic logic gates, realized TNAND and TNOR by cascading an STI after TAND and TOR, and then designed some arithmetic circuits. Compared with the circuit that only uses CNTFET, the circuit delay and circuit complexity are lower. In Ref. [66], Mohammed *et al.* proposed an STI by using memristor and CNTFET. After introducing the memristor into the circuit design, the circuit area and power consumption have been reduced, and the stability has been improved.

3.3.2. Taking the voltage value as logic variable

Reference [67] proposed a ternary logic gates design method using the resistance of a tri-value memristor as the logic variable. The memristor has three stable resistance states R_{ON} (50 Ω), R_{MED} (400 Ω), R_{OFF} (1000 Ω), which correspond to the logic '2', '1', and '0' of the unbalanced ternary logic. The switching of the resistance state is realized by controlling the width and amplitude of the current pulse flowing through the memristor. Both TAND and TOR circuits are composed of three memristors, two of which are used as input memristors and the other is used as output memristor. The initial states of the input memristors are inputs of the logic gate, and the resistance state of the output memristor is the output after the operation. Under different input conditions, the resistance value of the output memristor will be converted accordingly. In addition, the inverter and COPY circuit are designed. Among them, three types of inverters can be realized by the same NOT circuit structure. The difference lies in the threshold value of the threshold switch used. The COPY circuit can replicate the resistance state of the input memristor.

In 2021, reference [68] proposed a voltage-controlled tri-value memristor model, and then further designed ternary

JUST FOR AUTHORS
—CHINESE PHYSICS B

AND, OR, and NOT gate circuits based on it. The memristor model also has three stable resistance states R_H (10 kΩ), R_M (1 kΩ), and R_L (100 Ω), corresponding to logic '0', '1', and '2', respectively. The ternary AND, OR, and NOT gate circuits are shown in Figs. 10–12. The ternary AND gate and the OR gate contain three tri-value memristors, two as input memristors and the other as output memristor. The ternary NOT gate is composed of two memristors and an auxiliary resistor. The three ternary inverters are all realized by the same NOT circuit structure, but the value of the auxiliary resistor R and the control voltage V_{OP} are different. In each different input combination, the voltage at both ends of the output memristor is different, so its resistance will switch accordingly.

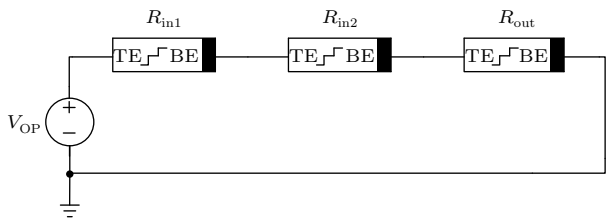

Fig. 10. TAND in Ref. [68].

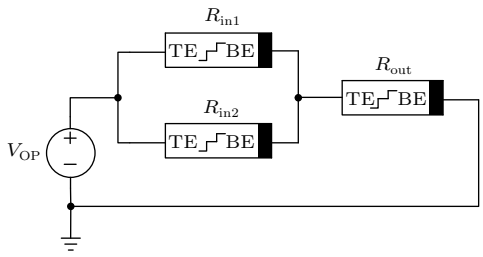

Fig. 11. TOR in Ref. [68].

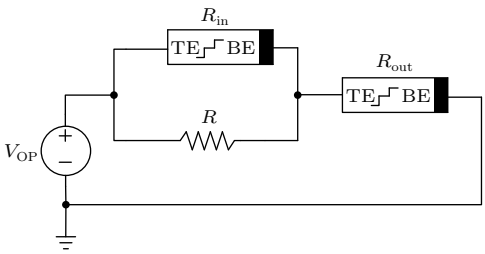

Fig. 12. NOT in Ref. [68].

3.4. Design of ternary logic gates based on other technical solutions

In addition to the above-mentioned technical solutions for designing ternary basic logic gates, some other methods have also been able to design ternary gates, such as QDGFET (quantum dot gate field effect transistors), RTD (resonant tunneling diodes), and SET (single electron transistor).[69–71] In 2019, reference [72] produced a ZnO three-state memristor, which can realize 27 kinds of single ternary logic with only one memristor unit, and can further design ternary arithmetic circuits with AND and OR. Similarly, reference [73] proposed an all-optical single-input ternary logic system that can realize all possible 27 single-three-valued logic functions.

With the continuous progress of the semiconductor material industry, more and more semiconductor devices have shown great potential for application in ternary logic circuits.[74] In Ref. [75], a complementary inverter structure based on P-type black phosphorous and N-type molybdenum disulfide transistors was mentioned, which can work in both binary and ternary states. In addition, the application of GNRFET (graphene nanoribbon field effect transistor) in ternary logic has also attracted much attention. GNRFET has higher tensile strength and better durability than CNTFET.[76] In Refs. [77–81], the basic ternary logic gates designed based on GNRFET were studied. Compared with the circuits designed based on CMOS and CNTFET technology, it has significant improvement in power consumption, circuit area, and power delay product (PDP).

4. Several general methods for the design of ternary combinational logic circuits

The ternary basic logic gates introduced in Section 3 are the basic units that constitute ternary combinational digital logic circuits, which can realize decoder, encoder, adder, multiplier, etc. The general methods of ternary combinational logic circuits are summarized below.

4.1. Decoder-encoder method

The process of designing ternary combinational logic circuits is mainly divided into three steps. First, decode the ternary input into the binary form, then use the binary to perform the corresponding operation, and finally, convert the binary to the ternary output. Figure 13 shows the block diagram of this process. In most of the existing designs, the final encoder part is composed of a level shift circuit and a ternary OR gate, rather than an encoder circuit in the traditional sense. In this section, we will first introduce the design of the decoder and encoder, and then give a brief introduction to the ternary combinational logic circuits based on the decoder-encoder method.

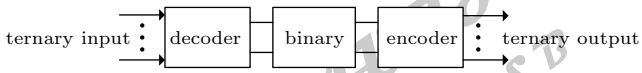

Fig. 13. Block diagram of decoder-encoder method.

4.1.1. Design of ternary decoder and encoder

The function of the decoder is to convert a ternary signal into a binary signal. As shown in Table 3, it is the truth table of a general ternary decoder. In Refs. [5,63,82], a decoder with the general logic structure was implemented based on the designed basic logic gates, as shown in Fig. 14. In Ref. [51], a

JUST FOR AUTHORS
Chinese Physics B

novel decoder structure was proposed, compared with the general design scheme in Fig. 14, the number of components used has notably reduced. In 2020, reference [67] designed a novel decoder structure based on ternary basic logic gates. Contrary to the truth table in Table 3, this circuit uses logic '0' as the effective level to output. Reference [83] proposed a 1–3 line decoder and a 2–9 line decoder based on ternary memristor-CMOS logic gates, and synthesized on FPGA development board.

The encoder can convert the intermediate binary signal into the final ternary output. Reference [84] proposed a ternary encoder based on CNTFET, the circuit is optimized at the transistor level, and the simulation results show that it performs well in terms of delay, power consumption, and the number of transistors. In 2016, reference [85] proposed and designed a 9–2 ternary reversible encoder and a 9–2 ternary reversible priority encoder, and it plays a role in the conversion of a binary circuit and a ternary circuit. In 2018, Vudadha *et al.*[86] proposed an improved encoder based on CNTFET, and applied it to the design of ternary combinational logic circuits. The simulation results show that the power consumption, propagation delay, and power delay product of the ternary full adder designed based on the proposed encoder have been significantly improved. In addition, reference [63] mentioned a ternary encoder based on memristor and CMOS, which can convert three binary signals into one ternary signal.

Table 3. Truth table of ternary decoder.

Y	Y_0	Y_1	Y_2
0	2	0	0
1	0	2	0
2	0	0	2

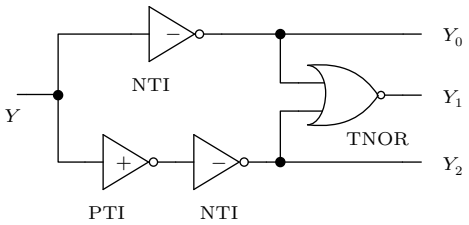

Fig. 14. General ternary decoder structure.

4.1.2. Ternary combinational logic circuits based on decoder-encoder method

In 2020, reference [87] proposed a half adder based on memristor and CNTFET using the decoder-encoder method, as shown in Fig. 15, and then three different full adders have been designed, including CRA (carry-ripple adder), CLA (carry-lookahead adder), and CSA (carry-skip adder). Reference [88] also used this method to design a one-bit ternary comparator, which can be further expanded into an N-bit comparator. References [89–91] also designed a variety of ternary combinational logic circuits with different functions using this method.

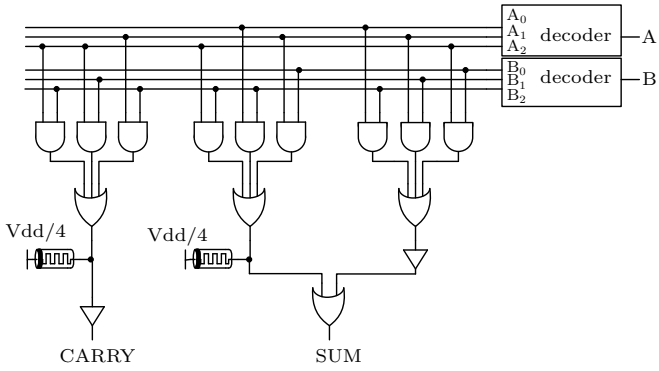

Fig. 15. Half adder designed by decoder-encoder method in Ref. [87].

4.2. Multiplexer-based method

In a ternary logic system, the multiplexer (MUX) can select a signal from multiple ternary digital input signals and output it. Table 4 shows the truth table of the 3:1 MUX, S is the selection signal, I_0, I_1, and I_2 are three input signals.

Table 4. Truth table of 3:1 MUX.

S	OUT
0	I_0
1	I_1
2	I_2

When it comes to the design of ternary combinational logic circuits based on multiplexers, some of the input signals can be used as the MUX selection signal, and the remaining input signals or their unary functions can be used as the inputs of the MUX. Among them, MUX can be designed with a variety of technologies, and the corresponding ternary logic function can be realized through the combination of multiple MUXs and ternary single-variable logic circuits. The advantage of this method is that the circuit can be designed without ternary basic logic gates 'AND', 'OR', 'NOT', etc., but only uses the combination of ternary unary operators and multiplexers for implementation, which can reduce the power consumption of the circuit and the number of components.

In Ref. [92], Jaber *et al.* designed a novel MUX based on CNTFET, and then proposed a half adder with 90 transistors only using the MUXs, as shown in Fig. 16. In the same year, the author used this method to design a ternary multiplier in Ref. [93]. The simulation results show that the proposed multiplier reduces power consumption and improves noise tolerance. Reference [94] used two-stage multiplexers to design a full adder unit. In the first stage, the carry input C_{in} from the lower bit behaves as selection signals of the three 2:1 MUXs, and the unary functions of one input A are used as the inputs of the first stage; 3:1 MUX from the second stage uses another input B as the selection signal, and the inputs are the outputs of the three 2:1 MUXs in the first stage. Reference [95] mentioned a method of using two 2:1 MUX to form a 3:1 MUX, and only used 2:1 MUX to design a ternary half adder. In

JUST FOR AUTHORS

addition, references [96–99] also used this method to design ternary functional combinational logic circuits.

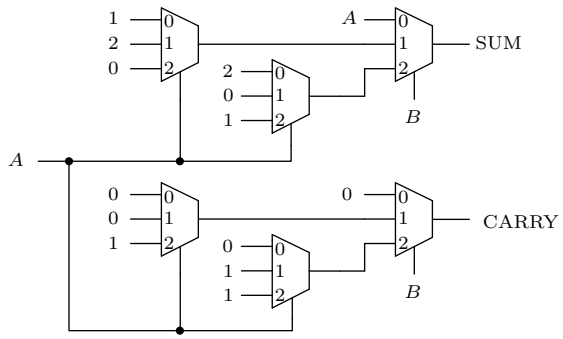

Fig. 16. Half adder designed only using MUXs in Ref. [92].

4.3. Transistor level method

The design idea of this method is to use the logic level of the input signal or the unary functions of the input signal to directly control the conduction of the transistors, in other words, under each group of input, there will be a corresponding path connected to the output terminal to get the required logic level at the output.

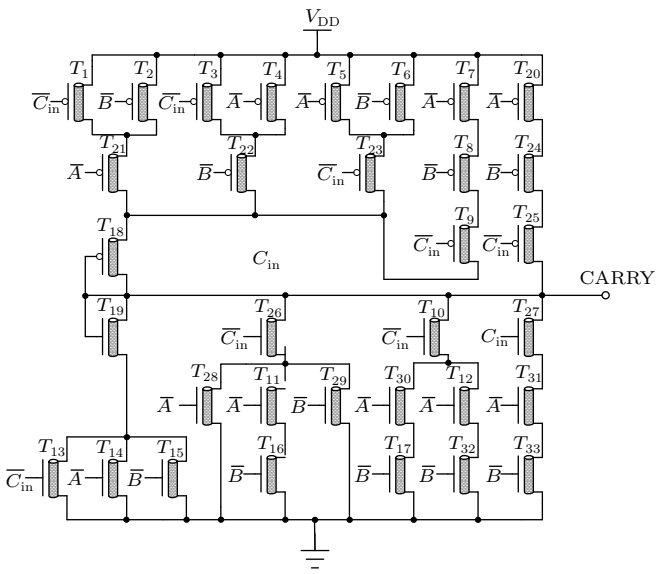

Fig. 17. Ternary full adder carry circuit using transistor level method in Ref. [100].

For example, in Ref. [100], a ternary full adder carry circuit was designed based on CNTFETs, which is to directly control the conduction of CNTFETs through the unary function of input A, B, and C_{in}. For each group of inputs, there will be a path that appears in the circuit, so as to transfer the corresponding logic level to the output. Figure 17 shows the structure of the carry circuit, where the diameter of T_1–T_{17} is d =1.487nm, the diameter of T_{18} and T_{19} is d = 1.108 nm, and the diameter of T_{20}–T_{33} is d = 0.783 nm, different transistor diameters correspond to different threshold voltages. This method does not require the use of basic logic gate circuits either, and the proposed circuit has a lower critical delay, a lower PDP, and a higher operating frequency, the number of transistors used is also greatly reduced. However, the design of a ternary logic circuit with this method will not progress from basic to complex. Each input situation needs to be taken into consideration separately, so the design idea is relatively complicated. Reference [101] designed a ternary comparator through this method, and the power consumption and propagation delay were greatly reduced compared with the previous design. Transistor-level methods can greatly reduce the number of transistors used and have been concerned and used by many researchers.[102–110]

4.4. Other methods

In Ref. [111], a method of using transmission gates was described, that is, the input signal or unary functions of the input are used as the control signal of the transmission gates. Under each group of inputs, there will be a correct path connected to the output, similar to the transistor level method without a decoder. References [112,113] both used a method of capacitance threshold logic, that is, to sum the input by the analog ratio based on capacitance, controlled by the threshold detection circuit, instead of the traditional decoder function. Reference [18] proposed a ternary full adder unit designed with a dynamic ternary logic style.

5. Ternary sequential logic circuits

The output of a ternary combinational logic circuit only depends on the current external input, so the relationship between output and input can reflect the function of the circuit. Several design methods mentioned in Section 4 can realize it with the corresponding functional relationship. However, the output of the sequential circuit is not only related to the current external input but also the previous output. That makes the storage element ternary flip-flop become the first step on the ternary sequential logic circuits implementation. Compared with binary flip-flops, ternary flip-flops have more complex logic functions. In addition, ternary flip-flops not only can be driven by a binary clock, but also can be driven by a ternary clock. When designing a ternary flip-flop, you cannot just replace the logic gates required by a binary flip-flop with the ternary logic gates. This may lead to incomplete functions. Therefore, the circuit structure of the ternary flip-flop may be slightly more complex than that of the binary flip-flop. This section first summarizes the related design of the ternary flip-flops and then introduces two commonly used sequential circuits registers and counters.

JUST FOR AUTHORS

5.1. Ternary FFs

Similar to binary flip-flops, ternary flip-flops can also be divided into many types, such as D flip-flop, T flip-flop, and JK flip-flop.[114] Besides, there are PZN flip-flop, JKL flip-flop, etc.[115,116]

In 1977, reference [115] designed ternary basic logic gates based on MOSFET, and then further designed a ternary D flip-flop, a T flip-flop, and a PZN flip-flop. It is worth noting that the clock signal of the designed flip-flop has only two logic levels, logic '0' and logic '2'. Reference [116] designed a series of ternary basic module circuits, such as 1-of-2 threshold-*t* multiplexing and identity cell, and then designed ternary D flip-flop and JKL flip-flop based on these module circuits. In addition, references [117–119] also proposed different implementations of D flip-flops based on CMOS technology. Among them, the D flip-flop in Ref. [117] uses a latch and a neuron-CMOS literal circuit, reference [118] describes a new CMOS edge-triggered ternary D flip-flop based on double pass-transistor logic (DPL), the D flip-flop mentioned in Ref. [119] has a reset port. Reference [120] describes a ternary D flip-flop based on multiple-junction surface tunnel transistor (MJSTT) and MOSFET. The number of components used in this flip-flop is reduced from 30 (only using MOSFETs) to 3, thus greatly reducing the circuit's area consumption.

In 2010, reference [121] proposed two types of edge-triggered master-slave D flip-flops based on ternary basic logic gates. One is controlled by a binary clock, and the other is controlled by a ternary clock. But there is no specific circuit realization in the article. Instead, the simulation operation was carried out with SIMULINK. In 2016, reference [122] proposed a ternary JK flip-flop based on RTD, which realized the pre-set function. With the literal circuit as the core of the mathematical deduction process, it is much easier to realize the circuit. In the same year, reference [123] proposed two kinds of JKL flip-flops based on CNTFET, one is a single-edge trigger, and the other is a double-edge trigger. In 2017, reference [124] proposed a ternary pulsed D flip-flop with a reset port and a set port. In 2019, Katayoun *et al.*[125] proposed a D flip-flop based on successor and predecessor circuits, which is useful in the design of a ternary counter with lower complexity. Reference [4] mentioned a CNTFET-based quad-edge-triggered ternary flip-flop, which is composed of four types of basic logic blocks: ternary clock driver, standard ternary inverter, binary inverter, and transmission gate. In 2020, Zarin *et al.*[126] designed a ternary D latch based on GNRFET, and then designed a ternary positive edge-triggered master-slave D flip-flop. In 2021, reference [127] employed gate-all-around (GAA)-CNTFET and nonvolatile magnetic tunnel junction (MTJ) to design two types of ternary retention flip-flops: basic ternary retention flip-flop and input aware ternary holding flip-flop. In the proposed input aware ternary retention flip-flop, the power consumption is significantly reduced by adding a magnitude comparator and preventing duplicate data transfer to the MTJs.

5.2. Register

Reference [115] mentioned a two-stage dynamic ternary shift register, where each stage is composed of two STI gates and two ternary switches. In 2002, reference [120] formed a ternary shift register by cascading the ternary D flip-flops that designed. Reference [119] designed a ternary adiabatic D flip-flop with a reset port and a ternary adiabatic multiplexer at first, and then designed a ternary adiabatic shift register, which can realize left shift, right shift, input, and output in parallel of the ternary signal under the control of the clock. In 2021, reference [127] designed a four-trit non-volatile universal ternary shift register based on the proposed non-volatile ternary retention flip-flop. The circuit consists of four ternary retention flip-flops and four 8 to 1 multiplexers, which can realize the functions of input and output in parallel, left shift, right shift, hold, set '0', set '1', set '2', toggle and restore.

5.3. Counter

In 1977, reference [115] cascaded the designed ternary master-slave D flip-flop, and fed back the output Q_n of the last stage D flip-flop to the input terminal D_1 of the first stage to form a ring ternary counter, n is the number of flip-flops. Then, the article also gave a 3-trit ternary counter that can count from 0 to 27 or from -13 to $+13$. This counter consists of three master-slave T flip-flops and two NIT gates. Finally, based on the ternary counter formed by T flip-flops, a divide-by-M ternary counter was proposed with a feedback circuit. Reference [116] designed a modulo-9 up counter based on the designed ternary D flip-flop and ternary basic logic operation circuits. In 2017, Kang *et al.*[124] constructed a four-digit ternary reversible counter based on the designed D flip-flop, up/down circuit, and carry/borrow controlled circuit. After HSPICE simulation analysis, the results show that the proposed circuit attains the average energy saving by 36.4% compared with the ternary counter based on JKL flip-flop, so the low power consumption characteristics of the counter are obviously. In 2019, reference [125] designed a three-trit ternary asynchronous counter and a synchronous counter on the basis of the proposed SP-D flip-flop. The circuit structure diagrams are shown in Figs. 18 and 19, respectively.

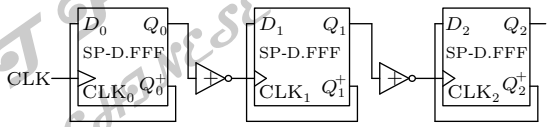

Fig. 18. Three-digit ternary asynchronous counter in Ref. [125].

JUST FOR AUTHORS — CHINESE PHYSICS

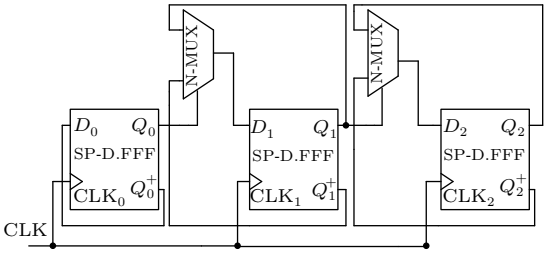

Fig. 19. Three-digit ternary synchronous counter in Ref. [125].

6. Conclusion

With the further development of modern information technology, the integration of devices continues to increase, and problems such as interconnection and excessive power consumption have become more prominent. Ternary logic has a better effect on solving these problems. Furthermore, ternary logic carries more information and can increase the data density of the circuit compared with binary logic. Therefore, it is a promising alternative to the traditional binary logic circuit. It is worthy of further research and discussion by scientific and technological workers. In subsequent research, we can continue to explore the production of new materials and new components for ternary logic circuits, and use these devices to build functional ternary circuits. There are few pieces of researches on balanced ternary circuits at present, and the application of balanced ternary circuits can be further explored to give full play to its unique advantages. In addition, in-depth research can be done on the ternary computer architecture system, hoping that the ternary logic circuits can be widely used as soon as possible.

References

[1] Hamedani S G and Moaiyeri M H 2019 *IEEE T. Device Mat. Re.* **19** 630

[2] Gaudet V 2016 *IEEE Jour. Emer. Select. Top. Circu. Syste.* **6** 5

[3] Kim S, Lee S, Park S, Kim K R and Kang S 2020 *IEEE Trans. Circuits Syst. I-Regul. Pap.* **67** 3138

[4] Kim S, Lee S, Park S and Kang S 2019 *IEEE 49th International Symposium on Multiple-Valued Logic (ISMVL)*, May 21–23, 2019, Linz, Austria, p. 37

[5] Lin S, Kim Y and Lombardi F 2011 *IEEE T. Nanotechnol.* **10** 217

[6] Glusker M 2007 *37th International Symposium on Multiple-Valued Logic (ISMVL'07)*, May 13–16, 2007, Oslo, Norway, p. b

[7] Thomas and Paul A V 1961 *The design philosophy of a small automatic digital computer* (Ann Arbor: ProQuest LLC) pp. 1–132

[8] Frieder G 1973 *IEEE International Symposium on Multiple-Valued Logic (ISMVL)*, 1973, p. 68

[9] Mouftah H T, Heung A N C and Wong L M C 1984 *IEEE International Symposium on Multiple-Valued Logic (ISMVL)*, 1984, p. 125

[10] Toulabinejad M, Taheri M, Navi K and Bagherzadeh N 2019 *Microelectron. J.* **90** 267

[11] Jahangir M Z and Mounika J 2019 *Microelectron. J.* **90** 82

[12] Etiemble D 2020 *IEEE Access* **8** 220015

[13] Khalid M and Singh J 2016 *Analog Integr. Circ. S.* **87** 399

[14] Mondal B, Sarkar P, Saha P K and Chakraborty S 2013 *IEEE 43rd International Symposium on Multiple-Valued Logic*, May 22–24, 2013, Toyama, Japan, p. 334

[15] Kleene S C 1952 *Introduction to metamathematics* (The Netherlands: North-Holland) pp. 332–340

[16] Beckett P 2009 *International Conference on Field-Programmable Technology*, December 9–11, 2009, Sydney, Australia, p. 46

[17] Zarandi A D, Reshadinezhad M R and Rubio A 2020 *IEEE Access* **8** 58585

[18] Murotiya S L, Gupta A and Vasishth S 2014 *Annual IEEE India Conference (INDICON)*, December 11–13, 2014, Pune, India, p. 1

[19] Koanantakool H T 1978 *Electron. Lett.* **14** 462

[20] Huertas J L, Acha J I and Carmona J M 1978 *IEE Journal on Electronic Circuits & Systems* **2** 61

[21] Mouftah H T and Smith K C 1980 *Electronic Circuits & Systems Iee Proceedings G* **127** 165

[22] Balla P C and Antoniou A 1984 *IEEE J. Solid-St. Circ.* **19** 739

[23] Heung A and Mouftah H T 1985 *IEEE J. Solid-St. Circ.* **20** 609

[24] Gaikwad V T and Deshmukh P R 2015 *International Conference on Pervasive Computing (ICPC)*, January 8–10, 2015, Pune, India, p. 1

[25] Doostaregan A, Moaiyeri M H, Navi K and Hashemipour O 2010 *15th CSI International Symposium on Computer Architecture and Digital Systems*, September 23–24, 2010, Tehran, Iran, p. 115

[26] Srivastava A 2000 *Microelectron. Reliab.* **40** 2107

[27] Chowdhury A K, Raj N and Singh A K 2015 *4th International Conference on Eco-friendly Computing and Communication Systems*, December 07–08, 2015, Natl Inst Technol, India, p. 428

[28] Wu C Y and Huang H Y 1990 *IEEE International Symposium on Circuits and Systems*, May 1–3, 1990, New Orleans, USA, p. 582

[29] Hang G Q, Yang Y, Zhang D Y and Li X H 2014 *Tenth International Conference on Computational Intelligence and Security*, November 15–16, 2014, Kunming, China, p. 166

[30] Hang G Q, Zhou X C and Hu X H 2014 *IEEE 12th International Conference on Dependable, Autonomic and Secure Computing*, August 24–27, 2014, Dalian, China, p. 447

[31] Shin S, Jeong J W, Park B G and Kim K R 2015 *IEEE T. Electron Dev.* **62** 2396

[32] Shin S, Jang E and Kim K R 2014 *Silicon Nanoelectronics Workshop (SNW)*, June 8–9, 2014, Honolulu, USA, p. 1

[33] Kim S, Lee K, Lee J H, Kwon D and Park B G 2020 *IEEE T. Electron Dev.* **67** 3889

[34] Shin S, Jeong J W and Kim K R 2016 *IEEE Silicon Nanoelectronics Workshop (SNW)*, June 12–13, 2016, Honolulu, USA, p. 170

[35] Kim H W, Kim S, Lee K, Lee J, Park B G and Kwon D 2020 *IEEE T. Electron Dev.* **67** 4541

[36] Kim H W and Kwon D 2021 *IEEE J. Electron Devices Soc.* **9** 1

[37] Kim Y B 2010 *Trans. Electr. Electron. Mater.* **11** 93

[38] Moaiyeri M H, Mirzaee R F, Doostaregan A, Navi K and Hashemipour O 2013 *IET Comput. Digit. Tech.* **7** 167

[39] Jafarzadehpour F and Keshavarzian P 2016 *IET Circ. Device. Syst.* **10** 365

[40] Srinivasu B and Sridharan K 2017 *IET Circ. Device. Syst.* **11** 352

[41] Shreya S and Chandel R 2014 *Students Conference on Engineering and Systems*, May 28–30, 2014, Allahabad, India, p. 1

[42] Raychowdhury A and Roy K 2005 *IEEE T. Nanotechnol.* **4** 168

[43] Nan Q and Choi K 2010 *International SoC Design Conference*, November 22–23, 2010, Incheon, Korea (South), p. 115

[44] Betschi O and Choi K 2019 *International SoC Design Conference (ISOCC)*, October 6–9, 2019, Jeju, Korea (South), p. 243

[45] Moaiyeri M H, Doostaregan A and Navi K 2011 *IET Circ. Device. Syst.* **5** 285

[46] Liang J H, Chen L B,Han J and Lombardi F 2014 *IEEE T. Nanotechnol.* **13** 695

[47] Joop M K Q, Moaiyeri M H and Tamersit K 2020 *IEEE Trans. Circuits Syst. II-Express Briefs.* **68** 2162

[48] Sharma T and Kumre L 2020 *IET Circ. Device. Syst.* **14** 1077

[49] Keshavarzian P 2013 *Microelectron. J.* **44** 794

[50] Nepal K 2010 *Proceedings of the 8th IEEE International NEWCAS Conference 2010*, June 20–23, 2010, Montreal, Canada, p. 53

[51] Jaber R A, Kassem A, El-Hajj A M, El-Nimri L A and Haidar A M 2019 *IEEE Access* **7** 93871

[52] Samadi H, Shahhoseini A and Aghaei-liavali F 2017 *Microelectron. J.* **63** 41

JUST FOR AUTHORS

[53] Das D, Banerjee A and Prasad V 2018 *International Symposium on Devices, Circuits and Systems (ISDCS)*, March 29–31, 2018, Howrah, India, p. 1

[54] Tabrizchi S, Taheri M, Navi K and Bagherzadeh N 2019 *IET Circ. Device. Syst.* **13** 193

[55] Chua L 1971 *IEEE Trans. Circuit Theory* **18** 507

[56] Strukov D B, Snider G S, Stewart D R and Williams R S 2008 *Nature* **453** 80

[57] Kvatinsky S, Wald N, Satat G, Kolodny A,Weiser U C and Friedman E G 2012 13*th International Workshop on Cellular Nanoscale Networks and their Applications (CNNA)*, August 29–31, 2012, Turin, Italy, p. 1

[58] Maan A K, Jayadevi D A and James A P 2017 *IEEE T. Neur. Net. Lear.* **28** 1734

[59] Wang X P, Yang Y Y and Shang M J 2018 37*th Chinese Control Conference (CCC)*, July 25–27, 2018, Wuhan, China, p. 8502

[60] Govli R, Dixit V and Sahoo D 2018 *IEEE* 61*st International Midwest Symposium on Circuits and Systems (MWSCAS)*, August 5–8, 2018, Windsor, Canada, p. 508

[61] Prabaharan S R S, Sahoo S and Mishra S K 2017 *International Conference on Nextgen Electronic Technologies: Silicon to Software (ICNETS2)*, March 23–25, 2017, Chennai, India, p. 456

[62] An H Y, Al-Mamum M S, Orlowski M K, Liu L J and Yi Y 2021 *IEEE T. Comput. Aid. D.* **PP** 1

[63] Wang X Y, Zhou P F, Eshraghian J K, Lin C Y, Iu H H C, Chang T C and Kang S M 2021 *IEEE Trans. Circuits Syst. I-Regul. Pap.* **68** 264

[64] Zhang H F, Zhang Z W, Gao M Y, Luo L, Duan S K, Dong Z K and Lin H P 2020 *Electronics* **9** 542

[65] Soliman N S, Fouda M E and Radwan A G 2018 *Microelectron. J.* **72** 74

[66] Mohammed M U, Vijjapuram R and Chowdhury M H 2018 *IEEE* 61*st International Midwest Symposium on Circuits and Systems (MWSCAS)*, August 5–8, 2018, Windsor, Canada, p. 1106

[67] Luo L, Dong Z K, Hu X F, Wang L D and Duan S K 2020 *Int. J. Bifurcat. Chaos* **30** 2050222

[68] Wang X Y, Li P, Jin C X, Dong Z K and Iu H H C 2021 *Int. J. Bifurcat. Chaos* **31** 2150248

[69] Karmakar S, Chandy J A and Jain F C 2013 *IEEE T. VLSI Syst.* **21** 793

[70] Nuniez J, Quintana J M and Avedillo M J 2007 *2nd IEEE International Conference on Nano/Micro Engineered and Molecular Systems*, January 16–19, 2007, Bangkok, Thailand, p. 860

[71] Wu G, Cai L and Li Q 2009 *Journal of Semiconductors* **30** 96

[72] Zhang Y J, Chen X H, Wang Z R, Chen Q L, Liu G, Li Y, Wang P J, Li R W and Miao X S 2019 *IEEE T. Electron Dev.* **66** 4710

[73] Taraphdar C, Chattopadhyay T and Roy J N 2011 *Optik* **122** 33

[74] Gopal P V, Narkhede S and Sasikala G 2015 *International Conference on Smart Technologies and Management for Computing, Communication, Controls, Energy and Materials (ICSTM)*, May 6–8, 2015, Chennai, India, p. 275

[75] Tian M C, Xiong X, Huang M Q, Li T Y, Li S M, Hu QL, Li X F and Wu Y Q 2018 14*th IEEE International Conference on Solid-State and Integrated Circuit Technology (ICSICT)*, October 31–November 3, 2018, Qingdao, China, p. 1

[76] Dey A, Bajpai O P, Sikder A K, Chattopadhyay S and Khan M A S 2015 *Renew. Sust. Energ. Rev.* **53** 653

[77] Gowrisankar P A 2017 *Third International Conference on Science Technology Engineering & Management (ICONSTEM)*, March 23–24, 2017, Chennai, India, p. 1023

[78] Sandhie Z T, Ahmed F U and Chowdhury M H 2020 *IEEE 11th Latin American Symposium on Circuits & Systems (LASCAS)*, February 25–28, 2020, San Jose, Costa Rica, p. 1

[79] Sandhie Z T, Ahmed F U and Chowdhury M H 2020 *IEEE Open Journal of Nanotechnology* **1** 77

[80] Nayeri M, Keshavarzian P and Nayeri M 2019 *Microelectron. J.* **92** 104599

[81] Madhuri B D and Sunithamani S 2020 *IET Circ. Device. Syst.* **14** 972

[82] Zahoor F, Hussin F A, Khanday F A, Ahmad M R, Nawi I M, Ooi C Y and Rokhani F Z 2021 *Electronics* **10** 79

[83] Wang X Y, Wu Z R, Zhou P F, Iu H H C, Eshraghian J K and Kang S M 2021 arXiv: 2104.10297 [cs.ET]

[84] Saidutt P V, Srinivas V, Phaneendra P S and Muthukrishnan N M 2012 *Asia Pacific Conference on Postgraduate Research in Microelectronics and Electronics*, December 5–7, 2012, Hyderabad, India, p. 85

[85] Ghosh K, Haque M M and Chakraborty S 2016 *International Conference on Communication and Signal Processing (ICCSP)*, April 6–8, 2016, Melmaruvathur, India, p. 1290

[86] Vudadha C, Rajagopalan S, Dusi A, Phaneendra P S and Srinivas M B 2018 *IEEE Trans. Nanotechnol.* **17** 299

[87] Mohammaden A, Fouda M E, Said L A and Radwan A G 2020 *IEEE* 63*rd International Midwe st Symposium on Circuits and Systems (MWSCAS)*, August 9–12, 2020, Springfield, USA, p. 562

[88] Soliman N S, Fouda M E, Said L A, Madian A H and Radwan A G 2018 30*th International Conference on Microelectronics (ICM)*, December 16–19, 2018, Sousse, Tunisia, p. 148

[89] Soliman N S, Fouda M E, Said L A, Madian A H and Radwan A G 2019 31*st International Conference on Microelectronics (ICM)*, December 15–18, 2019, Cairo, Egypt, p. 142

[90] Soliman N S, Fouda M E, Alhurbi A G, Said L A, Madian A H and Radwan A G 2019 *IEEE Access* **7** 48371

[91] Vudadha C, Parlapalli S P and Srinivas M B 2018 *Microelectron. J.* **75** 75

[92] Jaber R A, El-Hajj A M, Kassem A, Nimri L A and Haidar A M 2020 *Microelectron. J.* **96** 104698

[93] Jaber R A, Haidar A M and Kassem A 2020 32*nd International Conference on Microelectronics (ICM)*, December 14–17, 2020, Aqaba, Jordan, p. 1

[94] Tabrizchi S, Panahi A, Sharifi F, Navi K and Bagherzadeh N 2017 *IET Circ. Devices Syst.* **11** 465

[95] Vudadha C T and Srinivas M B 2018 *IEEE* 48*th International Symposium on Multiple-Valued Logic (ISMVL)*, May 16–18, 2018, Linz, Austria, p. 192

[96] Vudadha C, Katragadda S and Phaneendra P S 2013 *IEEE Asia Pacific Conference on Postgraduate Research in Microelectronics and Electronics (PrimeAsia)*, December 19–21, 2013, Visakhapatnam, India, p. 46

[97] Sharma T and Kumre L 2020 *Circuits Syst. Signal Process.* **39** 3265

[98] Vudadha C, Sreehari V and Srinivas M B 2012 8*th Conference on Ph.D. Research in Microelectronics & Electronics*, June 12–15, 2012, Aachen, Germany, p. 1

[99] Sharma T and Kumre L 2020 *Microelectron. J.* **104** 104869

[100] Sahoo S K, Akhilesh G and Sahoo R 2017 3*rd IEEE International Symposium on Nanoelectronic and Information Systems* (IEEE INIS), December 18–20, 2017, Bhopal, India, p. 46

[101] Vudadha C, Sai P P, Sreehari V and Srinivas M B 2012 *International Symposium on Communications and Information Technologies* (ISCIT), October 2–5, 2012, p. 942

[102] Vudadha C, Phaneendra P S and Srinivas M B A 2016 *IEEE International Symposium on Nanoelectronic and Information Systems* (iNIS), December 19–21,2016, Gwalior, India, p. 278

[103] Murotiya S L and Gupta A 2014 *Arab. J. Sci. Eng.* **39** 7839

[104] Murotiya S L and Gupta A 2015 28*th International Conference on VLSI Design*, January 3–7, 2015, Bangalore, India, p. 292

[105] Chen K and Hsieh V C 1999 *First IEEE Asia Pacific Conference on ASICs*, August 23–25, 1999, Seoul, Korea, p. 166

[106] Ghoneim M S, Mohammaden A, Hesham R, Madian A H 2020 32*nd International Conference on Microelectronics (ICM)*, December 14–17, 2020, Aqaba, Jordan p. 1

[107] Jaber A R, Owaidat B, Kassem A and HaidarA A M 2020 *International Conference on Innovation and Intelligence for Informatics, Computing and Technologies (3ICT)*, December 20–21, 2020, Sakheer, Bahrain, p. 1

[108] Vidhyadharan S and Dan S S 2021 *IEEE Trans. Nanotechnol.* **20** 365

[109] Firouzi S, Tabrizchi S, Sharifi F and Badawy A 2019 *Comput. Electr. Eng.* **77** 205

[110] Phanindra L S, Rajath M N, Rakesh V and Vasundara P K 2016 *IEEE International Conference on Recent Trends in Electronics, Information & Communication Technology (RTEICT)*, May 20–21, 2016, Bangalore, India, p. 563

[111] Sankar P A G 2018 *International Conference on Intelligent Computing and Communication for Smart World* (I2C2SW), December 14–15, 2018, Erode, India, p. 198

[112] Moaiyeri M H, Mirzaee R F, Navi K and Hashemipour O 2011 *Nano-Micro Lett.* **3** 43

[113] Sharma T and Kumre L 2020 *Microprocess. Microsyst.* **73** 102959

JUST ACCEPTED AUTHORS

[114] Gope J, Bhadra S, Chanda S, Sarkar M, Pal S and Rai A 2016 *IEEE 7th Annual Ubiquitous Computing, Electronics & Mobile Communication Conference (UEMCON)*, October 20–22, 2016, New York, USA, p. 1
[115] Mouftah and Jordan 1977 *IEEE Trans. Comput.* **26** 281
[116] Wu X W and Prosser F 1988 *The Eighteenth International Symposium on Multiple-Valued Logic (ISMVL)*, May 24–26, 1988 Palma de Mallorca, Spain, p. 307
[117] Zhou X C and Hang G Q 2013 *Ninth International Conference on Natural Computation (ICNC)*, July 23–25, 2013, Shenyang, China, p. 272
[118] Hang G Q and Zhou X C 2011 *International Conference on Electric Information and Control Engineering (ICEICE)*, April 15–17, 2011, Wuhan, China, p. 5978
[119] Mei F G and Wang P J 2010 *International Conference on Computer Application and System Modeling (ICCASM)*, October 22–24, 2010, Taiyuan, China, p. 641
[120] Uemura T and Baba T 2001 *IEEE Trans. Electron Devices* **49** 1336
[121] Sipos E and Miron C 2010 *IEEE International Conference on Automation, Quality and Testing, Robotics (AQTR)*, May 28–30, 2010, Cluj-Napoca, Romania, p. 1
[122] Lin M, Zhang H P and Lv W F 2016 *International Conference on Integrated Circuits and Microsystems (ICICM)*, November 23–25, 2016, Chengdu, China, p. 91
[123] Wang Q, Wang P J and Dong D H 2016 *IEEE International Conference on Ubiquitous Wireless Broadband (ICUWB)*, October 16–19, 2016, Nanjing, China, p. 1
[124] Kang Y P, Wang P J, Zhang Y J and Li G 2017 *IEEE 12th International Conference on ASIC (ASICON)*, October 25–28, 2017, Guiyang, China, p. 375
[125] Rahbari K and Hosseini S A 2019 *AEU-Int. J. Electron. Commun.* **109** 107
[126] Sandhie Z T, Ahmed F U and Chowdhury M H 2020 *IEEE 63rd International Midwest Symposium on Circuits and Systems (MWSCAS)*, August 9–12, 2020, Springfield, USA, p. 554
[127] Amirany A, Jafari K and Moaiyeri M H 2021 *IEEE Trans. Very Large Scale Integr. (VLSI) Syst.* **29** 916

JUST FOR AUTHORS
— CHINESE PHYSICS B

Chinese Physics B

Volume 30 Number 12 December 2021

SPECIAL TOPIC — Unconventional superconductivity

127402 Dispersion of neutron spin resonance mode in $Ba_{0.67}K_{0.33}Fe_2As_2$
Tao Xie, Chang Liu, Tom Fennell, Uwe Stuhr, Shi-Liang Li and Hui-Qian Luo

TOPICAL REVIEW — Interdisciplinary physics: Complex network dynamics and emerging technologies

128402 A review on the design of ternary logic circuits
Xiao-Yuan Wang, Chuan-Tao Dong, Zhi-Ru Wu and Zhi-Qun Cheng

SPECIAL TOPIC — Interdisciplinary physics: Complex network dynamics and emerging technologies

120202 Prediction of epidemics dynamics on networks with partial differential equations: A case study for COVID-19 in China
Ru-Qi Li, Yu-Rong Song and Guo-Ping Jiang

120203 Optimal control strategy for COVID-19 concerning both life and economy based on deep reinforcement learning
Wei Deng, Guoyuan Qi and Xinchen Yu

120510 Enhance sensitivity to illumination and synchronization in light-dependent neurons
Ying Xie, Zhao Yao, Xikui Hu and Jun Ma

120511 Embedding any desired number of coexisting attractors in memristive system
Chunbiao Li, Ran Wang, Xu Ma, Yicheng Jiang and Zuohua Liu

120512 Controlling chaos and supressing chimeras in a fractional-order discrete phase-locked loop using impulse control
Karthikeyan Rajagopal, Anitha Karthikeyan and Balamurali Ramakrishnan

120513 Sensitivity to external optical feedback of circular-side hexagonal resonator microcavity laser
Tong Zhao, Zhi-Ru Shen, Wen-Li Xie, Yan-Qiang Guo, An-Bang Wang and Yun-Cai Wang

120514 Cascade discrete memristive maps for enhancing chaos
Fang Yuan, Cheng-Jun Bai and Yu-Xia Li

120515 Transient transition behaviors of fractional-order simplest chaotic circuit with bi-stable locally-active memristor and its ARM-based implementation
Zong-Li Yang, Dong Liang, Da-Wei Ding, Yong-Bing Hu and Hao Li

JUST FOR AUTHORS
— CHINESE PHYSICS B

(*Continued on the Bookbinding Inside Back Cover*)

120516 Modeling and dynamics of double Hindmarsh–Rose neuron with memristor-based magnetic coupling and time delay
Guoyuan Qi and Zimou Wang

120517 Modeling the dynamics of firms' technological impact
Shuqi Xu, Manuel Sebastian Mariani and Linyuan Lü

128702 Continuous non-autonomous memristive Rulkov model with extreme multistability
Quan Xu, Tong Liu, Cheng-Tao Feng, Han Bao, Hua-Gan Wu and Bo-Cheng Bao

RAPID COMMUNICATION

126801 Moiré superlattice modulations in single-unit-cell FeTe films grown on $NbSe_2$ single crystals
Han-Bin Deng, Yuan Li, Zili Feng, Jian-Yu Guan, Xin Yu, Xiong Huang, Rui-Zhe Liu, Chang-Jiang Zhu, Limin Liu, Ying-Kai Sun, Xi-Liang Peng, Shuai-Shuai Li, Xin Du, Zheng Wang, Rui Wu, Jia-Xin Yin, You-Guo Shi and Han-Qing Mao

126802 Extended phase diagram of $La_{1-x}Ca_xMnO_3$ by interfacial engineering
Kexuan Zhang, Lili Qu, Feng Jin, Guanyin Gao, Enda Hua, Zixun Zhang, Lingfei Wang and Wenbin Wu

126804 Molecular beam epitaxy growth of monolayer hexagonal $MnTe_2$ on Si(111) substrate
S Lu, K Peng, P D Wang, A X Chen, W Ren, X W Fang, Y Wu, Z Y Li, H F Li, F Y Cheng, K L Xiong, J Y Yang, J Z Wang, S A Ding, Y P Jiang, L Wang, Q Li, F S Li and L F Chi

127901 Topological Dirac surface states in ternary compounds $GeBi_2Te_4$, $SnBi_2Te_4$ and $Sn_{0.571}Bi_{2.286}Se_4$
Yunlong Li, Chaozhi Huang, Guohua Wang, Jiayuan Hu, Shaofeng Duan, Chenhang Xu, Qi Lu, Qiang Jing, Wentao Zhang and Dong Qian

128501 A double quantum dot defined by top gates in a single crystalline InSb nanosheet
Yuanjie Chen, Shaoyun Huang, Jingwei Mu, Dong Pan, Jianhua Zhao and Hong-Qi Xu

128703 Discontinuous and continuous transitions of collective behaviors in living systems
Xu Li, Tingting Xue, Yu Sun, Jingfang Fan, Hui Li, Maoxin Liu, Zhangang Han, Zengru Di and Xiaosong Chen

GENERAL

120201 Stability analysis of multiple-lattice self-anticipative density integration effect based on lattice hydrodynamic model in V2V environment
Geng Zhang and Da-Dong Tian

120204 A new algorithm for reconstructing the three-dimensional flow field of the oceanic mesoscale eddy
Chao Yan, Jing Feng, Ping-Lv Yang and Si-Xun Huang

JUST FOR AUTHORS
— CHINESE PHYSICS B

120205 Near-optimal control of a stochastic rumor spreading model with Holling II functional response function and imprecise parameters
Liang'an Huo and Xiaomin Chen

120301 Three-party reference frame independent quantum key distribution protocol
Comfort Sekga and Mhlambululi Mafu

120302 Degenerate asymmetric quantum concatenated codes for correcting biased quantum errors
Ji-Hao Fan, Jun Li, Han-Wu Chen and Wen-Jie Liu

120303 Quantum reflection of a Bose–Einstein condensate with a dark soliton from a step potential
Dong-Mei Wang, Jian-Chong Xing, Rong Du, Bo Xiong and Tao Yang

120304 Quantifying coherence with dynamical discord
Lian-Wu Yang and Yun-Jie Xia

120401 Simulation of the gravitational wave frequency distribution of neutron star–black hole mergers
Jianwei Zhang, Chengmin Zhang, Di Li, Xianghan Cui, Wuming Yang, Dehua Wang, Yiyan Yang, Shaolan Bi and Xianfei Zhang

120501 Merging and splitting dynamics between two bright solitons in dipolar Bose–Einstein condensates
Xin Li, Peng Gao, Zhan-Ying Yang and Wen-Li Yang

120502 Heterogeneous dual memristive circuit: Multistability, symmetry, and FPGA implementation
Yi-Zi Cheng, Fu-Hong Min, Zhi Rui and Lei Zhang

120503 Adaptive synchronization of a class of fractional-order complex-valued chaotic neural network with time-delay
Mei Li, Ruo-Xun Zhang and Shi-Ping Yang

120504 Dynamical analysis, circuit realization, and application in pseudorandom number generators of a fractional-order laser chaotic system
Chenguang Ma, Santo Banerjee, Li Xiong, Tianming Liu, Xintong Han and Jun Mou

120505 Explosive synchronization of multi-layer complex networks based on inter-layer star network connection
Yan-Liang Jin, Run-Zhu Guo, Xiao-Qi Yu and Li-Quan Shen

120506 Stabilization strategy of a car-following model with multiple time delays of the drivers
Weilin Ren, Rongjun Cheng and Hongxia Ge

120507 Distributed optimization for discrete-time multiagent systems with nonconvex control input constraints and switching topologies
Xiao-Yu Shen, Shuai Su and Hai-Liang Hou

JUST FOR AUTHORS
— Chinese Physics B

120508 Transition to chaos in lid–driven square cavity flow
Tao Wang and Tiegang Liu

120509 Stability analysis of hydro-turbine governing system based on machine learning
Yuansheng Chen and Fei Tong

120518 Pitman–Yor process mixture model for community structure exploration considering latent interaction patterns
Jing Wang and Kan Li

120601 Multilevel atomic Ramsey interferometry for precise parameter estimations
X N Feng and L F Wei

120701 A terahertz on-chip InP-based power combiner designed using coupled-grounded coplanar waveguide lines
Huali Zhu, Yong Zhang, Kun Qu, Haomiao Wei, Yukun Li, Yuehang Xu and Ruimin Xu

120702 Design of a novel correlative reflection electron microscope for *in-situ* real-time chemical analysis
Tian-Long Li, Zheng Wei and Wei-Shi Wan

120703 A 32-channel 100 GHz wavelength division multiplexer by interleaving two silicon arrayed waveguide gratings
Changjian Xie, Xihua Zou, Fang Zou, Lianshan Yan, Wei Pan and Yong Zhang

ATOMIC AND MOLECULAR PHYSICS

123201 Photoluminescence of green nanophosphors $Sr_2MgSi_2O_7$ doped with Tb^{3+} under 374-nm excitation
Bo-Shi Mu, Yi Zhang, Qing-Feng Bian, Cheng-Ren Li, Zhi-Chao Li, Yun-Ting Chu, Feng Zhao and Jing-Chang Sun

123202 Taking snapshots of a moving electron wave packet in molecules using photoelectron holography in strong-field tunneling ionization
Mingrui He, Yang Fan, Yueming Zhou and Peixiang Lu

123203 Exploration of magnetic field generation of H_3^{2+} by direct ionization and coherent resonant excitation
Zhi-Jie Yang, Qing-Yun Xu, Yong-Lin He, Xue-Shen Liu and Jing Guo

123204 Theoretical calculations of hyperfine splitting, Zeeman shifts, and isotope shifts of $^{27}Al^+$ and logical ions in Al^+ clocks
Xiao-Kang Tang, Xiang Zhang, Yong Shen and Hong-Xin Zou

123301 Line positions, intensities, and Einstein *A* coefficients for 3–0 band of $^{12}C^{16}O$: A spectroscopy learning method
Zhi-Xiang Fan, Zhi-Zhang Ni, Jie-Jie He, Yi-Fan Wang, Qun-Chao Fan, Jia Fu, Yong-Gen Xu, Hui-Dong Li, Jie Ma and Feng Xie

JUST FOR AUTHORS
— CHINESE PHYSICS B

123302 Theoretical verification of intermolecular hydrogen bond induced thermally activated delayed fluorescence in SOBF-OMe
Mu-Zhen Li, Fei-Yan Li, Qun Zhang, Kai Zhang, Yu-Zhi Song, Jian-Zhong Fan, Chuan-Kui Wang and Li-Li Lin

123401 Elastic electron scattering with formamide-$(H_2O)_n$ complexes ($n = 1,\ 2$): Influence of microsolvation on the π^* and σ^* resonances
Kedong Wang, Yan Wang, Jie Liu, Yiwen Wang and Haoxing Zhang

123402 Multiple recollisions in nonsequential double ionization below the recollision-ionization threshold
Xiao-Meng Ma, Ai-Hong Tong, Zhuo Wang and Chun-Yang Zhai

123403 Exact quantum dynamics study of the $H(^2S) + SiH^+(X^1\Sigma^+)$ reaction on a new potential energy surface of $SiH_2^+(X^2A_1)$
Wen-Li Zhao, Rui-Shan Tan, Xue-Cheng Cao, Feng Gao and Qing-Tian Meng

ELECTROMAGNETISM, OPTICS, ACOUSTICS, HEAT TRANSFER, CLASSICAL MECHANICS, AND FLUID DYNAMICS

124201 Enhancing stationary entanglement between two optomechanical oscillators by Coulomb interaction with Kerr medium
Tian-Le Yang, Chen-Long Zhu, Sheng Liu and Ye-Jun Xu

124202 Broad gain, continuous-wave operation of InP-based quantum cascade laser at $\lambda \sim 11.8$ μm
Huan Wang, Jin-Chuan Zhang, Feng-Min Cheng, Zeng-Hui Gu, Ning Zhuo, Shen-Qiang Zhai, Feng-Qi Liu, Jun-Qi Liu, Shu-Man Liu and Zhan-Guo Wang

124203 Brillouin gain spectrum characterization in Ge-doped large-mode-area fibers
Xia-Xia Niu, Yi-Feng Yang, Zhao Quan, Chun-Lei Yu, Qin-Ling Zhou, Hui Shen, Bing He and Jun Zhou

124204 Optical solitons supported by finite waveguide lattices with diffusive nonlocal nonlinearity
Changming Huang, Hanying Deng, Liangwei Dong, Ce Shang, Bo Zhao, Qiangbo Suo and Xiaofang Zhou

124205 Single-mode antiresonant terahertz fiber based on mode coupling between core and cladding
Shuai Sun, Wei Shi, Quan Sheng, Shijie Fu, Zhongbao Yan, Shuai Zhang, Junxiang Zhang, Chaodu Shi, Guizhong Zhang and Jianquan Yao

124206 A 61-mJ, 1-kHz cryogenic Yb:YAG laser amplifier
Huijun He, Jun Yu, Wentao Zhu, Qingdian Lin, Xiaoyang Guo, Cangtao Zhou and Shuangchen Ruan

124207 Ghost imaging-based optical cryptosystem for multiple images using integral property of the Fourier transform
Yi Kang, Leihong Zhang, Hualong Ye, Dawei Zhang and Songlin Zhuang

JUST FOR AUTHORS
Chinese Physics B

124208 Asymmetric coherent rainbows induced by liquid convection
Tingting Shi, Xuan Qian, Tianjiao Sun, Li Cheng, Runjiang Dou, Liyuan Liu and Yang Ji

124209 Computational ghost imaging with deep compressed sensing
Hao Zhang, Yunjie Xia and Deyang Duan

124210 Refocusing and locating effect of fluorescence scattering field
Jian-Gong Cui, Ya-Xin Yu, Xiao-Xia Chu, Rong-Yu Zhao, Min Zhu, Fan Meng and Wen-Dong Zhang

124701 Phase behavior of rotationally asymmetric Brownian kites containing 90° internal angles
Huaqing Liu, Yiwu Zong, Zhanglin Hou, Thomas G. Mason and Kun Zhao

124702 Effect of deformation of diamond anvil and sample in diamond anvil cell on the thermal conductivity measurement
Caihong Jia, Dawei Jiang, Min Cao, Tingting Ji and Chunxiao Gao

PHYSICS OF GASES, PLASMAS, AND ELECTRIC DISCHARGES

125201 Fractal microstructure of Ag film via plasma discharge as SERS substrates
Xue-Fen Kan, Cheng Yin, Zhuang-Qi Cao, Wei Su, Ming-Lei Shan and Xian-Ping Wang

125202 Landau damping of electrons with bouncing motion in a radio-frequency plasma
Jun Tao, Nong Xiang, Yemin Hu and Yueheng Huang

CONDENSED MATTER: STRUCTURAL, MECHANICAL, AND THERMAL PROPERTIES

126101 Actively tunable dual-broadband graphene-based terahertz metamaterial absorber
Dan Hu, Tian-Hua Meng, Hong-Yan Wang and Mai-Xia Fu

126102 Band alignment in SiC-based one-dimensional van der Waals homojunctions
Xing-Yi Tan, Lin-Jie Ding and Da-Hua Ren

126104 Suppression of persistent photoconductivity in high gain Ga_2O_3 Schottky photodetectors
Haitao Zhou, Lujia Cong, Jiangang Ma, Bingsheng Li, Haiyang Xu and Yichun Liu

126105 *Ab initio* study of dynamical properties of U–Nb alloy melt
Yong-Peng Shi, Ming-Feng Liu, Yun Chen, Wen-Lin Mo, Dian-Zhong Li, Tao Fa, Bin Bai, Xiao-Lin Wang and Xing-Qiu Chen

126201 Synthesis of flower-like WS_2 by chemical vapor deposition
Jin-Zi Ding, Wei Ren, Ai-Ling Feng, Yao Wang, Hao-Sen Qiao, Yu-Xin Jia, Shuang-Xiong Ma and Bo-Yu Zhang

126701 Nonlinear dynamical stability of gap solitons in Bose–Einstein condensate loaded in a deformed honeycomb optical lattice
Hongjuan Meng, Yushan Zhou, Xueping Ren, Xiaohuan Wan, Juan Zhang, Jing Wang, Xiaobei Fan, Wenyuan Wang and Yuren Shi

126803 Manipulating metal–insulator transitions of VO_2 films via embedding Ag nanonet arrays
Zhangyang Zhou, Jia Yang, Yi Liu, Zhipeng Gao, Linhong Cao, Leiming Fang, Hongliang He and Zhengwei Xiong

JUST FOR AUTHORS
— CHINESE PHYSICS B

CONDENSED MATTER: ELECTRONIC STRUCTURE, ELECTRICAL, MAGNETIC, AND OPTICAL PROPERTIES

127101 Electric and thermal transport properties of topological insulator candidate LiMgBi
Hao OuYang, Qing-Xin Dong, Yi-Fei Huang, Jun-Sen Xiang, Li-Bo Zhang, Chen-Sheng Li, Pei-Jie Sun, Zhi-An Ren and Gen-Fu Chen

127301 Comparison of resonant tunneling diodes grown on freestanding GaN substrates and sapphire substrates by plasma-assisted molecular-beam epitaxy
Xiang-Peng Zhou, Hai-Bing Qiu, Wen-Xian Yang, Shu-Long Lu, Xue Zhang, Shan Jin, Xue-Fei Li, Li-Feng Bian and Hua Qin

127302 Anomalous anisotropic magnetoresistance in single-crystalline Co/$SrTiO_3$(001) heterostructures
Shuang-Long Yang, De-Zheng Yang, Yu Miao, Cun-Xu Gao and De-Sheng Xue

127303 Controllable and switchable chiral near-fields in symmetric graphene metasurfaces
Li Hu, Hongxia Dai, Fayin Cheng and Yuxia Tang

127401 Angular dependence of vertical force and torque when magnetic dipole moves vertically above flat high-temperature superconductor
Yong Yang, Shuai-Jie Yang, Wen-Li Yang and Yun-Yi Wu

127501 Magnetic phase diagram of single-layer $CrBr_3$
Wei Jiang, Yue-Fei Hou, Shujing Li, Zhen-Guo Fu and Ping Zhang

127502 Magnetic anisotropy manipulation and interfacial coupling in $Sm_3Fe_5O_{12}$ films and CoFe/$Sm_3Fe_5O_{12}$ heterostructures
Lei Shen, Guanjie Wu, Tao Sun, Zhi Meng, Chun Zhou, Wenyi Liu, Kang Qiu, Zongwei Ma, Haoliang Huang, Yalin Lu, Zongzhi Zhang and Zhigao Sheng

127701 Insight into influence of thermodynamic coefficients on transient negative capacitance in Zr-doped HfO_2 ferroelectric capacitors
Yuan-Yuan Zhang, Xiao-Qing Sun, Jun-Shuai Chai, Hao Xu, Xue-Li Ma, Jin-Juan Xiang, Kai Han, Xiao-Lei Wang and Wen-Wu Wang

127801 Synthesis of ternary compound in H–S–Se system at high pressures
Xiao Zhang

127802 Tuning energy transfer efficiency in quantum dots mixture by controling donor/acceptor ratio
Chang Liu, Jing Liang, Fangfang Wang, Chaojie Ma, Kehai Liu, Can Liu, Hao Hong, Huaibin Shen, Kaihui Liu and Enge Wang

127803 Tunable wide-angle multi-band mid-infrared linear-to-linear polarization converter based on a graphene metasurface
Lan-Lan Zhang, Ping Li and Xiao-Wei Song

JUST FOR AUTHORS
— Chinese Physics B

INTERDISCIPLINARY PHYSICS AND RELATED AREAS OF SCIENCE AND TECHNOLOGY

128101 Thermal and mechanical properties and micro-mechanism of SiO_2/epoxy nanodielectrics
Tian-Yu Wang, Gui-Xin Zhang and Da-Yu Li

128102 Distribution of donor states on the surface of AlGaN/GaN heterostructures
Yue-Bo Liu, Hong-Hui Liu, Jun-Yu Shen, Wan-Qing Yao, Feng-Ge Wang, Yuan Ren, Min-Jie Zhang, Zhi-Sheng Wu, Yang Liu and Bai-Jun Zhang

128201 Morphological effect on electrochemical performance of nanostructural CrN
Zhengwei Xiong, Xuemei An, Qian Liu, Jiayi Zhu, Xiaoqiang Zhang, Chenchun Hao, Qiang Yang, Zhipeng Gao and Meng Zhang

128401 Excellent thermoelectric performance predicted in Sb_2Te with natural superlattice structure
Pei Zhang, Tao Ouyang, Chao Tang, Chaoyu He, Jin Li, Chunxiao Zhang and Jianxin Zhong

128502 Fabrication of Josephson parameter amplifier and its application in squeezing vacuum fluctuations
Pengtao Song, Xueyi Guo, Kai Xu, Xiaohui Song, Zhan Wang, Zhongcheng Xiang, Hekang Li, Luhong Su, Yirong Jin and Dongning Zheng

128701 Fitness of others' evaluation effect promotes cooperation in spatial public goods game
Jian-Wei Wang, Rong Wang and Feng-Yuan Yu

128901 Evolution mechanism of Weibo top news competition
Fuzhong Nian, Jingzhou Li and Xin Guo

GEOPHYSICS, ASTRONOMY, AND ASTROPHYSICS

129401 Proton loss of inner radiation belt during geomagnetic storm of 2018 based on CSES satellite observation
Zhen-Xia Zhang, Xu-Hui Shen, Xin-Qiao Li and Yong-Fu Wang

JUST FOR AUTHORS
— CHINESE PHYSICS B

View publication stats