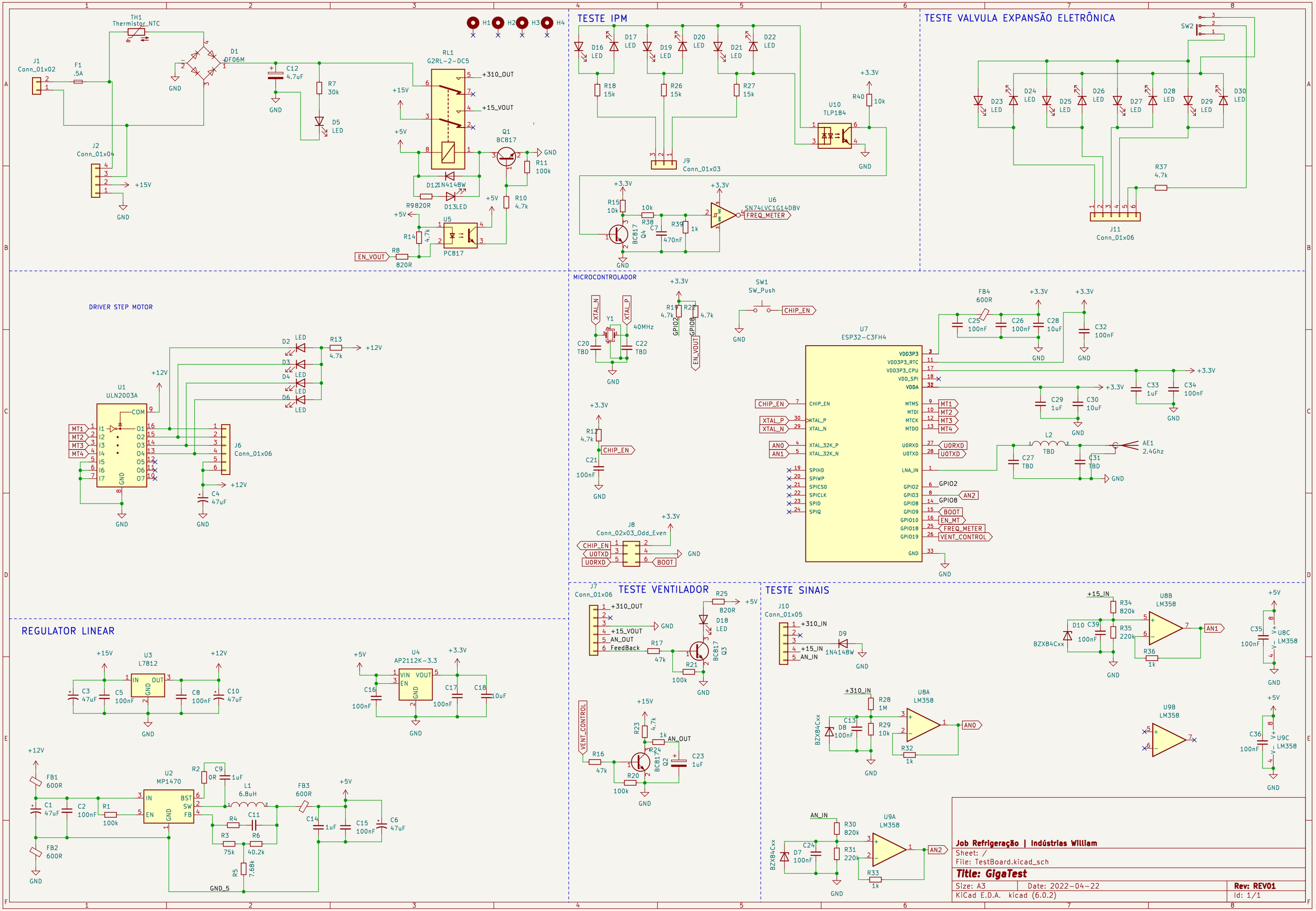
TESTE IPM
TESTE VALVULA EXPANSÃO ELETRÔNICA
DRIVER STEP MOTOR
MICROCONTROLADOR
REGULATOR LINEAR
TESTE VENTILADOR
TESTE SINAIS
TH1 Thermistor_NTC
J1 Conn_01x02
F1 .5A
D1 DF06M
C12 4.7uF
R7 30k
D5 LED
RL1 G2RL-2-DC5
+310_OUT
+15_VOUT
Q1 BC817
R11 100k
R10 4.7k
D12 1N4148W
R9 820R
D13 LED
U5 PC817
R14 4.7k
R8 820R
EN_VOUT
J2 Conn_01x04
D16 LED
D17 LED
D19 LED
D20 LED
D21 LED
D22 LED
R18 15k
R26 15k
R27 15k
J9 Conn_01x03
U10 TLP184
R40 10k
R15 10k
R38 10k
Q4 BC817
C7 470nF
R39 1k
U6 SN74LVC1G14DBV
FREQ_METER
D23 LED
D24 LED
D25 LED
D26 LED
D27 LED
D28 LED
D29 LED
D30 LED
SW2
R37 4.7k
J11 Conn_01x06
U1 ULN2003A
D2 LED
D3 LED
D4 LED
D6 LED
R13 4.7k
J6 Conn_01x06
C4 47uF
Y1 40MHz
XTAL_N
XTAL_P
C20 TBD
C22 TBD
R19 4.7k
R22 4.7k
GPIO2
GPIO8
SW1 SW_Push
CHIP_EN
R17 4.7k
C21 100nF
J8 Conn_02x03_Odd_Even
UOTXD
UORXD
BOOT
U7 ESP32-C3FH4
FB4 600R
C25 100nF
C26 100nF
C28 10uF
C32 100nF
C33 1uF
C34 100nF
C29 1uF
C30 10uF
L2 TBD
C27 TBD
C31 TBD
AE1 2.4Ghz
MT1
MT2
MT3
MT4
AN0
AN1
AN2
FREQ_METER
VENT_CONTROL
U3 L7812
C3 47uF
C5 100nF
C8 100nF
C10 47uF
U4 AP2112K-3.3
C16 100nF
C17 100nF
C18 10uF
U2 MP1470
FB1 600R
FB2 600R
C1 47uF
C2 100nF
R1 100k
R2 0R
C9 1uF
L1 6.8uH
FB3 600R
R4
C11
R3 75k
R6 40.2k
R5 7.68k
C14 1uF
C15 100nF
C6 47uF
GND_5
J7 Conn_01x06
R25 820R
D18 LED
R17 47k
R21 100k
Q3 BC817
R23 4.7k
R24 1k
R16 47k
R20 100k
Q2 BC817
C23 1uF
J10 Conn_01x05
+310_IN
+15_IN
AN_IN
D9 1N4148W
R34 820k
R35 220k
D10 BZX84Cxx
C39 100nF
U8B LM358
R36 1k
U8C LM358
C35 100nF
R28 1M
R29 10k
C13 100nF
D8 BZX84Cxx
U8A LM358
R32 1k
U9B LM358
U9C LM358
C36 100nF
R30 820k
R31 220k
C24 100nF
D7 BZX84Cxx
U9A LM358
R33 1k
Job Refrigeração | Indústrias William
Sheet: /
File: TestBoard.kicad_sch
Title: GigaTest
Size: A3
Date: 2022-04-22
Rev: REV01
KiCad E.D.A. kicad (6.0.2)
Id: 1/1