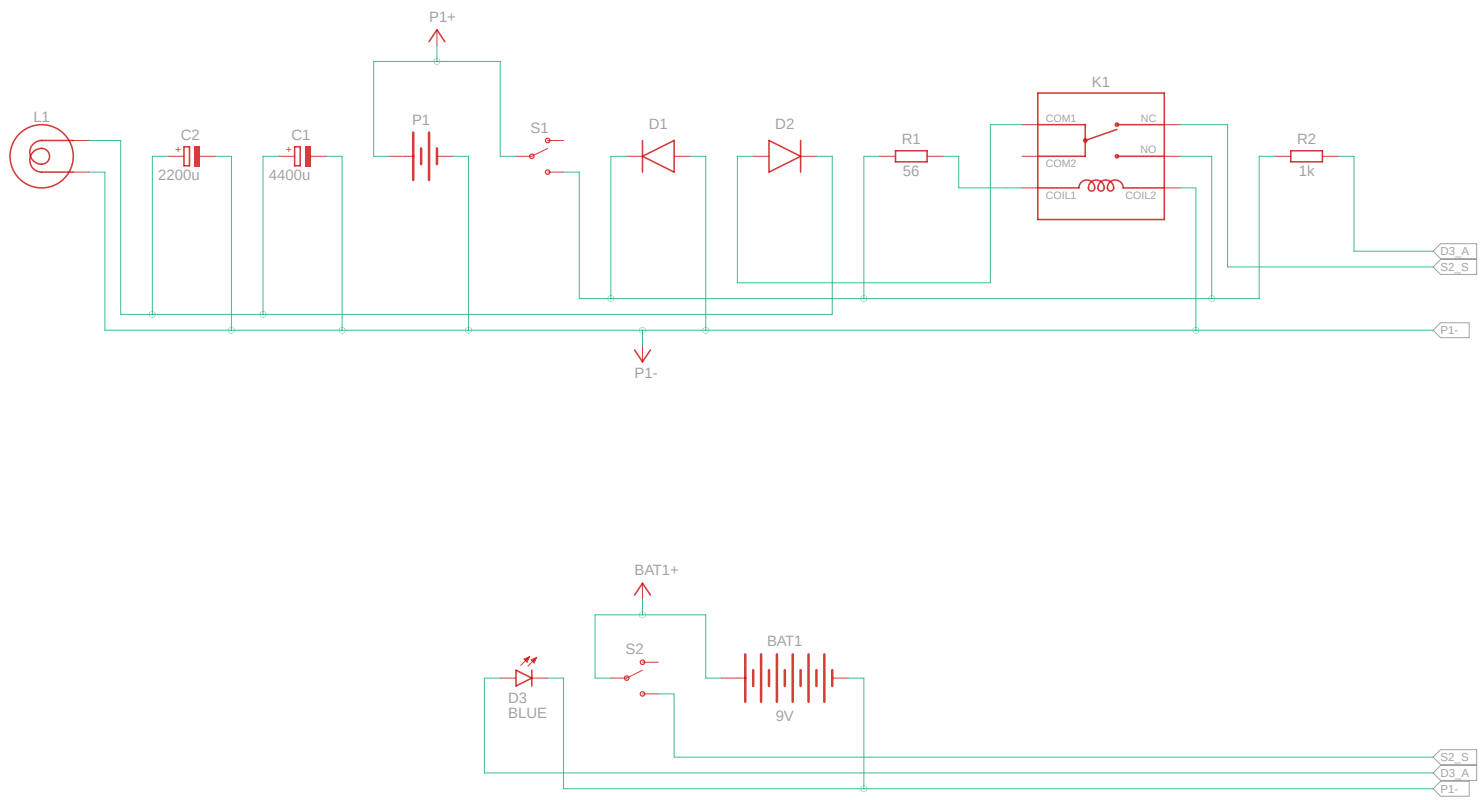

Made with Tinkercad®

Title: Nobreak

Date: 11/07/2025, 23:46:44

Sheet: 1/1