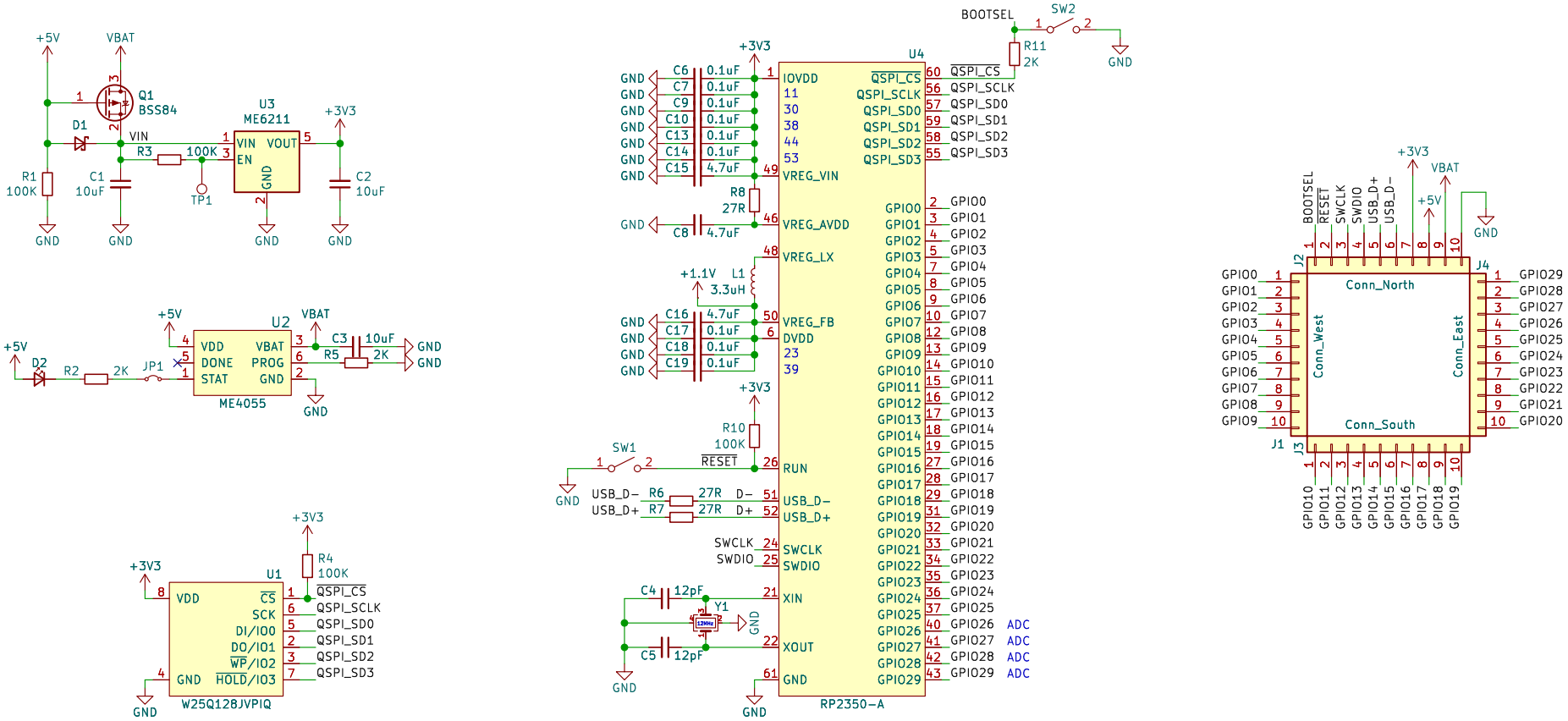

Sheet: /		
File: rp2350_stamp.kicad_sch		
Title: RP2350 Stamp		
Size: A4	Date:	**Rev:**
KiCad E.D.A. 8.0.5		Id: 1/1