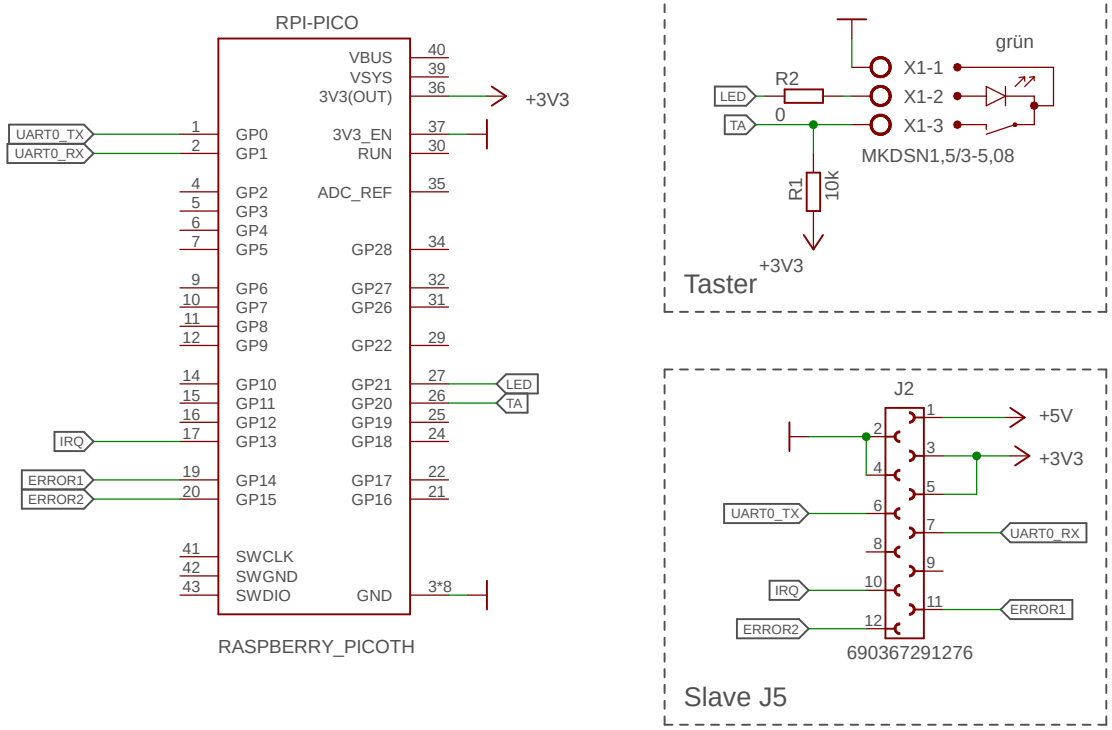

USV Slave IMU-Unit	J.Grabow
	USV-BG-002-SP-A
	10.11.2023 10:38
	Sheet: 1/1