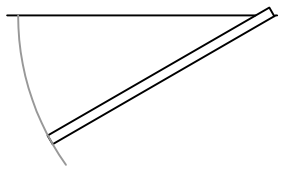

ENGINEERING USE

ITEM	SHAPE	DRAWING #	LINEAR INCHES	PERIMETE
D		50186	29.500	5.875
C		50046	29.500	3.732
B		50182	105.250	5.875

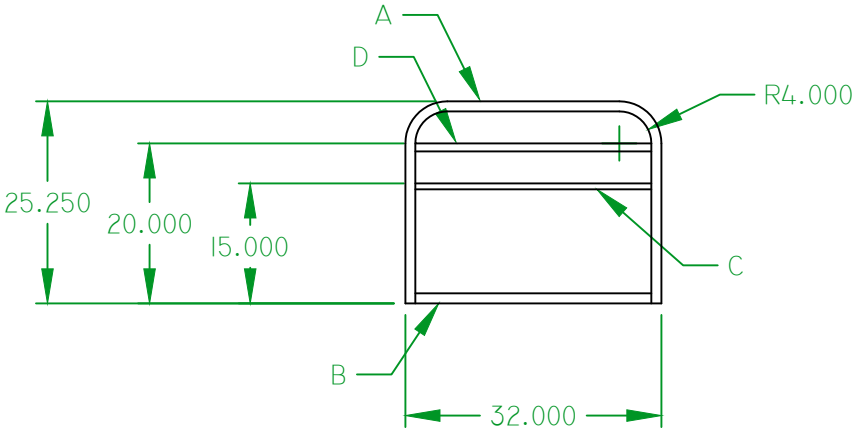

ITEM	QTY	SHAPE	DESCRIPTION
D	1		Q CLIP 1 x 1.25 x 29.50
C	1		D .75 x 1.207 x 29.50
B	1		D-Q 1.25 x 29.50
A	1		D-Q 1.25 x 75.75

NOTE:
1) PART SHOWN LIP FACING.

REV	DESCRIPTION	BY	DATE

BENNINGTON MARINE ELKHART IN

TITLE RAIL, GATE 32.00"

SIZE A

DWN BY NJB DATE 05/27/11

CHK BY DATE

MATERIAL:

SCALE 1/2" = 1'-0"

DWG NO. M004277

APPLICATION ALL G-SERIES MODELS 2012