ARBITRATION POLICY

In-Lane and Online

EFFECTIVE DATE: June 1, 2025

Preview changes highlighted in yellow

(C) 2024 National Auto Auto Auction Association. All rights reserved.

I. General Policies:

1. Fair and Ethical Sale

The sales made at an Auction are intended to promote fair and ethical treatment to both the Buyer and Seller. If Auction determines that the transaction is not fair and ethical to either party, the Seller and the Buyer agree that Auction may cancel the sale, at its sole discretion. Federal, State, and Local laws supersede these policies where applicable.

2. Auction Role in Sale:

a. Auction makes no representations or guarantees on any vehicle sold or offered for sale.

b. Auction is not a party to the contract of the sale. The sales contract is between the Seller and Buyer only.

c. All vehicles bought or sold on the premises must be processed through the Auction office. Failure to do so will result in suspension of trading privileges at Auction.

d. Auction reserves the right to review any audio/video documentation to verify the accuracy of a sale.

e. Any vehicle consigned with the Auction is subject to government inspection, with or without prior notice, by the FBI, State Police, National Auto Theft Bureau, Local Police Authorities, any other governmental agency, or quasi-governmental agency.

3. Auction VIN Policies

All vehicles consigned must have a visible public Vehicle Identification Number (VIN) plate attached to the vehicle by the manufacturer or state inspector (state reassigned VIN only). Those vehicles having a reassigned VIN plate by the State in place of the original VIN plate must be announced or will be subject to sale cancellation or Buyer return. Auction reserves the right to refuse the sale of any vehicle in which the VIN plate appears to be altered in any way.

II. Sale Light System:

Auction has a standard light/video display system to describe the condition and/or disclosures related to the vehicle being sold. The system is defined as:

1. **Green Light –Ride and Drive:** The green light signals that this vehicle is guaranteed under the conditions outlined in this policy by the seller. Any defects or issues requiring disclosure per this policy should be announced using the green and yellow lights.

2. **Yellow Light – Limited Guarantee:** This light is an indication to the Buyer that the Auctioneer or Selling Representative has made announcements that qualify/clarify the condition or equipment and limit arbitration of this vehicle in conjunction with the green light or when "limited guarantee" is announced.

3. **Red Light – Limited As-Is:** Vehicles selling under the red light will only qualify for arbitration under the rules outlined in this policy. (As-Is dollar amount, model years, and mileage are subject to local auction policy).

4. **Blue Light Title Attached/Title Unavailable/Title Absent:** This light is used to announce that the title is not present (auction managed location) at the time of the sale. For Auction rules regarding titles please refer to the Title Arbitration Policy section. If "title attached/unavailable/absent" is not announced, a vehicle could be arbitrated for no title in the absence of auction company policy.

Announcement /Light Legend			
Announcements:	Light Usage Recommendation		
	Green	Yellow	Red
Ride & Drive Only	✓	N/A	N/A
Ride & Drive with Caution Announcement	✓	✓	N/A
Limited Guarantee Only	N/A	✓	N/A
Limited As-is Only	N/A	N/A	✓

III. Seller Responsibilities:

1. Sellers should avoid using ambiguous, confusing, or deceptive announcements or disclosures as these may be grounds for arbitration.

2. Seller will be held responsible for the accuracy and completeness of all representations or descriptions. This includes handouts, catalogues, vehicle markings, condition information or vehicle listings and verbal or written statements made by Seller, Auction, Auctioneer or Selling Representative at the time of sale. This includes the condition report written by or on behalf of the seller as per the "NAAA Generic Condition Report Position Statement". The Seller understands that the sale light/video display is a binding arbitration representation of vehicle condition, and is therefore responsible for ensuring that their vehicles sell under the correct light in the lane.

3. Mileage announcements are not required for vehicles that are deemed exempt from Odometer and Title disclosure laws unless a mileage discrepancy is known or apparent to the seller. The Seller may represent miles on exempt vehicles; any disclosures made by the Seller and all known odometer discrepancies are grounds for arbitration.

4. Title discrepancies must be announced including, but not limited to: not actual miles, salvage, theft recovery, stolen vehicle, flood damage, Lemon Law buybacks and trade assist.

5. If a vehicle is being offered for sale by a third party, an announcement of "3rd Party Seller" is required. Disclosure requirements and time limits are subject to local auction policy.

6. Announcements are required for any matters that relate to the safety or integrity of the vehicle including as per the stated dollar threshold and disclosure requirements stated in this policy, all requirements under local, state or federal statutes or regulations. Announcements must be made both verbally and disclosed on the auction invoice/sale contract/bill of sale or equivalent document in a physical or online auction environment.

7. Sellers must disclose major mechanical modifications or alterations including, but not limited to, engine tuners or programming, high performance or racing alterations, turbo chargers, emissions, etc. Each major modification should be specified in the announcement.

8. The announcement of the presence of warning lights does not exempt a Seller from arbitration responsibilities as defined by the policy. The issue/defect found to be the cause of the light may be arbitrated within the stated time period and dollar amount threshold according to Appendix 1.

9. Sellers choosing to make a specific or restrictive announcement related to a problem with a major component (e.g. Upper Engine Noise) remain subject to arbitration claims related to other unspecified parts or features of that component (e.g. Lower Engine Concerns).

10. The availability of a manufacturer's warranty shall not affect a Buyer's right to arbitrate a vehicle. Regardless of the warranty coverage in terms of the root cause of the complaint, an announcement may be required.

11. In the event of a successful arbitration by the Buyer, the Seller is responsible for reimbursement of all reasonable documented expenses incurred by the Buyer (excluding profit, commissions and detail charges) on vehicles arbitrated for undisclosed conditions. Reimbursements that qualify under these guidelines will be at the sole discretion of the Auction and will be limited to the reasonable and documented expenses at auction (wholesale) repair cost.

12. Seller will not be paid for vehicles in arbitration until arbitration is settled and vehicles are sold. For arbitrations occurring after the seller has been paid, seller is required to promptly return the payment to the auction if the transaction is voided as a result of arbitration.

IV. Buyer Responsibilities:

1. Prior to placing bids, the Buyer is responsible for inspecting the vehicle, listening to and reviewing any verbal or written announcements and disclosures made by the Seller, Auction, Auctioneer or Selling representative. Buyers are also responsible for reviewing all pertinent information available online, including, but not limited to, announcements, disclosures, condition reports, pictures and online listings. Buyers are also responsible for observing and understanding the sale lights (Green, Green/Yellow, Yellow, Red, and/or Blue), which identify various sale conditions for the vehicle. Once the vehicle is sold, the Buyer must review the Auction sales receipt or appropriate document to confirm the vehicle price, disclosures and announcements are correct before legibly printing and signing their name or digitally/electronically signing the Auction sales receipt or appropriate document.

2. It is strongly encouraged that a Buyer should have a Post Sale Inspection (PSI), warranty or assurance product from the auction on vehicles purchased.

3. Buyer agrees to be liable for any and all work done to a vehicle (including a vehicle purchased as title attached, unavailable or absent) prior to returning the vehicle to Auction except on vehicles arbitrated for undisclosed conditions not detectable through vehicle inspection, including but not limited to, not actual miles, salvage, theft recovery, stolen vehicle, flood damage, Lemon Law buybacks and trade assist.

4. The Buyer is financially responsible for any pending sale and assumes all risk of loss until arbitration is final.

5. The Buyer or Buyer's agent (transporter or driver) must document any damage on the gate release prior to removing the vehicle from the Auction or facilitation service provider's location. Auction or facilitation service provider and Seller will not be responsible for any damage not identified on the gate release once the vehicle is removed from the location.

6. The Buyer shall not surrender possession of the vehicle to any claimant, except as required by legal process, nor shall Buyer voluntarily pay or acknowledge the validity of any claim, without the prior approval of Auction. Time is of the essence. Any failure on the part of the Buyer, after becoming aware of said claim, to notify Auction of any claim in a timely manner or failure of the Buyer to cooperate in defending any such claim shall relieve Auction and seller of any liability under this policy.

7. A vehicle is not considered returned until received, inspected and approved for return by Auction management. Any vehicle returned must be in the same or better condition as when sold. Any vehicles delivered to and left on Auction premises without Auction approval remain the sole responsibility of the Buyer. Buyer assumes all risk of loss. Vehicle must be returned in a timely manner consistent with Auction direction.

8. Vehicles with over (auction choice) miles from when sold are not eligible for arbitration.

v. Title Arbitration Policy:

1. All titles submitted by Seller must be in Seller's company name on title or on a properly executed reassignment form. The Seller guarantees the titles of vehicles that are sold through Auction. This guarantee of the title warrants that the title shall be marketable and free and clear of all liens and encumbrances. This includes any brand (such as "salvage") noted upon the current or any prior certificate of title unless such encumbrances were announced at the time the vehicle is sold through Auction and for a period of four (4) years from the date of sale. Seller's liability under this title guarantee shall never exceed the Auction sale price (the "maximum amount") of the vehicle, and this maximum amount shall be reduced by two percent (2%) per month following Auction sale date. All liability under this title guarantee shall expire and terminate four (4) years after Auction sale date. Auction will not be responsible for any expenses incurred on vehicles returned for late title.

2. Seller warrants, represents and guarantees possession and conveyance of a certificate of title, properly executed, valid in the state where the transaction is occurring and clear of all liens and encumbrances (except current year DMV fees in California), and seller warrants and will defend the title against the claims and demands of all persons whatsoever.

3. Seller will ensure that the title must be reassigned directly to Buyer. Any title assigned directly to facilitating auction will not be accepted.

4. Seller will not be paid for vehicles until a transferable title is received.

5. Auction accepts no responsibility for non-titled vehicles sold without title. Seller must announce the vehicle being sold with a bill of sale only and that there is no title to transfer. All non-titled vehicles and equipment will be sold "Limited As-Is."

6. If the title problem is due to a clerical or coding error, or incomplete documentation, Auction shall be given reasonable time after receiving notice to have the error corrected.

7. Applications or other documents related to a duplicate title will not be accepted, unless announced as such or if allowed by the appropriate jurisdiction.

8. Where legal by municipal and/or state law, any vehicle being offered for sale with a foreign (non-US) title, must be disclosed prior to the sale by the seller. Disclosure requirements and time limits are subject to local auction title policy. Vehicle must be legal to sell in the United States.

9. Seller has up to a maximum of [see individual Auction Company's Title Policy (Auction Choice)] calendar days for title to be received by Auction. (Sale day is Day 1). After (Auction Choice) calendar day period, it is the Buyer's option to return the vehicle or wait a reasonable period of time for the title. If, after 90 calendar days, Seller has not produced negotiable title and Buyer has not returned the vehicle, this title guarantee shall not apply and Auction shall have no duty to produce the certificate of title to the Buyer and shall have no duty to pay Seller.

10. Vehicles lacking a properly assigned title or reassignment to transfer a title at time of sale must sell "Title Attached/Title Unavailable/Title Absent," with the Blue light on.

11. Vehicles lacking lien release or a valid repo affidavit for a repossessed vehicle (where allowed by law) must be sold "Title Attached/Title Unavailable/Title Absent," with the Blue light on.

12. In regard to defect in title, and in any matter relating to odometer mileage, odometer statements, or damage disclosure statements: Seller and Buyer agree to indemnify and hold harmless Auction from any liability, loss costs, damage or expense, including attorney fees which may arise either directly or indirectly from the sale and purchase of the consigned vehicle including but not limited to title services provided.

13. Whenever any claim is made by any person against the title of a vehicle, whether by suit or otherwise, the Buyer, after becoming aware of said claim, shall immediately notify Auction. This involves giving full particulars of claim, cooperating fully in defending any legal action, and in taking other steps to minimize possible loss.

14. The Seller/Auction shall not be liable for any costs (including but not limited to reconditioning and repairs) incurred by the Buyer prior to the Buyer receiving the title. Further, the Seller/Auction shall not be liable for any lost profits, losses on sale or lost sale transactions.

15. If, at the time of the Buyer's claim, the title has been received by the auction and/or mailed from Auction to Buyer, Buyer may not return vehicle.

16. If the Seller presents a valid negotiable title to the Auction within close of business on the next day (excluding weekends and auction observed holidays) from the time that the Buyer notifies the auction of their intent to return the vehicle, then the transaction will stand.

17. For vehicles sold with a Manufacturer/Lemon Law Buyback disclosure, the Seller must also disclose any contingencies or additional requirements that the buyer must meet to receive Title. (E.g., Signed disclosures or acknowledgements from subsequent retail buyers).

VI. Previous Canadian and/or Grey Market Vehicles:

1. A "Previous Canadian" disclosure is required for any vehicle (regardless of manufacturing origin) having been registered in a Canadian province. Additional announcements may be required as well due to the use in Canada (i.e. Full or partial voided warranty, foreign title and etc.)

2. Any vehicle not originally built to U.S. specifications can, under certain circumstances, be imported through a registered importer who modifies the vehicle to comply with U.S. equipment and safety regulations (DOT and NHTSA) and then certifies it as compliant, and an independent commercial importer who modifies the vehicle to comply with U.S. emissions regulations and then certifies it as compliant. Only vehicles properly converted to U.S. specifications can be sold and must be announced as such.

3. Required Conversion
a. All other vehicles imported must be imported through a Registered Importer. Registered Importers are required to post a bond with the U.S. Department of Transportation and/or National Highway Transportation Safety Administration. All vehicles imported through a Registered Importer must have:

i. U.S. Safety Standard Certification Label that identifies the Registered Importer
ii. Valid U.S. Title or Legal Foreign Title
iii. Meet ALL Federal NHTSA, D.O.T. and/or E.P.A. Mandated Guidelines
iv. Documentation must be provided at any time by seller.
v. Cleared the mandated wait time.

b. All vehicles, whether imported by a Manufacturer or a Registered Importer, must show miles per hour on the speedometer and miles traveled on the odometer. Title 49, United States Code, Chapter 327, Section 32704, allows replacement odometers without a door frame sticker if the conversion from kilometers to miles can be done without changing the distance traveled by the vehicle; therefore, replacement of an odometer under these circumstances does not have to be announced by the Seller.

VII. Arbitration Guidelines:

Vehicles that have any arbitrable defects (including those outlined in Appendix I) that were not disclosed by the seller or announced at the time of sale must be reported to Auction within the time frame noted below in order to be eligible for arbitration. Vehicles must be returned to Auction in the same or better condition than when purchased with no more than (auction choice) miles.

1. **Time Period:** Refer to Appendix I for arbitration time periods. Sale day is Day 1. Arbitration shall end at the close of business as determined by each Auction on the last calendar day in the time period.

2. **Process:** a. Any single, arbitral mechanical defect (including those outlined in Appendix I) that has a repair cost of $800 or more is subject to arbitration on vehicles sold under qualifying lights and lack of announcement by the seller.

   b. A buyer will be allowed ONE chance at a MECHANICAL arbitration per vehicle transaction. This does not limit a buyer's right to file a subsequent history related arbitration claim based on stated timelines within the Vehicle History section of Appendix I.

   c. The arbitrator will inspect only the defect that is on the initial arbitration claim. Repair costs will be determined by the auction and will reflect local auction/wholesale cost to repair. If price adjustment is made and accepted, vehicle becomes property of the Buyer, and is not subject to any further arbitration. The auction management makes the binding decision upon both the Buyer and Seller on all arbitration matters.

3. **Fees:** Auction reserves the right to assess an arbitration fee to the Buyer. If the arbitration is valid, Auction reserves the right to assess an arbitration fee to the Seller in addition to any charges associated with the arbitration.

4. **Not subject to arbitration:**
   a. By default, vehicles exceeding 20 model years are sold as-is unless otherwise stated or represented by the seller.

   b. Trailers, RVs, watercraft, and motorcycles cannot be arbitrated if they exceed 10 model years with current calendar year counting as year one.

   c. Kit vehicles, homemade vehicles, or modified vehicles are sold "As-Is" and cannot be arbitrated for odometer, structural issues, warranty books, or model year.

   d. Inherent Conditions: No arbitration can be based on conditions that are inherent or typical to a particular model or manufacturer. Manufacturer warranty guidelines will be used where applicable to determine whether the condition is inherent.

   e. Manual Transmissions: Vehicles with standard (full or partial shift) transmissions cannot be arbitrated for manual clutch assemblies unless the defect will not allow a safe test drive.

   f. Wearable Items: Auction will not arbitrate vehicles for wearable items normally worn vs excessively worn or inoperative (not inherent). For purposes of this policy wearable items are defined as parts of the vehicle that the manufacturer recognizes the need for replacement/adjustment during the expected life of the vehicle driven the average miles per model year (15k). These items are normally identified in the Owner's Manual for routine check and replacement and would include, but are not limited to, air ride suspensions, other

suspension components, tires, wipers, brake pads, shoes, rotors, belts, hoses, lubricants/fluids, timing belts, bulbs, filters, shocks and struts.

g. Unsafe vehicles: Auction reserves the right to reject any vehicle that management judges to be unsafe.

h. Vehicles may not be arbitrated based solely upon information provided in Electronic Data Vehicle Histories (EDVH) or printed EDVH reports. Auction and Seller are not bound by information listed in EDVH. Examples of EDVH include Carfax, AutoCheck, NMVTIS, etc. The facilitating Auction may investigate vehicle history based on information found in EDVH for information that may impact arbitration.

i. Auction is not bound by vehicle grades or other types of scoring systems placed upon the vehicle. Buyers may only arbitrate a vehicle based upon damage or defects that were present at the time of the sale of the vehicle.

j. Vehicles with more than (auction choice) miles from time of sale.

k. Vehicle Accessories on vehicles over 4 years old. For this policy, a Vehicle Accessory is defined as "optional or non-essential equipment or components that are not required for the basic operation and function of the vehicle." Accessory examples include Entertainment Systems, Power Windows, Heated Seats, Navigation Systems, Sunroofs/Moonroofs, etc. Furthermore, the determination of four (4) years will be based on calendar years. For example, as of 2023, accessories on vehicle model years of 2019 and earlier would not be subject to arbitration.

l. Oil leaks that are NOT actively dripping and visible by inspection.

Arbitration Policy - Appendix I

Effective Date: August 5, 2024

NAAA Seller Disclosure/Announcement	Disclosure/Announcement Required			Arbitration Time Periods (if applicable)
	Green Light Only	Yellow Light Only	Red Light Only	
This appendix is not all-inclusive. Please refer to the full guidelines for further context relative to these individual elements.	"Ride & Drive"	"Limited Guarantee"	"Limited As-Is"	
Major Components				
Fuel Conversion	YES	YES	YES	B or C
Electric or Hybrid Vehicle Battery Problem (up to eight (8) model years)*			NO	A or C
Engine Problem*				
Cracked or Repaired Block*				
Transmission/Drive Train Problem*				
Front or Rear Differential*				
4X4 System Inoperable*				
ABS Problem*		NO		
Emission Control Equipment: Inoperable, missing, or altered components that change or disable its function as intended by the manufacturer*				
Air Conditioning System*				
SRS – Missing or Problem with Airbags*				B or C
Non-original engine or electric vehicle batteries for current model year and up to 4 model years old. (Excludes items replaced under manufacturer's warranty.)				
Vehicle History Issues				
Structural Damage/Certified Structural Repair or Replacement/Structural Alteration Per NAAA Structural Damage Policy	YES	YES	YES	B or C
Inoperative Odometer				
State-Issued VIN Plates (Including Kit Vehicles)				
Vehicles Being Sold with No Title (Bill of Sale Only)				
Logo or Decal Misrepresentation				
Fire Damage				
Biohazard Vehicles – Existing and/or Non-Remediated				A or C
Stolen Vehicle/Theft Recovery (Including History)				30 Days
Flood Damage (By Auction Inspection)				
Previous Canadian Vehicles				
Total Loss and/or Salvage Retention (By Insurance Records)**				30 Days ** See below for additional parameters.
Not Actual Miles or True Miles Unknown**				
Stolen Vehicle - Active/Open Theft **				
Lemon Law/Manufacturer's Buyback**				
Bonded, Insurance and/or Salvage Titles (Including History)**				
Grey Market Vehicles**				
Flood Damage History (Reported By Government Agencies and/or Insurance Company Records)				120 Days
All Taxis and Livery Requiring Local or State Licenses and Law Enforcement Vehicles		NO	NO	30 Days
Voided Factory Warranty				
Other Issues				
Vehicles Being Sold With a Government Release for Title ,(27A, SF-97-1etc.), CO, MSO, or Repo Affidavit Title (If Required By Law)	YES	YES	YES	7 Days After Receipt of Title
Pending State or Local DMV Fees or Taxes Over $100 Due On Vehicle (If Required By Law)				
Any Disclosure Required By Law				
Convertible Tops*		NO	NO	A or C
Vehicle Accessory Problems* - Up to four (4) Model Years Old				
Exterior Cosmetic Wraps that Exceed 50% of Vehicle Exterior Panels				
Paintwork (3 Panels or More) on Current Model Year and Newer (Excludes Bumpers)				
Vehicles Not Equipped With Air Conditioning. Excludes Vehicles ten (10) Model Years Old or Older.				

Arbitration Time Period Per Sale Channel Breakdown (Subject to local auction policy.)

"A" Inlane-Sale Day Only | "B" Inlane-7 Calendar Days Only | "C" Online-Minimum industry standard = 7 calendar days | Sale Day = Day 1 for all timelines

*** Must disclose defects that are singularly $800 or more to repair or replace.***

***** These transactions may be subject to arbitration regardless of the stated time limits. Arbitration claims initiated after the stated time period will be addressed under the guidelines of the "Title Arbitration Policy" (Paragraph I) and subject to the referenced depreciation terms.***

(C) 2024 National Auto Auto Auction Association. All rights reserved.ti

VIII. Structural Damage, Alteration or Certified Structural Repair or Replacement Policy

The purpose of the NAAA Structural Damage Policy is to define and clarify terminology associated with structural issues and to specify the disclosure requirements of the seller for vehicles offered at NAAA affiliated auctions. The policy is intended to provide adequate disclosure to the buyer for informed purchase decisions and to limit arbitrations for the seller. This policy, along with the main Arbitration Policy will serve as the primary criteria for all arbitration proceedings.

1. Definitions

a. **Vehicle Structure**-The main load-bearing platform of a vehicle that gives strength, stability and design exclusivity and to which all other components of the vehicle are fastened. For purposes of this policy, there are three macro types:

i. **Unibody** - A type of structure whereby the floor pan assembly, roof bows/braces, pillars, etc. are bonded together into one unit, thereby eliminating the need for a separate conventional structure

ii. **Unibody on Frame**-A type of structure whereby a unitized structure is bolted to a conventional structure.

iii. **Conventional Structure**-A type of structure consisting of two symmetrical rails (beams) connected by various cross-members.

b. **UVMS-**Used Vehicle Measurement Standard. The commercially acceptable measurement deviation from the vehicle's original structural specification in order for any deviation not to be considered structural damage.

c. Permanent Damage (aka "Kinked" or "Broken")- The result of two or more objects striking or coming together at a significant change in velocity that permanently deforms the structural component(s) rendering it non-repairable per the manufacturer.

2. Recommended Disclosures

a. **Structural Damage-**Damage to the structure or a specific structural component of the vehicle. Often referred to as frame damage, although it also applies to Unibody and Unibody on Frame structures in addition to Conventional Frame.

b. **Certified Structural Repairs/Replacement-**Repairs to a specifically identified structural component of a vehicle that has been certified to be within the Used Vehicle Measurement Standard (UVMS).

c. **Structural Alteration -**An alteration to the vehicle's structure including a lengthened or shortened frame, a modified suspension, or the installation or removal of after-market accessories.

3. Seller Disclosure Requirements

Sellers must disclose permanent structural damage, any structural alterations, structural repairs or replacements (certified or non-certified) as outlined in this policy prior to selling a vehicle at auction regardless of sales channel or light condition. Disclosures are required for the following:

a. Any/all existing permanent (non-repairable aka kinked or broken) structural damage as defined in this policy

b. Improper and/or substandard prior repairs (not meeting OEM repair guidelines)

c. Repairs not certified using OEM guidelines or to be within the UVMS Improper alterations to the structure Lengthened or Shortened structure verified by visual inspection.

d. Altered suspension that requires the structure to be modified from its OEM form.

e. After-market accessories installed or removed to the structure.

f. Towing packages installed (or removed) where new holes are drilled, OEM holes are enlarged, or if the towing package is welded or brazed to the structure.

g. Multiple access holes (regardless of size) or singular access holes greater than 5/8". Access holes between 1/4" and 5/8" are subject to disclosure based upon location and condition of structural component.

h. Corrosion of structural components determined by one or more of the following; when the substrate loses its shape, the original bonds near the affected area are loose or are no longer in existence, the original thickness of the substrate has been changed by more than 25%, the affected area no longer possesses its absorption or deflection properties.

i. Structural tear damage (i.e. transport tie down) if more than 1" in length (measured from tear start/stop points)

j. Damage due to improper jacking or lifting that permanently deforms structural components outlined in this policy.

k. Damage due to contact with parking abutments and/or road debris that permanently deforms structural components outlined in this policy.

l. Roof bows/braces that have been modified, have existing permanent damage or removed. A replaced roof skin is not a required disclosure in terms of the Structural Damage Policy.

m. The C pillar/quarter or Cab panel may or may not be a structural component(s) as per the vehicle manufacturer.

4. Arbitration Rules for Structural Damage, Alteration, Certified Repairs or Certified Replacement

a. A vehicle may be arbitrated if it has undisclosed existing permanent damage alteration, Certified Repairs or Certified Replacement, which should have been disclosed under this policy, even though the vehicle is within the UVMS. If a structural issue is properly disclosed, the vehicle may only be arbitrated for improper repair of the designated area, existing permanent damage or repairs to other areas of the vehicle not disclosed, or for failure to be within the UVMS that was verified by visual inspection.

b. Damaged or replaced radiator core supports or rear body panels do not require a structural disclosure under this policy.

c. Damage to the aprons, rail floor pan assembly, inner wheelhouse (upper or lower), D pillar (if equipped) or other ancillary structural components on a unitized structure in the area where the radiator core support or rear body panel attaches will require a disclosure if permanent damage exists.

d. Brazed exhaust hangers are not a required disclosure under this policy.

e. Facilitating auction will, at its discretion, have a vehicle measured according to the UVMS at a facility of its choice. Prior to sending the vehicle for measurement, the auction reserves the right to complete a visual verification of the physical condition of the vehicle to determine that it should be measured. If the measuring facility determines that the vehicle is within the UVMS, the buyer of the vehicle will be responsible for the charges paid to the facility. Likewise, if the measuring facility determines that the vehicle is not within the UVMS, the seller will be responsible for the charges paid to the facility.

f. Visual evidence supersedes any/all mechanical or electronic measurements.

g. For measurements according to the UVMS, the following guidelines will apply:

   i. The vehicle structure must measure to a total tolerance of no more than +/- 8 millimeters (mm) of published specification of length, width and height at control points that capture the front (2), center (4) and rear (2) sections of the vehicle.

   ii. Symmetrically (comparative measure from side to side and point to point based on point measurement), the length, width and height must measure to a difference of no more than 6 mm. Upper body measurements (tram gauge) by themselves will not be adequate.

h. Buyer must arbitrate any/all structural misrepresentations as outlined in this policy within published timelines (outlined in the main Arbitration Policy Guidelines) from date of purchase (purchase day counts as Day One).

i. The buyer must contact and follow the arbitration process of the auction where the vehicle was purchased including the auction's direction for return of the vehicle and the timeframe allowed for the vehicle to be returned.

j. In the event of improperly disclosed structural damage by the seller, the buyer will be entitled to reimbursement in accordance with the main Arbitration Policy.

	Structural Components	Structural Damage Disclosure Requirement		
		Unibody	Unibody on Conventional Structure	Conventional Structure
1.	**Frame Rails** (Including Front, Center and Rear Rails)	Existing Permanent Damage, Removed, Modified, Repaired or Replaced		
2.	**Spring Pod, Torque Box or Stabilizer Mount**	N/A	Existing Permanent Damage, Removed, Modified, Repaired or Replaced	
3.	**Cross Members** (Except Bolt-On)	Existing Permanent Damage, Removed, Modified, Repaired or Replaced		
4.	**Apron Assembly**	Existing Permanent Damage, Removed, Modified, Repaired or Replaced		N/A
5.	**Strut Tower Assembly**	Existing Permanent Damage, Removed, Modified, Repaired or Replaced		N/A
6.	**Cowl Panel/Firewall**	Existing Permanent Damage, Removed, Modified, Repaired or Replaced		N/A
7.	**Support Pillars** (Includes A, B, C*, D)	Existing Permanent Damage, Removed, Modified, Repaired or Replaced		
8.	**Roof Braces/Bows**	Existing Permanent Damage, Removed, Modified, Repaired or Replaced		
9.	**Rocker Panel** (Outer)	Replacement Only		N/A
10.	**Rocker Panel** (Inner)	Existing Permanent Damage, Removed, Modified, Repaired or Replaced		N/A
11.	**Floor/Trunk Panels**	Tears 1" or More, Existing Permanent Damage, Removed, Modified, Repaired or Replaced Panels		N/A
12.	**Quarter* or Cab* Panel**	Replacement Only		N/A
13.	**Inner Quarter Panel Assembly** (Includes Inner Wheelhouse Panel, Rear Strut Tower, and Wheelhouse Extension Lower)	Existing Permanent Damage, Removed, Modified, Repaired or Replaced		N/A

** Only Applies to Components Deemed Structural Per the Vehicle Manufacturer.*

TYPICAL UNIBODY STRUCTURE

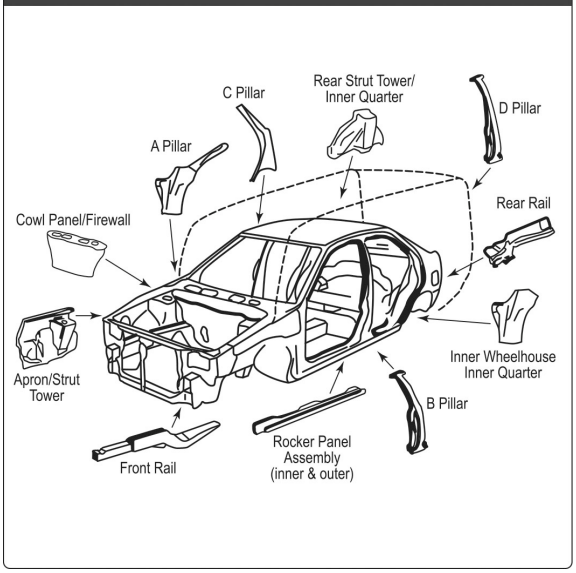

TYPICAL UNIBODY ON CONVENTIONAL STRUCTURE

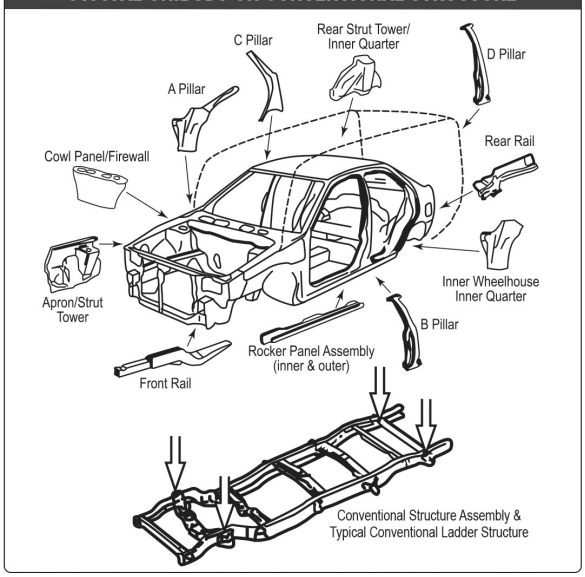

TYPICAL CONVENTIONAL PERIMETER STRUCTURE

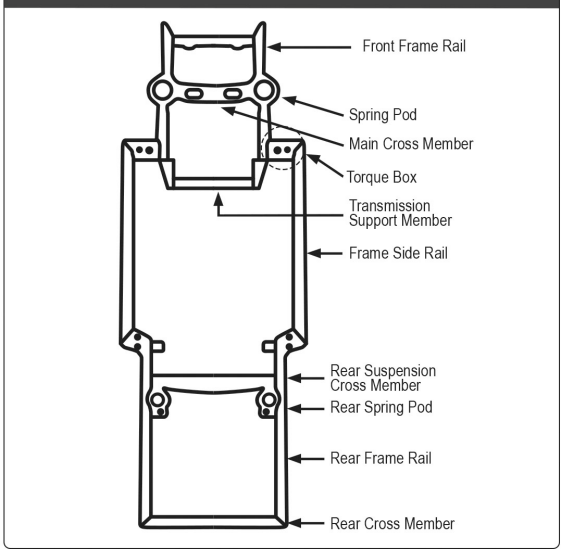

Flood Damage Policy

Vehicles are frequently exposed to moisture during their ordinary operation, maintenance, and reconditioning. Occasionally, such exposure may leave residual marks or indicators similar to those left by exposure or immersion of the vehicle in floodwater. In determining what conditions require disclosure or in arbitrating vehicles for flood exposure/damage it is critical that the total condition of the vehicle be considered including VIN data history. Disclosure requirements can be found in Appendix I.

1. Disclosure Not Required

No disclosure is required nor is arbitration allowed for the following types of water exposure, provided that none of the components outlined below are damaged:

a. Rain, snow or sleet due to open windows, doors or tops or leaking seals.

b. Car wash or rinse water.

c. Carpet or upholstery shampooing or cleaning.

d. Stream, pond, puddle or floodwater that does not rise above the rocker panel or otherwise enter the passenger compartment.

e. Stream, pond, puddle or floodwater that enters the luggage compartment, but does not damage any electrical components (such as lighting or wiring harness) or does not enter the passenger compartment.

2. Disclosure Required

Disclosure is required and arbitration shall be allowed under the following conditions:

a. The title has been correctly branded indicating flood history of the vehicle.

b. Any of the following components have been damaged due to stream, pond, puddle or floodwater immersion/ingress:

i. Front or rear internal lighting or wiring harnesses
ii. Engine and its major components
iii. Transmission and differential
iv. Dash instrument panel and wiring
v. Passenger seat cushions
vi. Power seat functions or window motor
vii. Major sound system components