Installation Guide of Shaft Grounding Rings

Installation Steps

Inspect Product Appearance: Visually examine the entire circumference of the CR surface. Ensure the ring body is free of dents, and the conductive fibers show no mechanical damage, breaks, or deformation.

Pre-Treat Assembly Surfaces: Use a non-woven cloth to wipe clean the motor shaft journal and the mating surface of the CR installation hole in both directions. Ensure no foreign matter, such as metal particles, remains.

Handle with Care During Installation: Always hold the CR by the metal ring body. Do not place fingers on the conductive fibers to avoid compression and potential breakage. Avoid forcing the fibers into hard interference fits, as this may damage them.

Recommendations:

- Shaft roughness should ideally be **< Ra 1.2**.
- CR press-fit force should be **3000–6000 N** (depending on customer operating conditions).

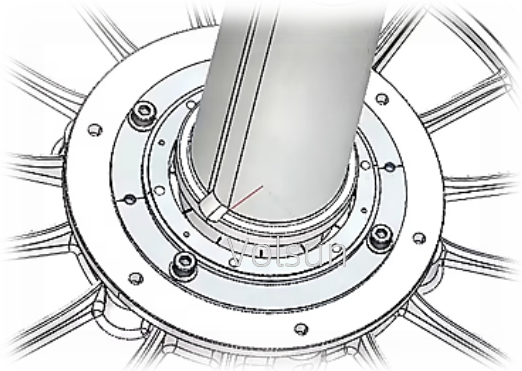

Note: For specific details, please contact Volsun.