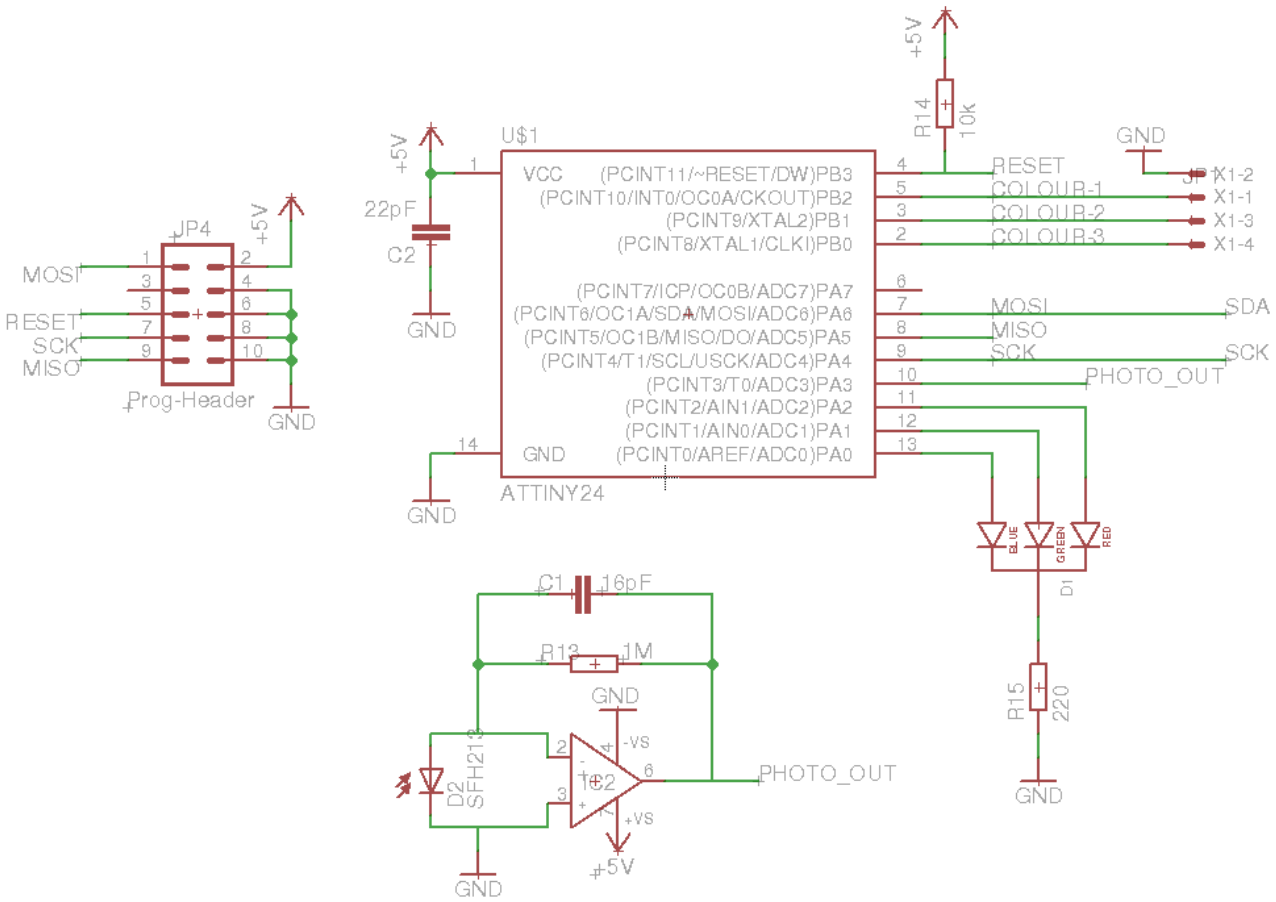
JP4
MOSI
RESET
SCK
MISO
Prog-Header
GND
+5V
U$1
VCC
(PCINT11/~RESET/DW)PB3
(PCINT10/INT0/OC0A/CKOUT)PB2
(PCINT9/XTAL2)PB1
(PCINT8/XTAL1/CLKI)PB0
(PCINT7/ICP/OC0B/ADC7)PA7
(PCINT6/OC1A/SDA/MOSI/ADC6)PA6
(PCINT5/OC1B/MISO/DO/ADC5)PA5
(PCINT4/T1/SCL/USCK/ADC4)PA4
(PCINT3/T0/ADC3)PA3
(PCINT2/AIN1/ADC2)PA2
(PCINT1/AIN0/ADC1)PA1
(PCINT0/AREF/ADC0)PA0
GND
ATTINY24
22pF
C2
R14
10k
RESET
COLOUR-1
COLOUR-2
COLOUR-3
X1-1
X1-2
X1-3
X1-4
MOSI
MISO
SCK
SDA
PHOTO_OUT
BLUE
GREEN
RED
D1
R15
220
C1
16pF
R13
1M
D2
SFH213
IC2
-VS
+VS
PHOTO_OUT

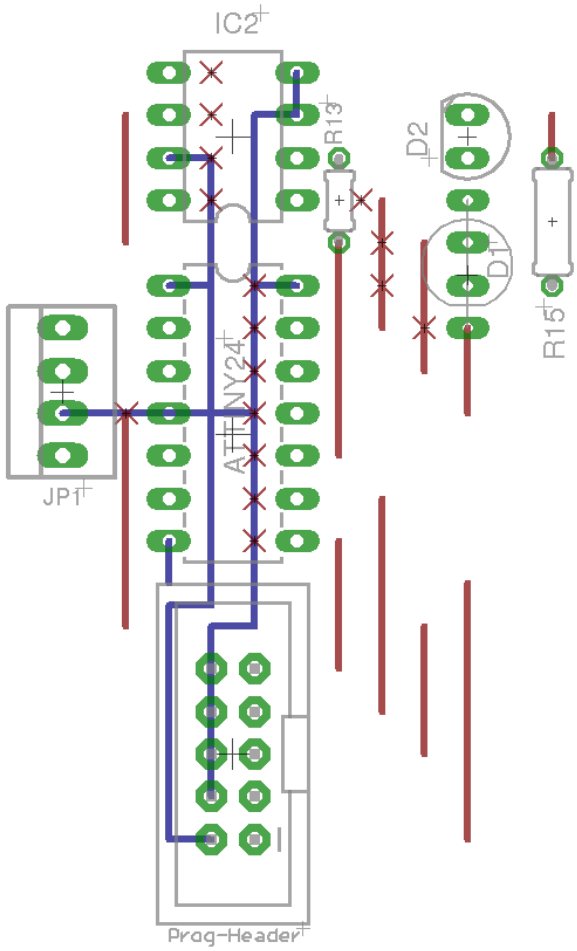
IC2
R13
D2
D1
R15
ATTINY24
JP1
Prog-Header