TORQUE FORCE

OEM-DEDICATED COMPONENT SUPPLIER

CABLE DRUM
AND
TORSION SPRING MANUAL

CANIMEX

Since 1969

TABLE OF CONTENTS

DRUMS SPECIFICATIONS 4-77

STANDARD-LIFT DRUMS 5-20

PHYSICAL SPECIFICATION 8-11

D300-112. 12

D300-114 13

D400-96 / D400-123 14

D400-144 15

D525-216 16-17

D800-384 18-20

HI-LIFT DRUMS. 21-69

PHYSICAL SPECIFICATION 24-27

D400-54. 31

D525-54 32-37

D575-120 38-45

D6375-164. 46-57

D800-120 58-69

VERTICAL-LIFT DRUMS 70-77

PHYSICAL SPECIFICATION 72-75

D850-112 / D1100-216 / D1350-336 76-77

STATIONARY & WINDING PLUGS 78-86

WINDING PLUG PHYSICAL SPECIFICATION 80-81

STATIONARY PLUG PHYSICAL SPECIFICATION 82-83

CLEVER PLUGS 84

OTHER COUNTERBALANCING SYSTEMS. 85-86

DUPLEX ASSEMBLY. 85

PCS600 86

COUNTERBALANCING CALCULATION 87-94

EXAMPLE FOR HORIZONTAL TRACK 87-90

STANDARD-LIFT DRUMS (1 SPRING) 87-89

STANDARD-LIFT DRUMS (2 SPRINGS) 89-90

HIGH-LIFT DRUMS (2 SPRINGS) 90-91

VERTICAL-LIFT DRUMS (2 SPRINGS) 91-92

EXAMPLE FOR DOOR WITH PITCH 87-90

STANDARD-LIFT WITH PITCH ANGLE 87-89

GENERAL COUNTERBALANCING CALCULATION SHEET .94

APPENDIX 95-98

MAX. INCH POUND SPRING CAPACITY TABLE. 95

DIVIDER AND DEAD COIL FACTOR TABLE 96

ROOF PICTH ANGLES AND THEIR EQUIVALENT SINES 97

WEIGHT (LB) PER INCH OF SPRING. 98

INTRODUCTION

Introducing our new Torque Force Reference Guide

At Canimex, we work closely with our customers to continually develop and deliver leading-edge solutions to facilitate optimized performance. This useful Guide is a practical and convenient reference containing all the necessary technical support information needed for finely tuned garage door counterbalancing. Such a comprehensive listing of data, schematics and specifications is just a small example of our ongoing commitment to service and excellence.

Customized for installers of sectional garage doors, this manual contains specific guidelines on the most efficient, accurate and trouble-free methods of calculation for today's garage door installations, including the revolutionary new "plug & play" Canimex Counterbalance Calculation. From choosing the best drum for your specific needs to selecting the best plug and spring wire diameter to counterbalance the system, the Canimex Torque Force Reference Guide... guides you through it.

Canimex: The Driving Force in Innovation

Founded in 1969, Canimex began as a distributor of mechanical power transmission components and industrial supplies for the manufacture of snowmobiles and the agricultural machinery industry. Today, Canimex's Torque Force division is recognized as a world-class dedicated OEM supplier, committed to delivering a broad range of specialized, high-value hardware components to access system manufacturers.

As a flexible, solution-driven provider, we benefit from an internal and worldwide manufacturing network, unmatched production capabilities and a quality assurance program that is second to none. Leveraging our considerable engineering and design expertise, we have the capabilities to rapidly custom-design and deliver highly innovative, cost-competitive products to meet both the immediate and future needs of our OEM customers.

Canimex inc.
285 St-Georges Street
Drummondville, Quebec
Canada J2C 4H3

Tel.: 1-855-777-1335
Fax: 819-477-0776
E-mail: torqueforce@canimex.com

www.canimex.com

COMMON DEFINITIONS

The following terms are those most commonly used in the industry.

Torque:	Twisting force on an axis measured in lb-in. (Nm).
IPPT:	Inch Pound Per Turn: torque delivered by a spring for each turn wound.
MIP:	Maximum Inch Pound: maximum torque that can be delivered by a spring for a determined number of cycles.
Moment Arm:	Distance between Cable Center and Shaft Center.
HMA:	High Moment Arm: maximum moment arm on a drum for a given cable.
LMA:	Low Moment Arm: minimum moment arm on a drum for a given cable. (in this manual HMA and LMA are always given for the maximum cable diameter for a drum)
Multiplier:	Ratio between HMA and number of turns on the spring.
Active Coils:	The number of working coils in a spring.
Dead Coils:	The number of coils rendered inactive by the spring plugs.
Divider:	Constant to calculate the length of the spring.
Pitch Factor:	Factor to calculate the multiplier of an installation with a pitch.
Zero Balance Point:	Maximum percentage of the weight off-balanced during door opening operation

COMMON INFORMATIONS ON DRUMS AND PLUGS

- Canimex controls the physical specifications of its screws. Only use the set screws provided by Canimex.
- All Torque Force drums must be used with a minimum of 1/2 turn of Inactive Wrapping.
- Unless otherwise specified, the torque applied on set screws must never exceed 300 lb-in. (34Nm).
- Upon request, Torque Force drums can be supplied with an exclusive adjustable cable anchoring feature.
- Canimex strictly forbids the alteration of its products. If you have a special application or special needs, please contact Canimex Engineering for guidance.
- Canimex plugs and drums meet DASMA 102 standard.
- Canimex plugs and drums meet DASMA 103 standard.
- Canimex plugs and drums meet EN12604.
- Canimex plugs and drums are made of Die-Cast Aluminum.
- The data in this manual was exact at the edition of the document. For updated physical specifications, please refer to the latest FCUO drawings.
- All products in this guide are controlled Canimex designs. Specifications may be updated without notice.

TORQUE FORCE DRUM CLASSIFICATIONS

Drums are classified as per function of their use. Table below shows all Torque Force drums in their particular category.

STANDARD-LIFT													
DRUM		TOTAL WRAPPING		HMA		LMA		MAX. LOAD PER DRUM		MAX. CABLE DIA.		MAX. DOOR HEIGHT	
Imperial	Metric	in.	mm	in.	mm	in	mm	lb	kg	in.	mm	in.	mm
D300-112	M76-2860	118	2986	1.563	39,60	1.563	39,60	350	160	1/8	3	113	2861
D300-144	M76-3670	150	3794	1.563	39,60	1.563	39,60	350	160	1/8	3	145	3670
D400-96	M102-2400	106	2677	2.275	57,68	2,063	52.30	265	120	1/8	3	98	2490
D400-123	M102-3125	132	3348	2.293	58,26	2,078	52,80	375	170	5/32	4	125	3165
D400-144	M102-3670	155	3944	2.293	58,26	2.078	52.80	375	170	5/32	4	148	3761
D525-216	M134-5500	240	6115	2.936	74.69	2.719	69,18	750	340	3/16	5	231	5881
D800-384	M203-9750	402	10209	4.313	109,38	4.125	104.60	1100	500	1/4	6	389	9866

HIGH-LIFT											
DRUM		CABLE CAPACITY OF FLAT		LMA		MAX. LOAD PER DRUM		WIRE DIA.		MAX. HIGH LIFT	
Imperial	Metric	in.	mm	in	mm	lb	kg	in.	mm	in.	mm
D400-54	M102-1375	121	3069	2.078	52.80	275	125	5/32	4	54	1376
D525-54	M134-1375	179	4564	2.719	69.18	500	227	3/16	5	54	1384
D575-120	M146-3050	145	3678	2.969	75.53	500	227	3/16	5	118	2996
D6375-164	M162-4165	229	5803	3.313	83.96	800	363	1/4	6	164	4156
D800-120	M203-3050	266	6737	4.125	104.60	1100	500	1/4	6	119	3028

Maximum door height = Amount of high lift + Capacity of Flat portion
Door height - high lift mut not exceed capacity of flat portion

VERTICAL-LIFT										
DRUM		MAX. DOOR HEIGHT		LMA		MAX. LOAD PER DRUM		WIRE DIA.		NUMBER OF TURNS
Imperial	Metric	in.	mm	in	mm	lb	kg	in.	mm	Turns
D850-132	M216-3350	129	3297	1.344	34.25	425	193	3/16	5	8
D1100-216	M280-5500	218	5558	1.344	34.25	660	300	3/16	5	11
D1350-336	M340-8500	331	8401	1.375	34.75	1100	500	1/4	6	14

Note: Always use drums with at least 1/2 turn of inactive wrapping.

STANDARD-LIFT DRUMS

STANDARD-LIFT DOOR

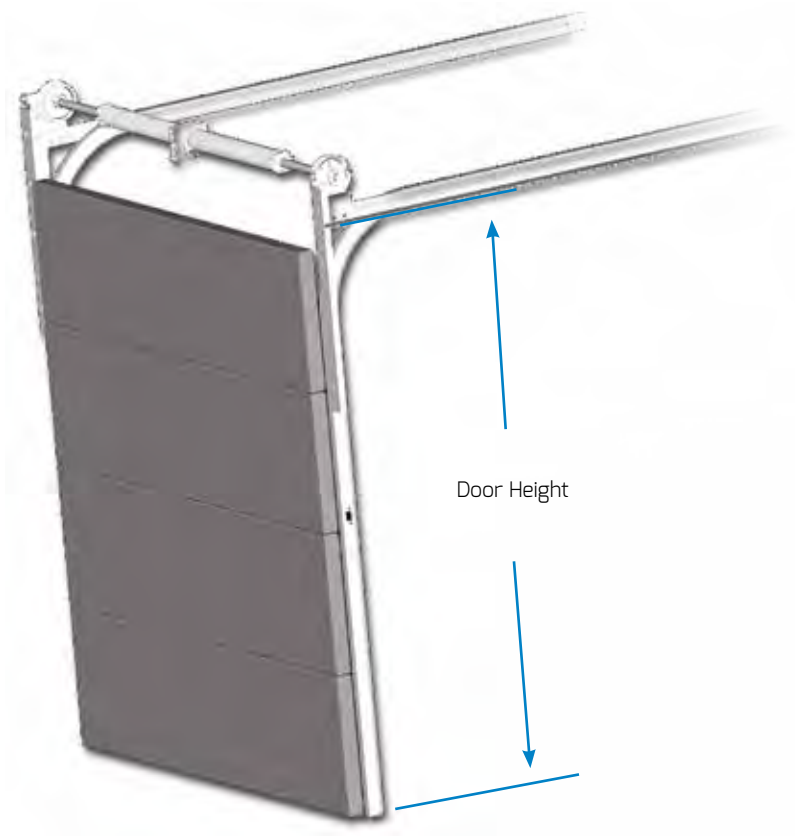

FORMULAS	
Turns =	$\frac{\text{HMA}}{\text{Mullitplier}}$
FOR STANDARD TRACK	
Open weight =	$\frac{\text{Radius} + 2}{\text{Height}}$ X Weight
FOR LOW HEADROOM	
Open Weight =	$\frac{9}{\text{Height}}$ X Weight
FOR PITCHED TRACK	
Open Weight =	$\left[\frac{17'' + (\text{height}-17'')\sin(\text{track angle})}{\text{Height}}\right]$ X Weight

STANDARD-LIFT DRUMS

D300-112
(M76-2860)

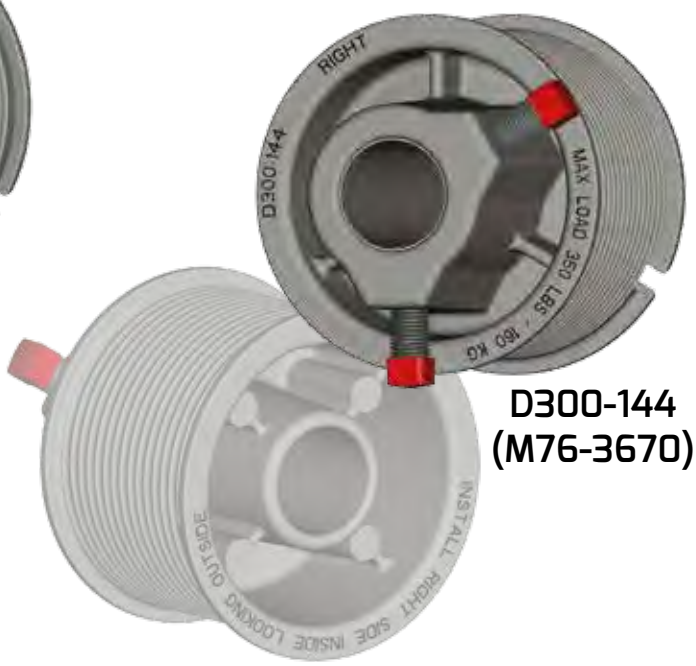

D300-144
(M76-3670)

D400-96
(M102-2400)

D400-96 W/KW
(M102-2400)

The above illustrations are for reference only. Canimex can change the design of drums without notice.

D400-144
(M102-3360)

D525-216
(M134-5500)

D400-123
(M102-3125)

D800-384
(M203-9750)

The above illustrations are for reference only. Canimex can change the design of drums without notice.

PHYSICAL SPECIFICATIONS ON STANDARD-LIFT DRUMS (IMPERIAL)

VIEW FROM SET SCREW SIDE

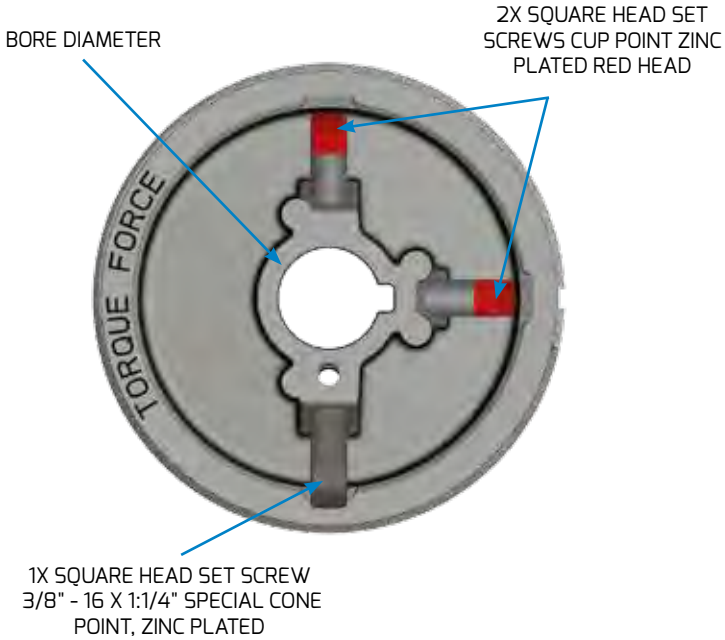

DRUM NAME	INACTIVE WRAPPING	DIMENSIONS						
STANDARD-LIFT	NUMBER OF INACTIVE WRAPPING TURNS	BORE DIAMETER	BORE DIAMETER	MAXIMUM OUTSIDE DIAMETER	MAXIMUM WIDTH AT HUB	MAXIMUM CABLE DIAMETER	HIGH MOMENT ARM	FLAT MOMENT ARM
	Turns	1 in.	1:1/4 in.	in.	in.	in.	in.	in.
D300-112	1/2	X	N/A	3.31	2.83	1/8	1.563	1.563
D300-114	1/2	X	N/A	3.37	3.36	1/8	1.563	1.563
D400-96	1/2	X	N/A	4.79	1.64	1/8	2.275	2.063
D400-96 W/KW	1/2	X	N/A	4,79	1,64	1/8	2,275	2,063
D400-123	1/2	X	N/A	4.99	2.34	5/32	2.293	2.078
D400-144	1/2	X	N/A	4.99	2.63	5/32	2.293	2.078
D525-216	1/2	X	X	6.00	3.62	3/16	2.936	2.719
D800-384	1/2	X	X	9.00	5.26	1/4	4.313	4.125

PLEASE NOTE:

- Consult the Common Informations on Drums and Plugs section for the general notice.
- All data relates to Maximum Cable Diameter.
- All these drums must be used with a minimum of 1/2 turn of Inactive Wrapping for safety reasons.
- Cable end anchoring to the drum must meet Dasma 102.

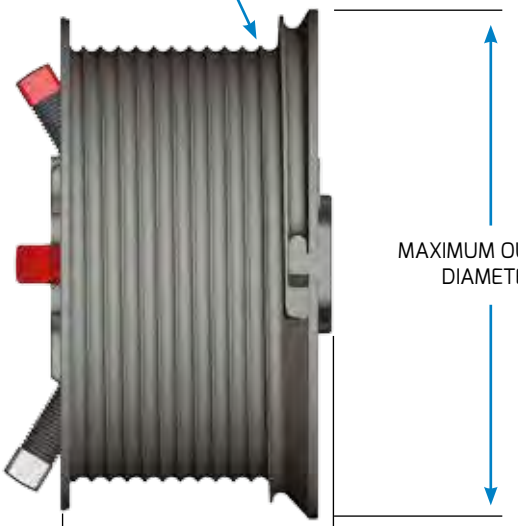

VIEW FROM CABLE ENTRY SIDE

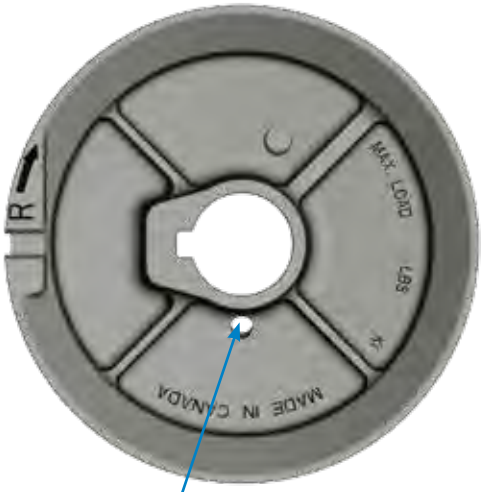

ADJUSTABLE CABLE ANCHOR
(ON REQUEST ONLY)

WRAPPING				MISCELLANEOUS			CABLE LENGHT RULE(1)	
MAXIMUM DOOR HEIGHT	CIRCUM. OF FLAT PORTION	CABLE CAPACITY OF FLAT	TOTAL CABLE CAPACITY	MAXIMUM WEIGHT PER DRUM	APPROX. SHIPPING WEIGHT (WITH TWO SET SCREWS)	SQUARE HEAD SET SCREW IF PRE-INST.	DISTANCE TO ADD FOR BUTTONS ON CABLE	DISTANCE TO ADD FOR ADJUSTABLE CABLE ANCHOR
in.	in.	in.	in.	lb	lb	in.	in.	in.
113	9.82	112.9	117.8	350	0.82	3/8-16x1	5	N/A
145	9.82	144.8	149.7	350	1.05	3/8-16x1	5	N/A
98	12.96	77.7	105.5	265	0.51	3/8-16x1	8	N/A
98	12.96	77.7	105.5	265	0.56	3/8-16x1	8	14
125	13.06	113.6	131.8	375	0.83	3/8-16x1:1/4	8	14
148	13.06	137.1	155.2	375	0.98	3/8-16x1:1/4	8	14
231	17.08	217.8	240.4	750	1.75	3/8-16x1:1/4	10	18
389	25.92	376.0	402.6	1100	8.35	3/8-16x1:1/2	14	29

(1) Distance from cable attachment point on the door to shaft center line + "value on table".

- Recommended seating torque on set screws: 240 lb-in.
- Maximum torque on set screws: 300 lb-in except for third set screw anchoring where the maximum torque is 180 lb-in.
- IPPT: Multiplier X Door Weight.
- Drums must be assembled on a torsion shaft that meets Dasma 102. If drums are used with a solid shaft, a 3:3/4" bent key or 3" straight key must be assembled on the set screw side of the drum. Please refer to canimex drawing 20772-P1, 20994-P1 and 24657-P2 for shaft specifications and to technical document DT-020 for key insertion.
- Data for reference only. Please consult the FCUO drawing for the latest specifications.

PHYSICAL SPECIFICATIONS ON STANDARD-LIFT DRUMS (METRIC)

VIEW FROM SET SCREW SIDE

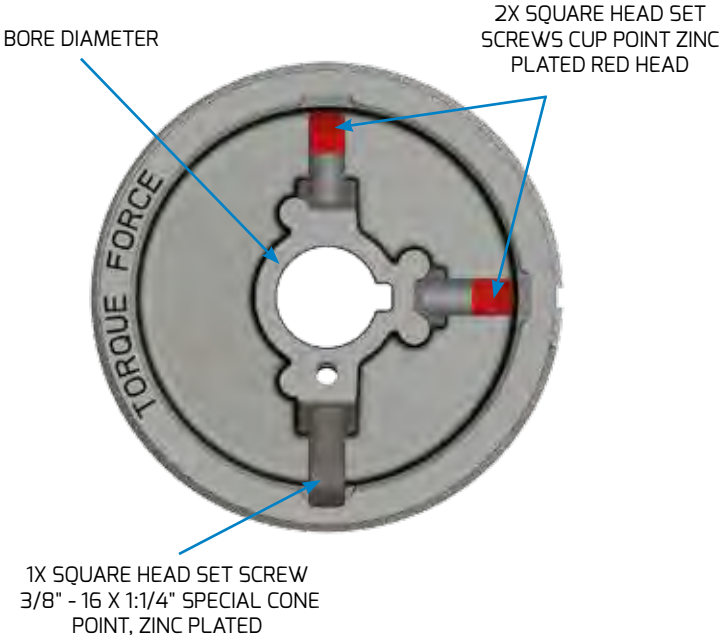

DRUM NAME	INACTIVE WRAPPING	DIMENSIONS						
STANDARD-LIFT	NUMBER OF INACTIVE WRAPPING TURNS	BORE DIAMETER	BORE DIAMETER	MAXIMUM OUTSIDE DIAMETER	MAXIMUM WIDTH AT HUB	MAXIMUM CABLE DIAMETER	HIGH MOMENT ARM	FLAT MOMENT ARM
	Turns	25.4 mm	31.75 mm	mm	mm	mm	mm	mm
M76-2860	1/2	X	N/A	84.1	71.8	3	39.60	39.60
M76-3670	1/2	X	N/A	85.7	85.3	3	39.60	39.60
M102-2400	1/2	X	N/A	121.6	41.6	3	57.68	52.30
M102-2400 W/KW	1/2	X	N/A	121.6	41.6	3	57.68	52.30
M102-3125	1/2	X	N/A	126.7	59.4	4	58.56	52.80
M102-3670	1/2	X	N/A	126.7	66.8	4	58.26	52.80
M134-5500	1/2	X	X	152.4	91.8	5	74.69	69.18
M203-9750	1/2	X	X	228.6	133.6	6	109.38	104.60

PLEASE NOTE:

- Consult the Common Informations on Drums and Plugs section for the general notice.
- All data relates to Maximum Cable Diameter.
- All these drums must be used with a minimum of 1/2 turn of Inactive Wrapping for safety reasons.
- Cable end anchoring to the drum must meet Dasma 102.

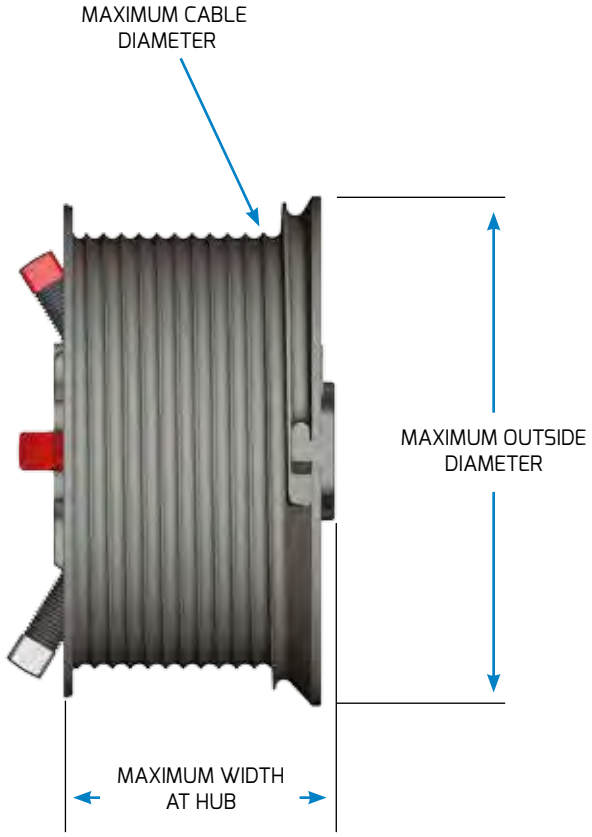

VIEW FROM CABLE ENTRY SIDE

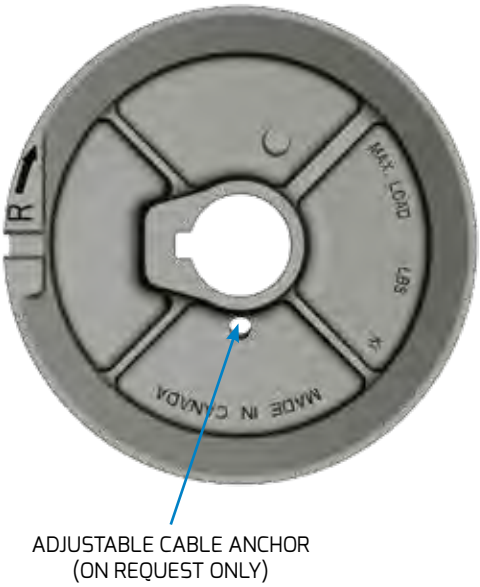

WRAPPING				MISCELLANEOUS			CABLE LENGHT RULE(1)	
MAXIMUM DOOR HEIGHT	CIRCUM. OF FLAT PORTION	CABLE CAPACITY OF FLAT	TOTAL CABLE CAPACITY	MAXIMUM WEIGHT PER DRUM	APPROX. SHIPPING WEIGHT (WITH TWO SET SCREWS)	SQUARE HEAD SET SCREW IF PRE-INST.	DISTANCE TO ADD FOR BUTTONS ON CABLE	DISTANCE TO ADD FOR ADJUSTABLE CABLE ANCHOR
mm	mm	mm	mm	kg	kg	in.	mm	mm
2861	248.8	2866	2986	160	0.37	3/8-16x1	127	N/A
3670	248.8	3670	3794	160	0.48	3/8-16x1	127	N/A
2490	328.6	1972	2676	120	0.23	3/8-16x1	203	N/A
2490	328.6	1971	2676	120	0.255	3/8-16x1	203	355
3165	331.7	2887	3348	170	0.38	3/8-16x1:1/4	203	355
3761	331.7	3483	3944	170	0.44	3/8-16x1:1/4	203	355
5881	434.6	5542	6115	340	0.79	3/8-16x1:1/4	254	460
9866	657.2	9529	10209	500	3.79	3/8-16x1:1/2	356	736

(1) Distance from cable attachment point on the door to shaft center line + «value on table».

- Recommended seating torque on set screws: 27 Nm.
- Maximum torque on set screws: 34 Nm except for third set screw anchoring where the maximum torque is 20 Nm.
- IPPT: Multiplier X Door Weight.
- Drums must be assembled on a torsion shaft that meets Dasma 102. If drums are used with a solid shaft, a 3:3/4" bent key or 3"straight key must be assembled on the set screw side of the drum. Please refer to canimex drawing 19478-p1, 19479-p1, 24191-p1, 24192-p1 and 19477-p1 for shaft specifications and to technical document DT-020 for key insertion. DT-020 "Specifications for drum installation".
- Data for reference only. Please consult the FCUO drawing for the latest specifications.

D300-112

MULTIPLIER FOR STANDARD-LIFT DRUM

TRACK RADIUS										
DOOR HEIGHT		10 INCH		12 INCH		15 INCH			LOW HEADROOM	
(FT.)	(IN.)	MULTI (IN./TURNS)	TURNS ON SPRING	MULTI (IN./TURNS)	TURNS ON SPRING	MULTI (IN./TURNS)	TURNS ON SPRING	PITCH FACTOR	MULTI (IN./TURNS)	TURNS ON SPRING
6'0''	72	0.1777	8.8	0.1717	9.1	0.1629	9.6	0.1629	0.1865	8.4
6'3''	75	0.1719	9.1	0.1665	9.4	0.1583	9.9	0.1583	0.1801	8.7
6'6''	78	0.1665	9.4	0.1615	9.7	0.1539	10.2	0.1539	0.1741	9.0
6'9''	81	0.1614	9.7	0.1567	10.0	0.1497	10.4	0.1497	0.1684	9.3
7'0''	84	0.1566	10.0	0.1523	10.3	0.1458	10.7	0.1458	0.1632	9.6
7'3''	87	0.1521	10.3	0.1480	10.6	0.1420	11.0	0.1420	0.1582	9.9
7'6''	90	0.1478	10.6	0.1440	10.9	0.1383	11.3	0.1383	0.1535	10.2
7'9''	93	0.1438	10.9	0.1402	11.1	0.1349	11.6	0.1349	0.1491	10.5
8'0''	96	0.1399	11.2	0.1366	11.4	0.1316	11.9	0.1316	0.1449	10.8
8'3''	99	0.1363	11.5	0.1331	11.7	0.1284	12.2	0.1284	0.1410	11.1
8'6''	102	0.1328	11.8	0.1298	12.0	0.1254	12.5	0.1254	0.1372	11.4
8'9''	105	0.1295	12.1	0.1267	12.3	0.1225	12.8	0.1225	0.1337	11.7
9'0''	108	0.1263	12.4	0.1237	12.6	0.1198	13.1	0.1198	0.1303	12.0
9'3''	111	0.1233	12.7	0.1208	12.9	0.1171	13.3	0.1171	0.1271	12.3
9'5''	113	0.1214	12.9	0.1190	13.1	0.1154	13.5	0.1154	0.1250	12.5

D300-144
MULTIPLIER FOR STANDARD-LIFT DRUM

TRACK RADIUS								
DOOR HEIGHT		12 INCH		15 INCH			LOW HEADROOM	
(FT)	(IN)	MULTI (IN./TURNS)	TURNS ON SPRING	MULTI (IN./TURNS)	TURNS ON SPRING	PITCH FACTOR	MULTI (IN./TURNS)	TURNS ON SPRING
6'0"	72	0.1717	9.1	0.1629	9.6	0.1629	0.1865	8.4
6'3"	75	0.1665	9.4	0.1583	9.9	0.1583	0.1801	8.7
6'6"	78	0.1615	9.7	0.1539	10.2	0.1539	0.1741	9.0
6'9"	81	0.1567	10.0	0.1497	10.4	0.1497	0.1684	9.3
7'0"	84	0.1523	10.3	0.1458	10.7	0.1458	0.1632	9.6
7'3"	87	0.1480	10.6	0.1420	11.0	0.1420	0.1582	9.9
7'6"	90	0.1440	10.9	0.1383	11.3	0.1383	0.1535	10.2
7'9"	93	0.1402	11.1	0.1349	11.6	0.1349	0.1491	10.5
8'0"	96	0.1366	11.4	0.1316	11.9	0.1316	0.1449	10.8
8'3"	99	0.1331	11.7	0.1284	12.2	0.1284	0.1410	11.1
8'6"	102	0.1298	12.0	0.1254	12.5	0.1254	0.1372	11.4
8'9"	105	0.1267	12.3	0.1225	12.8	0.1225	0.1337	11.7
9'0"	108	0.1237	12.6	0.1198	13.1	0.1198	0.1303	12.0
9'3"	111	0.1208	12.9	0.1171	13.3	0.1171	0.1271	12.3
9'6"	114	0.1181	13.2	0.1146	13.6	0.1146	0.1240	12.6
9'9"	117	0.1155	13.5	0.1121	13.9	0.1121	0.1211	12.9
10'0"	120	0.1130	13.8	0.1098	14.2	0.1098	0.1183	13.2
10'3"	123	0.1106	14.1	0.1075	14.5	0.1075	0.1157	13.5
10'6"	126	0.1083	14.4	0.1054	14.8	0.1054	0.1131	13.8
10'9"	129	0.1061	14.7	0.1033	15.1	0.1033	0.1107	14.1
11'0"	132	0.1040	15.0	0.1013	15.4	0.1013	0.1084	14.4
11'3"	135	0.1019	15.3	0.0994	15.7	0.0994	0.1061	14.7
11'6"	138	0.0999	15.6	0.0975	16.0	0.0975	0.1040	15.0
11'9"	141	0.0981	15.9	0.0957	16.3	0.0957	0.1019	15.3
12'0"	144	0.0962	16.2	0.0940	16.6	0.0940	0.0999	15.6
12'1"	145	0.0956	16.3	0.0934	16.7	0.0934	0.0993	15.7

D400-96 AND D400-96 W/KW

MULTIPLIER FOR STANDARD-LIFT DRUM

TRACK RADIUS								
DOOR HEIGHT		12 INCH		15 INCH			LOW HEADROOM	
(FT)	(IN)	MULTI (IN./TURNS)	TURNS ON SPRING	MULTI (IN./TURNS)	TURNS ON SPRING	PITCH FACTOR	MULTI (IN./TURNS)	TURNS ON SPRING
6'0"	72	0.3374	6.7	0.3219	7.1	0.2837	0.3631	6.3
6'3"	75	0.3266	7.0	0.3124	7.3	0.2757	0.3504	6.5
6'6"	78	0.3165	7.2	0.3033	7.5	0.2681	0.3385	6.7
6'9"	81	0.3070	7.4	0.2948	7.7	0.2608	0.3274	6.9
7'0"	84	0.2980	7.6	0.2866	7.9	0.2539	0.3170	7.2
7'3"	87	0.2895	7.9	0.2789	8.2	0.2473	0.3072	7.4
7'6"	90	0.2814	8.1	0.2715	8.4	0.2410	0.2979	7.6
7'9"	93	0.2738	8.3	0.2645	8.6	0.2350	0.2893	7.9
8'0"	96	0.2666	8.5	0.2579	8.8	0.2292	0.2811	8.1
8'2"	98	0.2619	8.7	0.2536	9.0	0.2255	0.2758	8.2

D400-123

MULTIPLIER FOR STANDARD-LIFT DRUM

TRACK RADIUS								
DOOR HEIGHT		12 INCH		15 INCH			LOW HEADROOM	
(FT)	(IN)	MULTI (IN./TURNS)	TURNS ON SPRING	MULTI (IN./TURNS)	TURNS ON SPRING	PITCH FACTOR	MULTI (IN./TURNS)	TURNS ON SPRING
6'0"	72	0.3425	6.7	0.3268	7.0	0.2879	0.3687	6.2
6'3"	75	0.3317	6.9	0.3172	7.2	0.2798	0.3558	6.4
6'6"	78	0.3214	7.1	0.3080	7.4	0.2720	0.3437	6.7
6'9"	81	0.3117	7.4	0.2993	7.7	0.2647	0.3324	6.9
7'0"	84	0.3026	7.6	0.2910	7.9	0.2576	0.3218	7.1
7'3"	87	0.2939	7.8	0.2832	8.1	0.2509	0.3119	7.4
7'6"	90	0.2858	8.0	0.2757	8.3	0.2445	0.3025	7.6
7'9"	93	0.2780	8.2	0.2686	8.5	0.2384	0.2937	7.8
8'0"	96	0.2706	8.5	0.2618	8.8	0.2326	0.2854	8.0
8'3"	99	0.2637	8.7	0.2553	9.0	0.2270	0.2775	8.3
8'6"	102	0.2570	8.9	0.2492	9.2	0.2217	0.2700	8.5
8'9"	105	0.2507	9.1	0.2433	9.4	0.2166	0.2630	8.7
9'0"	108	0.2446	9.4	0.2377	9.6	0.2117	0.2563	8.9
9'3"	111	0.2389	9.6	0.2323	9.9	0.2070	0.2499	9.2
9'6"	114	0.2334	9.8	0.2271	10.1	0.2025	0.2438	9.4
9'9"	117	0.2281	10.1	0.2222	10.3	0.1982	0.2380	9.6
10'0"	120	0.2231	10.3	0.2175	10.5	0.1941	0.2325	9.9
10'3"	123	0.2183	10.5	0.2129	10.8	0.1901	0.2273	10.1
10'5"	125	0.2152	10.7	0.2100	10.9	0.1875	0.2239	10.2

D400-144
MULTIPLIER FOR STANDARD-LIFT DRUM

TRACK RADIUS								
DOOR HEIGHT		12 INCH		15 INCH			LOW HEADROOM	
(FT)	(IN)	MULTI (IN./TURNS)	TURNS ON SPRING	MULTI (IN./TURNS)	TURNS ON SPRING	PITCH FACTOR	MULTI (IN./TURNS)	TURNS ON SPRING
6'0"	72	0.3425	6.7	0.3268	7.0	0.2879	0.3687	6.2
6'3"	75	0.3317	6.9	0.3172	7.2	0.2798	0.3558	6.4
6'6"	78	0.3214	7.1	0.3080	7.4	0.2720	0.3437	6.7
6'9"	81	0.3117	7.4	0.2993	7.7	0.2647	0.3324	6.9
7'0"	84	0.3026	7.6	0.2910	7.9	0.2576	0.3218	7.1
7'3"	87	0.2939	7.8	0.2832	8.1	0.2509	0.3119	7.4
7'6"	90	0.2858	8.0	0.2757	8.3	0.2445	0.3025	7.6
7'9"	93	0.2780	8.2	0.2686	8.5	0.2384	0.2937	7.8
8'0"	96	0.2706	8.5	0.2618	8.8	0.2326	0.2854	8.0
8'3"	99	0.2637	8.7	0.2553	9.0	0.2270	0.2775	8.3
8'6"	102	0.2570	8.9	0.2492	9.2	0.2217	0.2700	8.5
8'9"	105	0.2507	9.1	0.2433	9.4	0.2166	0.2630	8.7
9'0"	108	0.2446	9.4	0.2377	9.6	0.2117	0.2563	8.9
9'3"	111	0.2389	9.6	0.2323	9.9	0.2070	0.2499	9.2
9'6"	114	0.2334	9.8	0.2271	10.1	0.2025	0.2438	9.4
9'9"	117	0.2281	10.1	0.2222	10.3	0.1982	0.2380	9.6
10'0"	120	0.2231	10.3	0.2175	10.5	0.1941	0.2325	9.9
10'3"	123	0.2183	10.5	0.2129	10.8	0.1901	0.2273	10.1
10'6"	126	0.2137	10.7	0.2086	11.0	0.1863	0.2222	10.3
10'9"	129	0.2093	11.0	0.2044	11.2	0.1826	0.2174	10.5
11'0"	132	0.2050	11.2	0.2003	11.4	0.1791	0.2128	10.8
11'3"	135	0.2009	11.4	0.1965	11.7	0.1757	0.2084	11.0
11'6"	138	0.1970	11.6	0.1927	11.9	0.1724	0.2041	11.2
11'9"	141	0.1932	11.9	0.1891	12.1	0.1692	0.2000	11.5
12'0"	144	0.1896	12.1	0.1857	12.4	0.1662	0.1961	11.7
12'3"	147	0.1861	12.3	0.1823	12.6	0.1632	0.1924	11.9
12'4"	148	0.1849	12.4	0.1812	12.7	0.1623	0.1911	12.0

D525-216

MULTIPLIER FOR STANDARD-LIFT DRUM

TRACK RADIUS								
DOOR HEIGHT		12 INCH		15 INCH			LOW HEADROOM	
(FT)	(IN)	MULTI (IN./TURNS)	TURNS ON SPRING	MULTI (IN./TURNS)	TURNS ON SPRING	PITCH FACTOR	MULTI (IN./TURNS)	TURNS ON SPRING
6'0"	72	0.5712	5.1	0.5443	5.4	0.4928	0.6160	4.8
6'3"	75	0.5532	5.3	0.5284	5.6	0.4790	0.5945	4.9
6'6"	78	0.5362	5.5	0.5133	5.7	0.4657	0.5743	5.1
6'9"	81	0.5201	5.6	0.4989	5.9	0.4531	0.5555	5.3
7'0"	84	0.5050	5.8	0.4852	6.1	0.4411	0.5379	5.5
7'3"	87	0.4906	6.0	0.4722	6.2	0.4296	0.5213	5.6
7'6"	90	0.4770	6.2	0.4598	6.4	0.4186	0.5057	5.8
7'9"	93	0.4641	6.3	0.4480	6.6	0.4082	0.4910	6.0
8'0"	96	0.4519	6.5	0.4368	6.7	0.3982	0.4771	6.2
8'3"	99	0.4403	6.7	0.4261	6.9	0.3886	0.4640	6.3
8'6"	102	0.4292	6.8	0.4158	7.1	0.3795	0.4516	6.5
8'9"	105	0.4187	7.0	0.4061	7.2	0.3708	0.4398	6.7
9'0"	108	0.4087	7.2	0.3967	7.4	0.3624	0.4286	6.9
9'3"	111	0.3991	7.4	0.3878	7.6	0.3544	0.4179	7.0
9'6"	114	0.3899	7.5	0.3792	7.7	0.3467	0.4078	7.2
9'9"	117	0.3812	7.7	0.3710	7.9	0.3393	0.3982	7.4
10'0"	120	0.3728	7.9	0.3631	8.1	0.3323	0.3890	7.5
10'3"	123	0.3648	8.0	0.3556	8.3	0.3255	0.3802	7.7
10'6"	126	0.3571	8.2	0.3483	8.4	0.3189	0.3718	7.9
10'9"	129	0.3497	8.4	0.3414	8.6	0.3126	0.3637	8.1
11'0"	132	0.3427	8.6	0.3347	8.8	0.3066	0.3560	8.2
11'3"	135	0.3359	8.7	0.3282	8.9	0.3008	0.3486	8.4
11'6"	138	0.3293	8.9	0.3220	9.1	0.2951	0.3415	8.6
11'9"	141	0.3230	9.1	0.3160	9.3	0.2897	0.3347	8.8
12'0"	144	0.3170	9.3	0.3102	9.5	0.2845	0.3282	8.9
12'3"	147	0.3111	9.4	0.3047	9.6	0.2795	0.3219	9.1
12'6"	150	0.3055	9.6	0.2993	9.8	0.2746	0.3158	9.3
12'9"	153	0.3001	9.8	0.2941	10.0	0.2699	0.3100	9.5
13'0"	156	0.2948	10.0	0.2891	10.2	0.2653	0.3044	9.6
13'3"	159	0.2897	10.1	0.2842	10.3	0.2609	0.2989	9.8

TRACK RADIUS								
DOOR HEIGHT		12 INCH		15 INCH			LOW HEADROOM	
(FT)	(IN)	MULTI (IN./TURNS)	TURNS ON SPRING	MULTI (IN./TURNS)	TURNS ON SPRING	PITCH FACTOR	MULTI (IN./TURNS)	TURNS ON SPRING
13'6''	162	0.2848	10.3	0.2795	10.5	0.2566	0.2937	10.0
13'9''	165	0.2801	10.5	0.2750	10.7	0.2525	0.2886	10.2
14'0''	168	0.2755	10.7	0.2706	10.9	0.2485	0.2838	10.3
14'3''	171	0.2711	10.8	0.2663	11.0	0.2446	0.2790	10.5
14'6''	174	0.2668	11.0	0.2622	11.2	0.2409	0.2745	10.7
14'9''	177	0.2626	11.2	0.2582	11.4	0.2372	0.2700	10.9
15'0''	180	0.2586	11.4	0.2543	11.5	0.2337	0.2658	11.0
15'3''	183	0.2547	11.5	0.2505	11.7	0.2303	0.2616	11.2
15'6''	186	0.2509	11.7	0.2468	11.9	0.2269	0.2576	11.4
15'9''	189	0.2472	11.9	0.2433	12.1	0.2237	0.2537	11.6
16'0''	192	0.2436	12.1	0.2398	12.2	0.2205	0.2499	11.7
16'3''	195	0.2401	12.2	0.2365	12.4	0.2174	0.2462	11.9
16'6''	198	0.2367	12.4	0.2332	12.6	0.2145	0.2427	12.1
16'9''	201	0.2334	12.6	0.2300	12.8	0.2116	0.2392	12.3
17'0''	204	0.2302	12.8	0.2269	12.9	0.2087	0.2358	12.4
17'3''	207	0.2271	12.9	0.2239	13.1	0.2060	0.2326	12.6
17'6''	210	0.2241	13.1	0.2209	13.3	0.2033	0.2294	12.8
17'9''	213	0.2212	13.3	0.2181	13.5	0.2007	0.2263	13.0
18'0''	216	0.2183	13.5	0.2153	13.6	0.1981	0.2233	13.2
18'3''	219	0.2155	13.6	0.2126	13.8	0.1956	0.2203	13.3
18'6''	222	0.2127	13.8	0.2099	14.0	0.1932	0.2175	13.5
18'9''	225	0.2101	14.0	0.2073	14.2	0.1909	0.2147	13.7
19'0''	228	0.2075	14.2	0.2048	14.3	0.1885	0.2120	13.9
19'3''	231	0.2049	14.3	0.2023	14.5	0.1863	0.2093	14.0

D800-384

MULTIPLIER FOR STANDARD-LIFT DRUM

TRACK RADIUS								
DOOR HEIGHT		12 INCH		15 INCH			LOW HEADROOM	
(FT)	(IN)	MULTI (IN./TURNS)	TURNS ON SPRING	MULTI (IN./TURNS)	TURNS ON SPRING	PITCH FACTOR	MULTI (IN./TURNS)	TURNS ON SPRING
6'0"	72	1.2637	3.4	1.2018	3.6	1.1343	1.3668	3.2
6'3"	75	1.2242	3.5	1.1672	3.7	1.1024	1.3192	3.3
6'6"	78	1.1870	3.6	1.1342	3.8	1.0719	1.2748	3.4
6'9"	81	1.1518	3.7	1.1029	3.9	1.0429	1.2332	3.5
7'0"	84	1.1185	3.9	1.0730	4.0	1.0152	1.1943	3.6
7'3"	87	1.0870	4.0	1.0446	4.1	0.9888	1.1576	3.7
7'6"	90	1.0571	4.1	1.0175	4.2	0.9635	1.1231	3.8
7'9"	93	1.0288	4.2	0.9917	4.3	0.9395	1.0906	4.0
8'0"	96	1.0019	4.3	0.9671	4.5	0.9165	1.0599	4.1
8'3"	99	0.9763	4.4	0.9436	4.6	0.8945	1.0308	4.2
8'6"	102	0.9519	4.5	0.9211	4.7	0.8735	1.0033	4.3
8'9"	105	0.9287	4.6	0.8996	4.8	0.8534	0.9772	4.4
9'0"	108	0.9066	4.8	0.8791	4.9	0.8341	0.9524	4.5
9'3"	111	0.8855	4.9	0.8594	5.0	0.8157	0.9289	4.6
9'6"	114	0.8653	5.0	0.8406	5.1	0.7980	0.9064	4.8
9'9"	117	0.8460	5.1	0.8225	5.2	0.7810	0.8850	4.9
10'0"	120	0.8275	5.2	0.8052	5.4	0.7647	0.8646	5.0
10'3"	123	0.8098	5.3	0.7886	5.5	0.7491	0.8451	5.1
10'6"	126	0.7928	5.4	0.7726	5.6	0.7340	0.8265	5.2
10'9"	129	0.7765	5.6	0.7572	5.7	0.7196	0.8086	5.3
11'0"	132	0.7609	5.7	0.7424	5.8	0.7056	0.7915	5.4
11'3"	135	0.7458	5.8	0.7282	5.9	0.6922	0.7751	5.6
11'6"	138	0.7313	5.9	0.7145	6.0	0.6793	0.7594	5.7
11'9"	141	0.7174	6.0	0.7013	6.1	0.6668	0.7443	5.8
12'0"	144	0.7040	6.1	0.6885	6.3	0.6548	0.7298	5.9
12'3"	147	0.6911	6.2	0.6762	6.4	0.6432	0.7158	6.0
12'6"	150	0.6786	6.4	0.6644	6.5	0.6320	0.7024	6.1
12'9"	153	0.6666	6.5	0.6529	6.6	0.6211	0.6894	6.3
13'0"	156	0.6550	6.6	0.6418	6.7	0.6107	0.6769	6.4
13'3"	159	0.6438	6.7	0.6311	6.8	0.6005	0.6649	6.5
13'6"	162	0.6329	6.8	0.6207	6.9	0.5907	0.6533	6.6
13'9"	165	0.6224	6.9	0.6106	7.1	0.5812	0.6421	6.7
14'0"	168	0.6123	7.0	0.6009	7.2	0.5720	0.6312	6.8
14'3"	171	0.6024	7.2	0.5915	7.3	0.5631	0.6207	6.9
14'6"	174	0.5929	7.3	0.5823	7.4	0.5544	0.6106	7.1
14'9"	177	0.5837	7.4	0.5735	7.5	0.5460	0.6008	7.2

TRACK RADIUS								
DOOR HEIGHT		12 INCH		15 INCH			LOW HEADROOM	
(FT)	(IN)	MULTI (IN./TURNS)	TURNS ON SPRING	MULTI (IN./TURNS)	TURNS ON SPRING	PITCH FACTOR	MULTI (IN./TURNS)	TURNS ON SPRING
15'0"	180	0.5748	7.5	0.5649	7.6	0.5379	0.5913	7.3
15'3"	183	0.5661	7.6	0.5565	7.7	0.5299	0.5820	7.4
15'6"	186	0.5577	7.7	0.5484	7.9	0.5223	0.5731	7.5
15'9"	189	0.5495	7.8	0.5405	8.0	0.5148	0.5644	7.6
16'0"	192	0.5415	8.0	0.5328	8.1	0.5075	0.5560	7.8
16'3"	195	0.5338	8.1	0.5254	8.2	0.5005	0.5479	7.9
16'6"	198	0.5263	8.2	0.5181	8.3	0.4936	0.5400	8.0
16'9"	201	0.5190	8.3	0.5111	8.4	0.4869	0.5323	8.1
17'0"	204	0.5119	8.4	0.5042	8.6	0.4804	0.5248	8.2
17'3"	207	0.5050	8.5	0.4975	8.7	0.4741	0.5175	8.3
17'6"	210	0.4983	8.7	0.4910	8.8	0.4679	0.5104	8.4
17'9"	213	0.4918	8.8	0.4847	8.9	0.4619	0.5035	8.6
18'0"	216	0.4854	8.9	0.4785	9.0	0.4560	0.4968	8.7
18'3"	219	0.4792	9.0	0.4725	9.1	0.4503	0.4903	8.8
18'6"	222	0.4731	9.1	0.4666	9.2	0.4447	0.4840	8.9
18'9"	225	0.4672	9.2	0.4609	9.4	0.4393	0.4778	9.0
19'0"	228	0.4614	9.3	0.4553	9.5	0.4340	0.4717	9.1
19'3"	231	0.4558	9.5	0.4498	9.6	0.4288	0.4658	9.3
19'6"	234	0.4503	9.6	0.4445	9.7	0.4237	0.4601	9.4
19'9"	237	0.4450	9.7	0.4393	9.8	0.4187	0.4545	9.5
20'0"	240	0.4397	9.8	0.4342	9.9	0.4139	0.4490	9.6
20'3"	243	0.4346	9.9	0.4292	10.0	0.4092	0.4437	9.7
20'6"	246	0.4296	10.0	0.4243	10.2	0.4046	0.4385	9.8
20'9"	249	0.4247	10.2	0.4196	10.3	0.4001	0.4334	10.0
21'0"	252	0.4200	10.3	0.4149	10.4	0.3956	0.4284	10.1
21'3"	255	0.4153	10.4	0.4104	10.5	0.3913	0.4235	10.2
21'6"	258	0.4107	10.5	0.4059	10.6	0.3871	0.4188	10.3
21'9"	261	0.4063	10.6	0.4016	10.7	0.3829	0.4141	10.4
22'0"	264	0.4019	10.7	0.3973	10.9	0.3789	0.4096	10.5
22'3"	267	0.3976	10.8	0.3931	11.0	0.3749	0.4051	10.6
22'6"	270	0.3934	11.0	0.3890	11.1	0.3710	0.4008	10.8
22'9"	273	0.3893	11.1	0.3850	11.2	0.3672	0.3965	10.9
23'0"	276	0.3853	11.2	0.3811	11.3	0.3635	0.3923	11.0
23'3"	279	0.3814	11.3	0.3773	11.4	0.3598	0.3883	11.1
23'6"	282	0.3775	11.4	0.3735	11.5	0.3563	0.3843	11.2
23'9"	285	0.3738	11.5	0.3698	11.7	0.3528	0.3803	11.3
24'0"	288	0.3701	11.7	0.3662	11.8	0.3493	0.3765	11.5

D800-384 (CONTINUED)

MULTIPLIER FOR STANDARD-LIFT DRUM

TRACK RADIUS								
DOOR HEIGHT		12 INCH		15 INCH			LOW HEADROOM	
(FT)	(IN)	MULTI (IN./TURNS)	TURNS ON SPRING	MULTI (IN./TURNS)	TURNS ON SPRING	PITCH FACTOR	MULTI (IN./TURNS)	TURNS ON SPRING
24'3"	291	0.3664	11.8	0.3626	11.9	0.3459	0.3727	11.6
24'6"	294	0.3629	11.9	0.3591	12.0	0.3426	0.3690	11.7
24'9"	297	0.3594	12.0	0.3557	12.1	0.3394	0.3654	11.8
25'0"	300	0.3559	12.1	0.3524	12.2	0.3362	0.3619	11.9
25'3"	303	0.3526	12.2	0.3491	12.4	0.3330	0.3584	12.0
25'6"	306	0.3493	12.3	0.3459	12.5	0.3300	0.3550	12.1
25'9"	309	0.3460	12.5	0.3427	12.6	0.3270	0.3516	12.3
26'0"	312	0.3429	12.6	0.3396	12.7	0.3240	0.3484	12.4
26'3"	315	0.3397	12.7	0.3365	12.8	0.3211	0.3451	12.5
26'6"	318	0.3367	12.8	0.3335	12.9	0.3182	0.3420	12.6
26'9"	321	0.3337	12.9	0.3306	13.0	0.3154	0.3389	12.7
27'0"	324	0.3307	13.0	0.3277	13.2	0.3127	0.3358	12.8
27'3"	327	0.3278	13.2	0.3248	13.3	0.3100	0.3328	13.0
27'6"	330	0.3250	13.3	0.3220	13.4	0.3073	0.3299	13.1
27'9"	333	0.3222	13.4	0.3193	13.5	0.3047	0.3270	13.2
28'0"	336	0.3194	13.5	0.3166	13.6	0.3021	0.3241	13.3
28'3"	339	0.3167	13.6	0.3139	13.7	0.2996	0.3213	13.4
28'6"	342	0.3140	13.7	0.3113	13.9	0.2971	0.3186	13.5
28'9"	345	0.3114	13.8	0.3087	14.0	0.2946	0.3159	13.7
29'0"	348	0.3088	14.0	0.3062	14.1	0.2922	0.3132	13.8
29'3"	351	0.3063	14.1	0.3037	14.2	0.2898	0.3106	13.9
29'6"	354	0.3038	14.2	0.3012	14.3	0.2875	0.3081	14.0
29'9"	357	0.3013	14.3	0.2988	14.4	0.2852	0.3055	14.1
30'0"	360	0.2989	14.4	0.2965	14.5	0.2830	0.3031	14.2
30'3"	363	0.2966	14.5	0.2941	14.7	0.2807	0.3006	14.3
30'6"	366	0.2942	14.7	0.2918	14.8	0.2785	0.2982	14.5
30'9"	369	0.2919	14.8	0.2896	14.9	0.2764	0.2958	14.6
31'0"	372	0.2896	14.9	0.2873	15.0	0.2743	0.2935	14.7
31'3"	375	0.2874	15.0	0.2851	15.1	0.2722	0.2912	14.8
31'6"	378	0.2852	15.1	0.2830	15.2	0.2701	0.2890	14.9
31'9"	381	0.2831	15.2	0.2808	15.4	0.2681	0.2867	15.0
32'0"	384	0.2809	15.4	0.2787	15.5	0.2661	0.2845	15.2
32'3"	387	0.2788	15.5	0.2767	15.6	0.2641	0.2824	15.3
32'5"	389	0.2774	15.5	0.2753	15.7	0.2628	0.2810	15.3