ZERO BALANCE POINT: Over 20% | Between 10% and 20% | Under 10%

204"			210"			216"			222"			228"		
17'0"			17'6"			18'0"			18'6"			19'0"		
MULTI	TURN	PITCH FACTOR	MULTI	TURN	PITCH FACTOR	MULTI	TURN	PITCH FACTOR	MULTI	TURN	PITCH FACTOR	MULTI	TURN	PITCH FACTOR
0,5010	8,2	0,5010	0,4873	8,5	0,4873	0,4743	8,7	0,4743	0,4621	8,9	0,4621	0,4504	9,2	0,4504
0,4979	8,4	0,4933	0,4845	8,6	0,4800	0,4718	8,8	0,4675	0,4598	9,0	0,4556	0,4484	9,3	0,4442
0,4948	8,5	0,4855	0,4817	8,7	0,4727	0,4693	8,9	0,4606	0,4575	9,2	0,4490	0,4463	9,4	0,4381
0,4917	8,6	0,4778	0,4790	8,8	0,4655	0,4668	9,1	0,4537	0,4553	9,3	0,4425	0,4443	9,5	0,4319
0,4887	8,7	0,4701	0,4762	9,0	0,4582	0,4643	9,2	0,4468	0,4531	9,4	0,4360	0,4423	9,6	0,4257
0,4857	8,9	0,4624	0,4735	9,1	0,4509	0,4619	9,3	0,4400	0,4508	9,5	0,4295	0,4403	9,8	0,4196
0,4827	9,0	0,4547	0,4708	9,2	0,4436	0,4594	9,4	0,4331	0,4486	9,7	0,4230	0,4383	9,9	0,4134
0,4797	9,1	0,4470	0,4681	9,3	0,4364	0,4570	9,6	0,4262	0,4464	9,8	0,4165	0,4363	10,0	0,4072
0,4767	9,2	0,4393	0,4654	9,5	0,4291	0,4546	9,7	0,4193	0,4443	9,9	0,4100	0,4344	10,1	0,4010
0,4737	9,4	0,4316	0,4627	9,6	0,4218	0,4522	9,8	0,4125	0,4421	10,0	0,4035	0,4324	10,3	0,3949
0,4708	9,5	0,4239	0,4601	9,7	0,4146	0,4498	9,9	0,4056	0,4399	10,2	0,3970	0,4304	10,4	0,3887
0,4678	9,6	0,4162	0,4574	9,9	0,4073	0,4474	10,1	0,3987	0,4377	10,3	0,3905	0,4285	10,5	0,3825
0,4649	9,8	0,4085	0,4547	10,0	0,4000	0,4450	10,2	0,3918	0,4356	10,4	0,3840	0,4266	10,6	0,3764
0,4620	9,9	0,4008	0,4521	10,1	0,3927	0,4426	10,3	0,3850	0,4334	10,5	0,3775	0,4246	10,8	0,3702
0,4591	10,0	0,3931	0,4495	10,2	0,3855	0,4402	10,5	0,3781	0,4313	10,7	0,3710	0,4227	10,9	0,3640
0,4561	10,2	0,3854	0,4468	10,4	0,3782	0,4379	10,6	0,3712	0,4292	10,8	0,3644	0,4208	11,0	0,3579
0,4532	10,3	0,3776	0,4442	10,5	0,3709	0,4355	10,7	0,3643	0,4270	10,9	0,3579	0,4189	11,1	0,3517
0,4503	10,4	0,3699	0,4416	10,6	0,3636	0,4331	10,9	0,3575	0,4249	11,1	0,3514	0,4169	11,3	0,3455
0,4474	10,6	0,3622	0,4390	10,8	0,3564	0,4307	11,0	0,3506	0,4228	11,2	0,3449	0,4150	11,4	0,3393
0,4445	10,7	0,3545	0,4363	10,9	0,3491	0,4284	11,1	0,3437	0,4206	11,3	0,3384	0,4131	11,5	0,3332
0,4416	10,9	0,3468	0,4337	11,1	0,3418	0,4260	11,3	0,3369	0,4185	11,5	0,3319	0,4112	11,7	0,3270
0,4387	11,0	0,3391	0,4311	11,2	0,3346	0,4237	11,4	0,3300	0,4164	11,6	0,3254	0,4093	11,8	0,3208
0,4358	11,1	0,3314	0,4285	11,3	0,3273	0,4213	11,5	0,3231	0,4143	11,7	0,3189	0,4074	11,9	0,3147
0,4328	11,3	0,3237	0,4258	11,5	0,3200	0,4189	11,7	0,3162	0,4121	11,9	0,3124	0,4054	12,1	0,3085
0,4299	11,4	0,3160	0,4232	11,6	0,3127	0,4166	11,8	0,3094	0,4100	12,0	0,3059	0,4035	12,2	0,3023
0,4270	11,6	0,3083	0,4206	11,8	0,3055	0,4142	11,9	0,3025	0,4079	12,1	0,2994	0,4016	12,3	0,2962
0,4241	11,7	0,3006	0,4179	11,9	0,2982	0,4118	12,1	0,2956	0,4057	12,3	0,2929	0,3997	12,5	0,2900
0,4211	11,9	0,2929	0,4153	12,1	0,2909	0,4094	12,2	0,2887	0,4036	12,4	0,2863	0,3978	12,6	0,2838
0,4182	12,0	0,2852	0,4126	12,2	0,2836	0,4070	12,4	0,2819	0,4014	12,5	0,2798	0,3958	12,7	0,2776
0,4152	12,2	0,2775	0,4100	12,4	0,2764	0,4047	12,5	0,2750	0,3993	12,7	0,2733	0,3939	12,9	0,2715
0,4122	12,4	0,2697	0,4073	12,5	0,2691	0,4023	12,7	0,2681	0,3971	12,8	0,2668	0,3920	13,0	0,2653
0,4093	12,5	0,2620	0,4046	12,7	0,2618	0,3998	12,8	0,2612	0,3950	13,0	0,2603	0,3900	13,1	0,2591
0,4063	12,7	0,2543	0,4019	12,8	0,2546	0,3974	13,0	0,2544	0,3928	13,1	0,2538	0,3881	13,3	0,2530
0,4033	12,9	0,2466	0,3993	13,0	0,2473	0,3950	13,1	0,2475	0,3906	13,3	0,2473	0,3861	13,4	0,2468
0,4003	13,0	0,2389	0,3965	13,1	0,2400	0,3926	13,3	0,2406	0,3884	13,4	0,2408	0,3842	13,6	0,2406
0,3973	13,2	0,2312	0,3938	13,3	0,2327	0,3901	13,4	0,2337	0,3862	13,6	0,2343	0,3822	13,7	0,2345
0,3942	13,4	0,2235	0,3911	13,5	0,2255	0,3877	13,6	0,2269	0,3840	13,7	0,2278	0,3802	13,9	0,2283
0,3912	13,5	0,2158	0,3884	13,6	0,2182	0,3852	13,8	0,2200	0,3818	13,9	0,2213	0,3782	14,0	0,2221
0,3881	13,7	0,2081	0,3856	13,8	0,2109	0,3827	13,9	0,2131	0,3796	14,0	0,2148	0,3762	14,2	0,2159
0,3850	13,9	0,2004	0,3828	14,0	0,2036	0,3803	14,1	0,2062	0,3774	14,2	0,2083	0,3742	14,3	0,2098
0,3819	14,1	0,1927	0,3800	14,2	0,1964	0,3778	14,2	0,1994	0,3751	14,3	0,2017	0,3722	14,5	0,2036

D800-120

MULTIPLIER FOR HIGH-LIFT DRUM

			234"			240"			246"			252"		
			19'6"			20'0"			20'6"			21'0"		
HI-LIFT (INCH.)	H.M.A.	REV OF SPRIRAL	MULTI	TURN	PITCH FACTOR	MULTI	TURN	PITCH FACTOR	MULTI	TURN	PITCH FACTOR	MULTI	TURN	PITCH FACTOR
0	4,1250	0,0000	0,4393	9,4	0,4393	0,4288	9,6	0,4288	0,4187	9,9	0,4187	0,4091	10,1	0,4091
3	4,1610	0,1152	0,4375	9,5	0,4335	0,4271	9,7	0,4232	0,4172	10,0	0,4134	0,4078	10,2	0,4041
6	4,1967	0,2295	0,4356	9,6	0,4276	0,4255	9,9	0,4176	0,4157	10,1	0,4081	0,4065	10,3	0,3990
9	4,2321	0,3428	0,4338	9,8	0,4217	0,4238	10,0	0,4121	0,4143	10,2	0,4028	0,4052	10,4	0,3940
12	4,2672	0,4551	0,4320	9,9	0,4159	0,4222	10,1	0,4065	0,4128	10,3	0,3975	0,4039	10,6	0,3889
15	4,3021	0,5666	0,4302	10,0	0,4100	0,4206	10,2	0,4009	0,4114	10,5	0,3922	0,4026	10,7	0,3838
18	4,3366	0,6771	0,4284	10,1	0,4042	0,4190	10,4	0,3954	0,4099	10,6	0,3869	0,4013	10,8	0,3788
21	4,3709	0,7868	0,4267	10,2	0,3983	0,4174	10,5	0,3898	0,4085	10,7	0,3816	0,4000	10,9	0,3737
24	4,4049	0,8956	0,4249	10,4	0,3925	0,4158	10,6	0,3842	0,4071	10,8	0,3763	0,3987	11,0	0,3687
27	4,4386	1,0036	0,4231	10,5	0,3866	0,4142	10,7	0,3786	0,4057	10,9	0,3710	0,3975	11,2	0,3636
30	4,4721	1,1108	0,4214	10,6	0,3807	0,4126	10,8	0,3731	0,4043	11,1	0,3657	0,3962	11,3	0,3586
33	4,5054	1,2171	0,4196	10,7	0,3749	0,4111	11,0	0,3675	0,4029	11,2	0,3604	0,3949	11,4	0,3535
36	4,5383	1,3227	0,4179	10,9	0,3690	0,4095	11,1	0,3619	0,4015	11,3	0,3551	0,3937	11,5	0,3485
39	4,5711	1,4275	0,4161	11,0	0,3632	0,4080	11,2	0,3564	0,4001	11,4	0,3498	0,3924	11,6	0,3434
42	4,6036	1,5316	0,4144	11,1	0,3573	0,4064	11,3	0,3508	0,3987	11,5	0,3445	0,3912	11,8	0,3384
45	4,6359	1,6350	0,4127	11,2	0,3515	0,4048	11,5	0,3452	0,3973	11,7	0,3392	0,3900	11,9	0,3333
48	4,6680	1,7376	0,4109	11,4	0,3456	0,4033	11,6	0,3397	0,3959	11,8	0,3339	0,3887	12,0	0,3283
51	4,6999	1,8396	0,4092	11,5	0,3397	0,4017	11,7	0,3341	0,3945	11,9	0,3286	0,3875	12,1	0,3232
54	4,7315	1,9408	0,4075	11,6	0,3339	0,4002	11,8	0,3285	0,3931	12,0	0,3233	0,3862	12,3	0,3182
57	4,7629	2,0414	0,4058	11,7	0,3280	0,3987	11,9	0,3230	0,3917	12,2	0,3180	0,3850	12,4	0,3131
60	4,7942	2,1413	0,4041	11,9	0,3222	0,3971	12,1	0,3174	0,3903	12,3	0,3127	0,3838	12,5	0,3081
63	4,8252	2,2406	0,4023	12,0	0,3163	0,3956	12,2	0,3118	0,3890	12,4	0,3074	0,3825	12,6	0,3030
66	4,8560	2,3392	0,4006	12,1	0,3105	0,3940	12,3	0,3063	0,3876	12,5	0,3021	0,3813	12,7	0,2980
69	4,8866	2,4372	0,3989	12,3	0,3046	0,3925	12,5	0,3007	0,3862	12,7	0,2968	0,3801	12,9	0,2929
72	4,9171	2,5346	0,3972	12,4	0,2987	0,3909	12,6	0,2951	0,3848	12,8	0,2915	0,3788	13,0	0,2879
75	4,9473	2,6314	0,3954	12,5	0,2929	0,3894	12,7	0,2896	0,3834	12,9	0,2862	0,3776	13,1	0,2828
78	4,9774	2,7277	0,3937	12,6	0,2870	0,3878	12,8	0,2840	0,3821	13,0	0,2809	0,3764	13,2	0,2778
81	5,0073	2,8233	0,3920	12,8	0,2812	0,3863	13,0	0,2784	0,3807	13,2	0,2756	0,3751	13,3	0,2727
84	5,0370	2,9184	0,3903	12,9	0,2753	0,3847	13,1	0,2728	0,3793	13,3	0,2703	0,3739	13,5	0,2677
87	5,0665	3,0129	0,3885	13,0	0,2694	0,3832	13,2	0,2673	0,3779	13,4	0,2650	0,3726	13,6	0,2626
90	5,0959	3,1068	0,3868	13,2	0,2636	0,3816	13,4	0,2617	0,3765	13,5	0,2597	0,3714	13,7	0,2576
93	5,1251	3,2003	0,3850	13,3	0,2577	0,3801	13,5	0,2561	0,3751	13,7	0,2544	0,3702	13,8	0,2525
96	5,1541	3,2932	0,3833	13,4	0,2519	0,3785	13,6	0,2506	0,3737	13,8	0,2491	0,3689	14,0	0,2475
99	5,1830	3,3856	0,3815	13,6	0,2460	0,3769	13,8	0,2450	0,3723	13,9	0,2438	0,3677	14,1	0,2424
102	5,2117	3,4774	0,3798	13,7	0,2402	0,3754	13,9	0,2394	0,3709	14,1	0,2385	0,3664	14,2	0,2374
105	5,2402	3,5688	0,3780	13,9	0,2343	0,3738	14,0	0,2339	0,3695	14,2	0,2332	0,3652	14,4	0,2323
108	5,2686	3,6597	0,3763	14,0	0,2284	0,3722	14,2	0,2283	0,3681	14,3	0,2279	0,3639	14,5	0,2273
111	5,2969	3,7500	0,3745	14,1	0,2226	0,3706	14,3	0,2227	0,3666	14,4	0,2226	0,3626	14,6	0,2222
114	5,3250	3,8399	0,3727	14,3	0,2167	0,3690	14,4	0,2172	0,3652	14,6	0,2173	0,3614	14,7	0,2172
117	5,3529	3,9294	0,3709	14,4	0,2109	0,3674	14,6	0,2116	0,3638	14,7	0,2120	0,3601	14,9	0,2121
120	5,3807	4,0183	0,3691	14,6	0,2050	0,3658	14,7	0,2060	0,3624	14,8	0,2067	0,3588	15,0	0,2071

ZERO BALANCE POINT: Over 20% | Between 10% and 20% | Under 10%

258"			264"			270"			276"			282"		
21'6"			22'0"			22'6"			23'0"			23'6"		
MULTI	TURN	PITCH FACTOR	MULTI	TURN	PITCH FACTOR	MULTI	TURN	PITCH FACTOR	MULTI	TURN	PITCH FACTOR	MULTI	TURN	PITCH FACTOR
0,3999	10,3	0,3999	0,3912	10,5	0,3912	---	----	----	---	----	----	---	----	----
0,3988	10,4	0,3951	0,3901	10,7	0,3866	---	----	----	---	----	----	---	----	----
0,3976	10,6	0,3903	0,3891	10,8	0,3820	0,3809	11,0	0,3740	---	----	----	---	----	----
0,3964	10,7	0,3855	0,3880	10,9	0,3774	0,3800	11,1	0,3696	---	----	----	---	----	----
0,3953	10,8	0,3807	0,3870	11,0	0,3728	0,3791	11,3	0,3652	0,3715	11,5	0,3579	---	----	----
0,3941	10,9	0,3758	0,3860	11,1	0,3682	0,3782	11,4	0,3608	0,3707	11,6	0,3537	---	----	----
0,3930	11,0	0,3710	0,3850	11,3	0,3636	0,3773	11,5	0,3564	0,3699	11,7	0,3495	0,3629	12,0	0,3428
0,3918	11,2	0,3662	0,3840	11,4	0,3590	0,3764	11,6	0,3520	0,3692	11,8	0,3453	0,3622	12,1	0,3388
0,3907	11,3	0,3614	0,3830	11,5	0,3543	0,3755	11,7	0,3476	0,3684	12,0	0,3410	0,3615	12,2	0,3348
0,3896	11,4	0,3566	0,3820	11,6	0,3497	0,3747	11,8	0,3432	0,3676	12,1	0,3368	0,3608	12,3	0,3307
0,3884	11,5	0,3517	0,3810	11,7	0,3451	0,3738	12,0	0,3388	0,3668	12,2	0,3326	0,3601	12,4	0,3267
0,3873	11,6	0,3469	0,3800	11,9	0,3405	0,3729	12,1	0,3344	0,3661	12,3	0,3284	0,3595	12,5	0,3227
0,3862	11,8	0,3421	0,3790	12,0	0,3359	0,3720	12,2	0,3300	0,3653	12,4	0,3242	0,3588	12,6	0,3186
0,3851	11,9	0,3373	0,3780	12,1	0,3313	0,3712	12,3	0,3256	0,3645	12,5	0,3200	0,3581	12,8	0,3146
0,3840	12,0	0,3325	0,3770	12,2	0,3267	0,3703	12,4	0,3212	0,3638	12,7	0,3158	0,3575	12,9	0,3106
0,3829	12,1	0,3277	0,3760	12,3	0,3221	0,3694	12,5	0,3168	0,3630	12,8	0,3116	0,3568	13,0	0,3065
0,3818	12,2	0,3228	0,3751	12,4	0,3175	0,3685	12,7	0,3124	0,3622	12,9	0,3074	0,3561	13,1	0,3025
0,3807	12,3	0,3180	0,3741	12,6	0,3129	0,3677	12,8	0,3080	0,3615	13,0	0,3032	0,3555	13,2	0,2985
0,3796	12,5	0,3132	0,3731	12,7	0,3083	0,3668	12,9	0,3036	0,3607	13,1	0,2989	0,3548	13,3	0,2944
0,3785	12,6	0,3084	0,3721	12,8	0,3037	0,3660	13,0	0,2992	0,3600	13,2	0,2947	0,3542	13,4	0,2904
0,3774	12,7	0,3036	0,3711	12,9	0,2991	0,3651	13,1	0,2948	0,3592	13,3	0,2905	0,3535	13,6	0,2864
0,3763	12,8	0,2987	0,3702	13,0	0,2945	0,3642	13,2	0,2904	0,3585	13,5	0,2863	0,3528	13,7	0,2823
0,3752	12,9	0,2939	0,3692	13,2	0,2899	0,3634	13,4	0,2860	0,3577	13,6	0,2821	0,3522	13,8	0,2783
0,3741	13,1	0,2891	0,3682	13,3	0,2853	0,3625	13,5	0,2816	0,3570	13,7	0,2779	0,3515	13,9	0,2743
0,3730	13,2	0,2843	0,3673	13,4	0,2807	0,3617	13,6	0,2772	0,3562	13,8	0,2737	0,3509	14,0	0,2702
0,3719	13,3	0,2795	0,3663	13,5	0,2761	0,3608	13,7	0,2728	0,3554	13,9	0,2695	0,3502	14,1	0,2662
0,3708	13,4	0,2747	0,3653	13,6	0,2715	0,3599	13,8	0,2684	0,3547	14,0	0,2653	0,3496	14,2	0,2622
0,3697	13,5	0,2698	0,3643	13,7	0,2669	0,3591	13,9	0,2640	0,3539	14,1	0,2610	0,3489	14,4	0,2581
0,3686	13,7	0,2650	0,3634	13,9	0,2623	0,3582	14,1	0,2596	0,3532	14,3	0,2568	0,3482	14,5	0,2541
0,3675	13,8	0,2602	0,3624	14,0	0,2577	0,3574	14,2	0,2552	0,3524	14,4	0,2526	0,3476	14,6	0,2501
0,3664	13,9	0,2554	0,3614	14,1	0,2531	0,3565	14,3	0,2508	0,3517	14,5	0,2484	0,3469	14,7	0,2460
0,3653	14,0	0,2506	0,3604	14,2	0,2485	0,3556	14,4	0,2464	0,3509	14,6	0,2442	0,3463	14,8	0,2420
0,3642	14,2	0,2457	0,3594	14,3	0,2439	0,3548	14,5	0,2420	0,3501	14,7	0,2400	0,3456	14,9	0,2380
0,3630	14,3	0,2409	0,3584	14,5	0,2393	0,3539	14,6	0,2376	0,3494	14,8	0,2358	0,3449	15,0	0,2339
0,3619	14,4	0,2361	0,3575	14,6	0,2347	0,3530	14,8	0,2332	0,3486	14,9	0,2316	0,3443	15,1	0,2299
0,3608	14,5	0,2313	0,3565	14,7	0,2301	0,3521	14,9	0,2288	0,3479	15,1	0,2274	0,3436	15,3	0,2259
0,3597	14,6	0,2265	0,3555	14,8	0,2255	0,3513	15,0	0,2244	0,3471	15,2	0,2232	0,3429	15,4	0,2218
0,3586	14,8	0,2216	0,3545	14,9	0,2209	0,3504	15,1	0,2200	0,3463	15,3	0,2189	0,3423	15,5	0,2178
0,3574	14,9	0,2168	0,3535	15,1	0,2163	0,3495	15,2	0,2156	0,3455	15,4	0,2147	0,3416	15,6	0,2138
0,3563	15,0	0,2120	0,3525	15,2	0,2117	0,3486	15,4	0,2112	0,3448	15,5	0,2105	0,3409	15,7	0,2097
0,3552	15,1	0,2072	0,3515	15,3	0,2071	0,3477	15,5	0,2068	0,3440	15,6	0,2063	0,3402	15,8	0,2057

D800-120

MULTIPLIER FOR HIGH-LIFT DRUM

			288"			294"			300"			306"		
			24'0"			24'6"			25'0"			25'6"		
HI-LIFT (INCH.)	H.M.A.	REV OF SPRIRAL	MULTI	TURN	PITCH FACTOR	MULTI	TURN	PITCH FACTOR	MULTI	TURN	PITCH FACTOR	MULTI	TURN	PITCH FACTOR
0	4,1300	0,0161	---	----	----	---	----	----	---	----	----	---	----	----
3	4,1300	0,0161	---	----	----	---	----	----	---	----	----	---	----	----
6	4,1300	0,0160	---	----	----	---	----	----	---	----	----	---	----	----
9	4,1300	0,0160	---	----	----	---	----	----	---	----	----	---	----	----
12	4,1300	0,0159	---	----	----	---	----	----	---	----	----	---	----	----
15	4,1300	0,0159	---	----	----	---	----	----	---	----	----	---	----	----
18	4,1299	0,0158	---	----	----	---	----	----	---	----	----	---	----	----
21	4,1299	0,0158	---	----	----	---	----	----	---	----	----	---	----	----
24	4,1299	0,0157	0,3548	12,4	0,3287	---	----	----	---	----	----	---	----	----
27	4,1299	0,0156	0,3543	12,5	0,3248	---	----	----	---	----	----	---	----	----
30	4,1299	0,0156	0,3537	12,6	0,3210	0,3474	12,9	0,3154	---	----	----	---	----	----
33	4,1299	0,0155	0,3531	12,8	0,3171	0,3469	13,0	0,3117	---	----	----	---	----	----
36	4,1298	0,0155	0,3525	12,9	0,3132	0,3465	13,1	0,3080	0,3406	13,3	0,3029	---	----	----
39	4,1298	0,0154	0,3519	13,0	0,3094	0,3460	13,2	0,3043	0,3402	13,4	0,2994	---	----	----
42	4,1298	0,0154	0,3514	13,1	0,3055	0,3455	13,3	0,3006	0,3397	13,6	0,2958	0,3342	13,8	0,2912
45	4,1298	0,0153	0,3508	13,2	0,3016	0,3450	13,4	0,2969	0,3393	13,7	0,2922	0,3339	13,9	0,2877
48	4,1298	0,0153	0,3502	13,3	0,2978	0,3445	13,6	0,2931	0,3389	13,8	0,2887	0,3335	14,0	0,2843
51	4,1298	0,0152	0,3497	13,4	0,2939	0,3440	13,7	0,2894	0,3385	13,9	0,2851	0,3332	14,1	0,2809
54	4,1297	0,0152	0,3491	13,6	0,2900	0,3435	13,8	0,2857	0,3381	14,0	0,2815	0,3328	14,2	0,2775
57	4,1297	0,0151	0,3485	13,7	0,2862	0,3430	13,9	0,2820	0,3377	14,1	0,2780	0,3325	14,3	0,2740
60	4,1297	0,0151	0,3479	13,8	0,2823	0,3425	14,0	0,2783	0,3373	14,2	0,2744	0,3322	14,4	0,2706
63	4,1297	0,0150	0,3474	13,9	0,2784	0,3421	14,1	0,2746	0,3369	14,3	0,2708	0,3318	14,5	0,2672
66	4,1297	0,0149	0,3468	14,0	0,2746	0,3416	14,2	0,2709	0,3365	14,4	0,2673	0,3315	14,6	0,2638
69	4,1297	0,0149	0,3462	14,1	0,2707	0,3411	14,3	0,2672	0,3360	14,5	0,2637	0,3311	14,8	0,2603
72	4,1296	0,0148	0,3457	14,2	0,2668	0,3406	14,4	0,2635	0,3356	14,6	0,2602	0,3308	14,9	0,2569
75	4,1296	0,0148	0,3451	14,3	0,2629	0,3401	14,5	0,2597	0,3352	14,8	0,2566	0,3305	15,0	0,2535
78	4,1296	0,0147	0,3445	14,4	0,2591	0,3396	14,7	0,2560	0,3348	14,9	0,2530	0,3301	15,1	0,2501
81	4,1296	0,0147	0,3440	14,6	0,2552	0,3391	14,8	0,2523	0,3344	15,0	0,2495	0,3298	15,2	0,2466
84	4,1296	0,0146	0,3434	14,7	0,2513	0,3386	14,9	0,2486	0,3340	15,1	0,2459	0,3294	15,3	0,2432
87	4,1296	0,0146	0,3428	14,8	0,2475	0,3382	15,0	0,2449	0,3336	15,2	0,2423	0,3291	15,4	0,2398
90	4,1295	0,0145	0,3423	14,9	0,2436	0,3377	15,1	0,2412	0,3332	15,3	0,2388	0,3288	15,5	0,2363
93	4,1295	0,0145	0,3417	15,0	0,2397	0,3372	15,2	0,2375	0,3328	15,4	0,2352	0,3284	15,6	0,2329
96	4,1295	0,0144	0,3411	15,1	0,2359	0,3367	15,3	0,2338	0,3323	15,5	0,2316	0,3281	15,7	0,2295
99	4,1295	0,0144	0,3405	15,2	0,2320	0,3362	15,4	0,2301	0,3319	15,6	0,2281	0,3277	15,8	0,2261
102	4,1295	0,0143	0,3400	15,3	0,2281	0,3357	15,5	0,2264	0,3315	15,7	0,2245	0,3274	15,9	0,2226
105	4,1295	0,0142	0,3394	15,4	0,2243	0,3352	15,6	0,2226	0,3311	15,8	0,2210	0,3270	16,0	0,2192
108	4,1294	0,0142	0,3388	15,6	0,2204	0,3347	15,7	0,2189	0,3307	15,9	0,2174	0,3267	16,1	0,2158
111	4,1294	0,0141	0,3382	15,7	0,2165	0,3342	15,8	0,2152	0,3303	16,0	0,2138	0,3264	16,2	0,2124
114	4,1294	0,0141	0,3376	15,8	0,2127	0,3337	16,0	0,2115	0,3298	16,1	0,2103	0,3260	16,3	0,2089
117	4,1294	0,0140	0,3371	15,9	0,2088	0,3332	16,1	0,2078	0,3294	16,2	0,2067	0,3257	16,4	0,2055
120	4,1294	0,0140	0,3365	16,0	0,2049	0,3327	16,2	0,2041	0,3290	16,4	0,2031	0,3253	16,5	0,2021

ZERO BALANCE POINT: Over 20% | Between 10% and 20% | Under 10%

312"			318"			324"			330"			336"		
26'0"			26'6"			27'0"			27'6"			28'0"		
MULTI	TURN	PITCH FACTOR	MULTI	TURN	PITCH FACTOR	MULTI	TURN	PITCH FACTOR	MULTI	TURN	PITCH FACTOR	MULTI	TURN	PITCH FACTOR
---	----	----	---	----	----	---	----	----	---	----	----	---	----	----
---	----	----	---	----	----	---	----	----	---	----	----	---	----	----
---	----	----	---	----	----	---	----	----	---	----	----	---	----	----
---	----	----	---	----	----	---	----	----	---	----	----	---	----	----
---	----	----	---	----	----	---	----	----	---	----	----	---	----	----
---	----	----	---	----	----	---	----	----	---	----	----	---	----	----
---	----	----	---	----	----	---	----	----	---	----	----	---	----	----
---	----	----	---	----	----	---	----	----	---	----	----	---	----	----
---	----	----	---	----	----	---	----	----	---	----	----	---	----	----
---	----	----	---	----	----	---	----	----	---	----	----	---	----	----
---	----	----	---	----	----	---	----	----	---	----	----	---	----	----
---	----	----	---	----	----	---	----	----	---	----	----	---	----	----
---	----	----	---	----	----	---	----	----	---	----	----	---	----	----
---	----	----	---	----	----	---	----	----	---	----	----	---	----	----
---	----	----	---	----	----	---	----	----	---	----	----	---	----	----
---	----	----	---	----	----	---	----	----	---	----	----	---	----	----
---	----	----	---	----	----	---	----	----	---	----	----	---	----	----
0,3283	14,2	0,2801	---	----	----	---	----	----	---	----	----	---	----	----
0,3280	14,3	0,2768	---	----	----	---	----	----	---	----	----	---	----	----
0,3277	14,4	0,2735	0,3228	14,7	0,2696	---	----	----	---	----	----	---	----	----
0,3275	14,5	0,2702	0,3226	14,8	0,2664	---	----	----	---	----	----	---	----	----
0,3272	14,7	0,2669	0,3224	14,9	0,2633	0,3176	15,1	0,2597	---	----	----	---	----	----
0,3269	14,8	0,2636	0,3221	15,0	0,2601	0,3175	15,2	0,2566	---	----	----	---	----	----
0,3266	14,9	0,2603	0,3219	15,1	0,2569	0,3173	15,3	0,2536	0,3129	15,5	0,2503	---	----	----
0,3264	15,0	0,2570	0,3217	15,2	0,2537	0,3172	15,4	0,2505	0,3127	15,6	0,2474	---	----	----
0,3261	15,1	0,2537	0,3215	15,3	0,2506	0,3170	15,5	0,2475	0,3126	15,7	0,2445	0,3084	15,9	0,2415
0,3258	15,2	0,2504	0,3213	15,4	0,2474	0,3169	15,6	0,2444	0,3125	15,8	0,2415	0,3083	16,0	0,2386
0,3255	15,3	0,2471	0,3211	15,5	0,2442	0,3167	15,7	0,2414	0,3124	15,9	0,2386	0,3083	16,1	0,2358
0,3253	15,4	0,2438	0,3209	15,6	0,2411	0,3165	15,8	0,2383	0,3123	16,0	0,2356	0,3082	16,2	0,2330
0,3250	15,5	0,2405	0,3206	15,7	0,2379	0,3164	15,9	0,2353	0,3122	16,1	0,2327	0,3081	16,3	0,2301
0,3247	15,6	0,2372	0,3204	15,8	0,2347	0,3162	16,0	0,2322	0,3121	16,2	0,2297	0,3081	16,4	0,2273
0,3244	15,7	0,2339	0,3202	15,9	0,2315	0,3161	16,1	0,2292	0,3120	16,3	0,2268	0,3080	16,5	0,2244
0,3242	15,8	0,2306	0,3200	16,0	0,2284	0,3159	16,2	0,2261	0,3119	16,4	0,2238	0,3080	16,6	0,2216
0,3239	15,9	0,2273	0,3198	16,1	0,2252	0,3157	16,3	0,2230	0,3118	16,5	0,2209	0,3079	16,7	0,2188
0,3236	16,0	0,2241	0,3196	16,2	0,2220	0,3156	16,4	0,2200	0,3117	16,6	0,2179	0,3078	16,8	0,2159
0,3233	16,1	0,2208	0,3193	16,3	0,2188	0,3154	16,5	0,2169	0,3116	16,7	0,2150	0,3078	16,9	0,2131
0,3231	16,2	0,2175	0,3191	16,4	0,2157	0,3153	16,6	0,2139	0,3114	16,8	0,2121	0,3077	17,0	0,2102
0,3228	16,3	0,2142	0,3189	16,5	0,2125	0,3151	16,7	0,2108	0,3113	16,9	0,2091	0,3076	17,1	0,2074
0,3225	16,4	0,2109	0,3187	16,6	0,2093	0,3149	16,8	0,2078	0,3112	17,0	0,2062	0,3076	17,2	0,2046
0,3222	16,5	0,2076	0,3185	16,7	0,2062	0,3148	16,9	0,2047	0,3111	17,1	0,2032	0,3075	17,3	0,2017
0,3219	16,6	0,2043	0,3182	16,8	0,2030	0,3146	17,0	0,2017	0,3110	17,2	0,2003	0,3075	17,4	0,1989
0,3216	16,7	0,2010	0,3180	16,9	0,1998	0,3144	17,1	0,1986	0,3109	17,3	0,1973	0,3074	17,5	0,1960

D800-120

MULTIPLIER FOR HIGH-LIFT DRUM

			342"			348"			354"			360"		
			28'6"			29'0"			29'6"			30'0"		
HI-LIFT (INCH.)	H.M.A.	REV OF SPRIRAL	MULTI	TURN	PITCH FACTOR	MULTI	TURN	PITCH FACTOR	MULTI	TURN	PITCH FACTOR	MULTI	TURN	PITCH FACTOR
0	4,1300	0,0161	---	----	----	---	----	----	---	----	----	---	----	----
3	4,1300	0,0161	---	----	----	---	----	----	---	----	----	---	----	----
6	4,1300	0,0160	---	----	----	---	----	----	---	----	----	---	----	----
9	4,1300	0,0160	---	----	----	---	----	----	---	----	----	---	----	----
12	4,1300	0,0159	---	----	----	---	----	----	---	----	----	---	----	----
15	4,1300	0,0159	---	----	----	---	----	----	---	----	----	---	----	----
18	4,1299	0,0158	---	----	----	---	----	----	---	----	----	---	----	----
21	4,1299	0,0158	---	----	----	---	----	----	---	----	----	---	----	----
24	4,1299	0,0157	---	----	----	---	----	----	---	----	----	---	----	----
27	4,1299	0,0156	---	----	----	---	----	----	---	----	----	---	----	----
30	4,1299	0,0156	---	----	----	---	----	----	---	----	----	---	----	----
33	4,1299	0,0155	---	----	----	---	----	----	---	----	----	---	----	----
36	4,1298	0,0155	---	----	----	---	----	----	---	----	----	---	----	----
39	4,1298	0,0154	---	----	----	---	----	----	---	----	----	---	----	----
42	4,1298	0,0154	---	----	----	---	----	----	---	----	----	---	----	----
45	4,1298	0,0153	---	----	----	---	----	----	---	----	----	---	----	----
48	4,1298	0,0153	---	----	----	---	----	----	---	----	----	---	----	----
51	4,1298	0,0152	---	----	----	---	----	----	---	----	----	---	----	----
54	4,1297	0,0152	---	----	----	---	----	----	---	----	----	---	----	----
57	4,1297	0,0151	---	----	----	---	----	----	---	----	----	---	----	----
60	4,1297	0,0151	---	----	----	---	----	----	---	----	----	---	----	----
63	4,1297	0,0150	---	----	----	---	----	----	---	----	----	---	----	----
66	4,1297	0,0149	---	----	----	---	----	----	---	----	----	---	----	----
69	4,1297	0,0149	---	----	----	---	----	----	---	----	----	---	----	----
72	4,1296	0,0148	---	----	----	---	----	----	---	----	----	---	----	----
75	4,1296	0,0148	---	----	----	---	----	----	---	----	----	---	----	----
78	4,1296	0,0147	0,3042	16,4	0,2331	---	----	----	---	----	----	---	----	----
81	4,1296	0,0147	0,3042	16,5	0,2303	---	----	----	---	----	----	---	----	----
84	4,1296	0,0146	0,3042	16,6	0,2276	0,3003	16,8	0,2251	---	----	----	---	----	----
87	4,1296	0,0146	0,3041	16,7	0,2249	0,3003	16,9	0,2225	---	----	----	---	----	----
90	4,1295	0,0145	0,3041	16,8	0,2221	0,3003	17,0	0,2198	0,2966	17,2	0,2176	---	----	----
93	4,1295	0,0145	0,3041	16,9	0,2194	0,3003	17,1	0,2172	0,2966	17,3	0,2150	---	----	----
96	4,1295	0,0144	0,3041	16,9	0,2166	0,3004	17,2	0,2145	0,2967	17,4	0,2124	0,2931	17,6	0,2104
99	4,1295	0,0144	0,3041	17,0	0,2139	0,3004	17,3	0,2119	0,2968	17,5	0,2099	0,2932	17,7	0,2079
102	4,1295	0,0143	0,3041	17,1	0,2111	0,3004	17,3	0,2092	0,2968	17,6	0,2073	0,2933	17,8	0,2054
105	4,1295	0,0142	0,3040	17,2	0,2084	0,3004	17,4	0,2066	0,2969	17,7	0,2048	0,2934	17,9	0,2029
108	4,1294	0,0142	0,3040	17,3	0,2057	0,3005	17,5	0,2039	0,2970	17,7	0,2022	0,2935	18,0	0,2005
111	4,1294	0,0141	0,3040	17,4	0,2029	0,3005	17,6	0,2013	0,2970	17,8	0,1996	0,2936	18,0	0,1980
114	4,1294	0,0141	0,3040	17,5	0,2002	0,3005	17,7	0,1986	0,2971	17,9	0,1971	0,2937	18,1	0,1955
117	4,1294	0,0140	0,3040	17,6	0,1974	0,3005	17,8	0,1960	0,2971	18,0	0,1945	0,2938	18,2	0,1930
120	4,1294	0,0140	0,3039	17,7	0,1947	0,3006	17,9	0,1933	0,2972	18,1	0,1920	0,2939	18,3	0,1906

ZERO BALANCE POINT: Over 20% | Between 10% and 20% | Under 10%

366"			372"			378"			384"		
30'6"			31'0"			31'6"			32'0"		
MULTI	TURN	PITCH FACTOR	MULTI	TURN	PITCH FACTOR	MULTI	TURN	PITCH FACTOR	MULTI	TURN	PITCH FACTOR
---	----	----	---	----	----	---	----	----	---	----	----

VERTICAL-LIFT DRUMS

VERTICAL-LIFT DOOR

FORMULAS

$$\text{Turns} = \frac{\text{HMA}}{\text{Mullitplier}}$$

IPPT = Multiplier X Weight

D850-132
(M216-3350)

D1100-206
(M280-5500)

D1350-336
(M340-8500)

The above illustrations are for reference only. Canimex can change the design of drums without notice.

PHYSICAL SPECIFICATIONS ON VERTICAL-LIFT DRUMS (IMPERIAL)

VIEW FROM SET SCREW SIDE

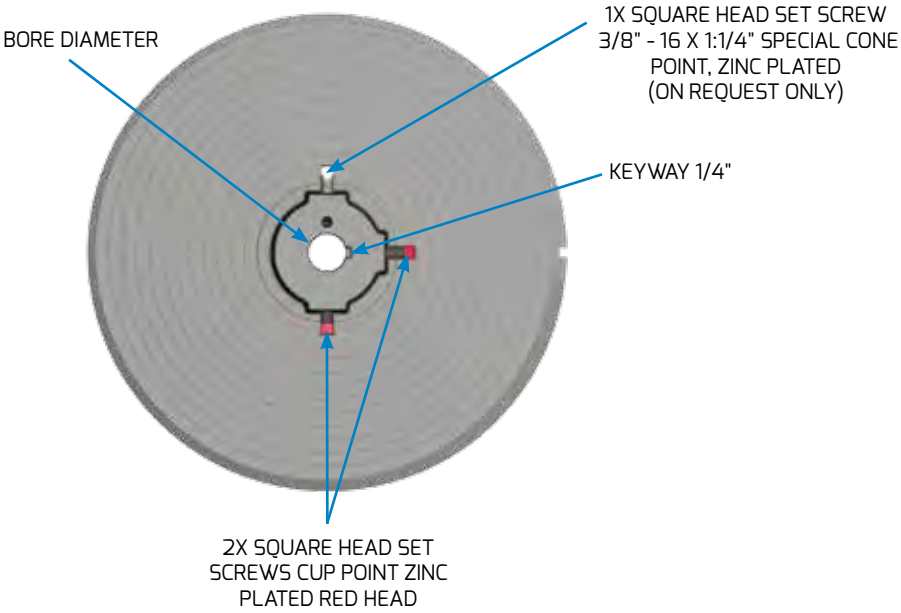

DRUM NAME	INACTIVE WRAPPING	DIMENSIONS						
VERTICAL-LIFT	NUMBER OF INACTIVE WRAPPING TURNS	BORE DIAMETER	BORE DIAMETER	MAXIMUM OUTSIDE DIAMETER	MAXIMUM WIDTH AT HUB	MAXIMUM CABLE DIAMETER	HIGH MOMENT ARM	FLAT MOMENT ARM
	Turns	1 in.	1:1/4 in.	in.	in.	in.	in.	in.
D850-132	1/2	X	X	8.63	3.33	3/16	4.156	1.344
D1100-216	1/2	X	X	10.88	4.29	3/16	5.281	1.344
D1350-336	1/2	X	X	13.45	6.75	1/4	6.438	1.375

PLEASE NOTE:

- Consult the Common Informations on Drums and Plugs section for the general notice.
- All data relates to Maximum Cable Diameter.
- All these drums must be used with a minimum of 1/2 turn of Inactive Wrapping for safety reasons.
- Cable end anchoring to the drum must meet DASMA 102.

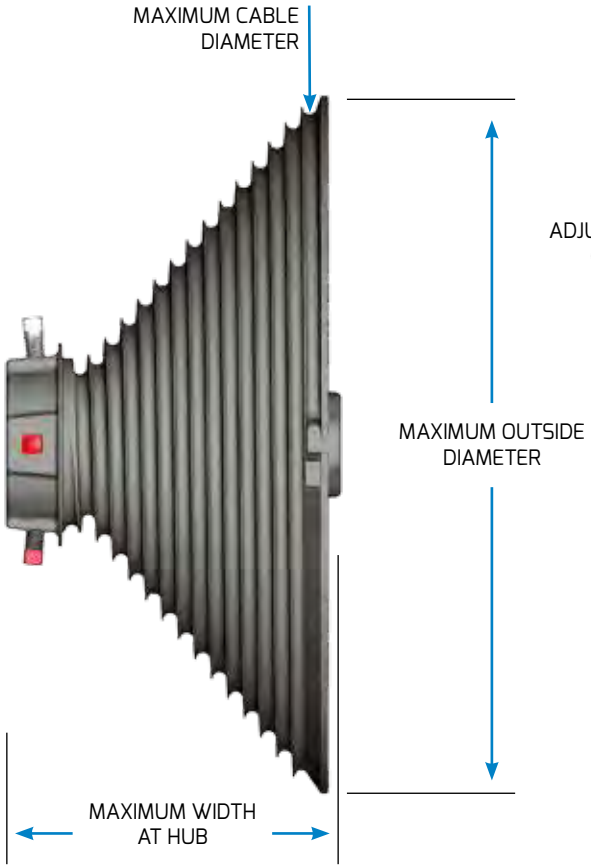

VIEW FROM CABLE ENTRY SIDE

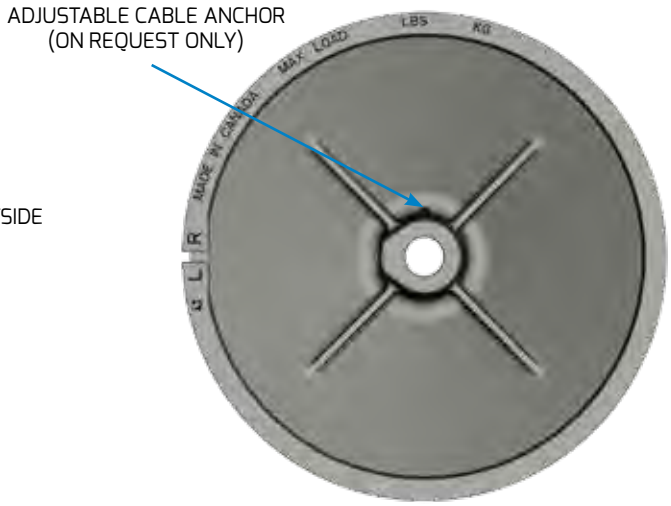

WRAPPING		MISCELLANEOUS			CABLE LENGHT RULE(1)	
MAX.DOOR HEIGHT	RATE OF RISE PER REVOLUTION	MAX. WEIGHT PER DRUM	APPROX. SHIPPING WEIGHT (WITH 2 SET SCREWS)	SQUARE HEAD SET SCREW IF PRE-INST.	DISTANCE TO ADD FOR BUTTONS ON CABLE	DISTANCE TO ADD FOR ADJUSTABLE CABLE ANCHOR
in.	in.	lb	lb	in.	in.	in.
129	0.375	425	2.2	3/8-16 x 1:1/4	143.75	156
218	0.375	660	4.0	3/8-16 x 1:1/4	235.25	250
331	0.375	1100	9.9	3/8-16 x 1:1/2	352.75	369

(1) Distance from cable attachment point on the door to shaft center line + " value on table" - door height.

- Recommended seating torque on set screws: 240 lb-in.
- Maximum torque on set screws: 300 lb-in except for third set screw anchoring where the maximum torque is 180 lb-in.
- IPPT: Multiplier X Door Weight.
- Drums must be assembled on a torsion shaft that meets Dasma 102. If drums are used with a solid shaft, a 3:3/4" bent key or 3" straight key must be assembled on the set screw side of the drum (except for D1350-336 that must be used with a 4:3/4" bent key or 4" straight key. Please refer to canimex drawing 20772-P1, 20994-P1 and 24657-P2 for shaft specifications and to technical document DT-020 for key insertion.
- Data for reference only. Please consult the FCUO drawing for the latest specifications.

PHYSICAL SPECIFICATIONS ON VERTICAL-LIFT DRUMS (METRIC)

VIEW FROM SET SCREW SIDE

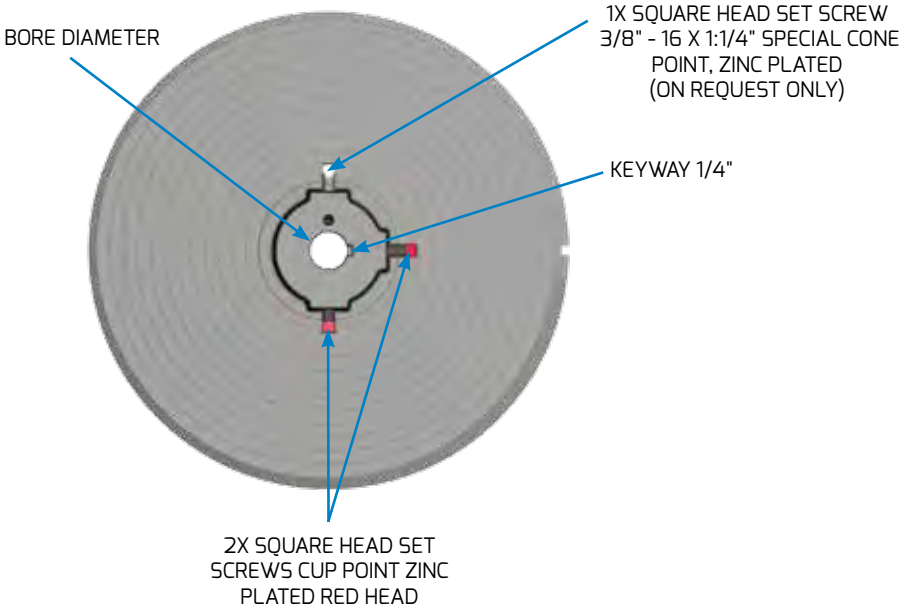

DRUM NAME	INACTIVE WRAPPING	DIMENSIONS						
VERTICAL-LIFT	NUMBER OF INACTIVE WRAPPING TURNS	BORE DIAMETER	BORE DIAMETER	MAXIMUM OUTSIDE DIAMETER	MAXIMUM WIDTH AT HUB	MAXIMUM CABLE DIAMETER	HIGH MOMENT ARM	FLAT MOMENT ARM
	Turns	25.4 mm	31.75 mm	mm	mm	mm	mm	mm
M216-3350	1/2	X	X	219.1	84.6	5	105.69	34.25
M280-5500	1/2	X	X	276.2	108.9	5	134.26	34.25
M340-8500	1/2	X	X	341.5	171.5	6	163.34	34.75

PLEASE NOTE:

- Consult the Common Informations on Drums and Plugs section for the general notice.
- All data relates to Maximum Cable Diameter.
- All these drums must be used with a minimum of 1/2 turn of Inactive Wrapping for safety reasons.
- Cable end anchoring to the drum must meet Dasma 102.

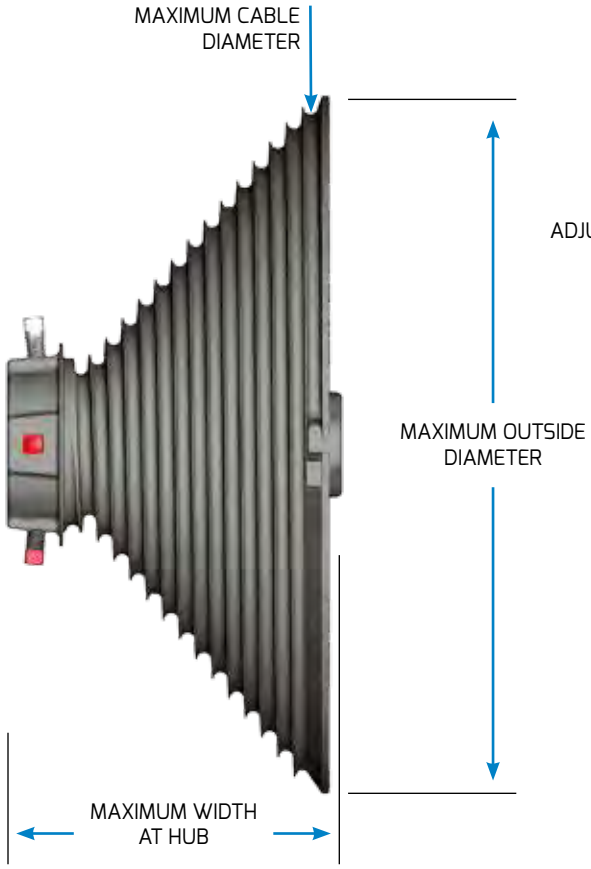

VIEW FROM CABLE ENTRY SIDE

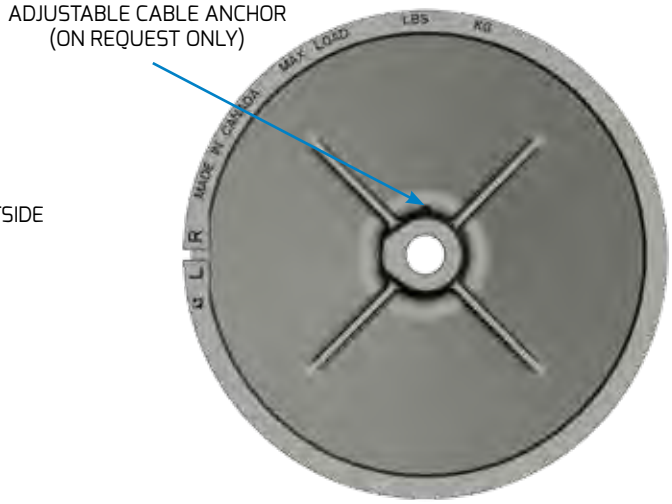

WRAPPING		MISCELLANEOUS			CABLE LENGHT RULE(1)	
MAX. DOOR HEIGHT	RATE OF RISE PER REVOLUTION	MAX. WEIGHT PER DRUM	APPROX. SHIPPING WEIGHT (WITH 2 SET SCREWS)	SQUARE HEAD SET SCREW IF PRE-INST.	DISTANCE TO ADD FOR BUTTONS ON CABLE	DISTANCE TO ADD FOR ADJUSTABLE CABLE ANCHOR
mm	mm	Kg	Kg	mm	mm	mm
3297	9.53	193	1.0	3/8-16 x 1:1/4	3665	3960
5558	9.53	300	1.8	3/8-16 x 1:1/4	6005	6350
8401	9.53	500	4.5	3/8-16 x 1:1/2	8946	9370

(1) Distance from cable attachment point on the door to shaft center line + " value on table" - door height.

- Recommended seating torque on set screws: 27 Nm.
- Maximum torque on set screws: 34 Nm except for third set screw anchoring where the maximum torque is 20 Nm.
- IPPT: Multiplier X Door Weight.
- Drums must be assembled on a torsion shaft that meets Dasma 102. If drums are used with a solid shaft, a 3:3/4" bent key or 3" straight key must be assembled on the set screw side of the drum (except for M340-8500 that must be used with a 4:3/4" bent key or 4" straight key. Please refer to canimex drawing 19478-P1, 19479-P1, 24191-P1, 24192-P1 and 19477-P1for shaft specifications and to technical document DT-020 for key insertion.
- Data for reference only. Please consult the FCUO drawing for the latest specifications.

D850-132
MULTIPLIER FOR VERTICAL-LIFT DRUM

DOOR HEIGHT		H.M.A	REV. OF DRUM	TURNS ON SPRING
(FT)	(IN)	(INCH)	(TURNS)	(TURNS)
0'0"	0	1,344	0,00	3,6
0'3"	3	1,471	0,34	3,9
0'6"	6	1,588	0,65	4,2
0'9"	9	1,697	0,94	4,5
1'0"	12	1,799	1,22	4,8
1'3"	15	1,896	1,47	5,1
1'6"	18	1,989	1,72	5,3
1'9"	21	2,077	1,95	5,5
2'0"	24	2,161	2,18	5,8
2'3"	27	2,242	2,40	6,0
2'6"	30	2,321	2,61	6,2
2'9"	33	2,397	2,81	6,4
3'0"	36	2,470	3,00	6,6
3'3"	39	2,542	3,19	6,8
3'6"	42	2,611	3,38	7,0
3'9"	45	2,679	3,56	7,1
4'0"	48	2,745	3,74	7,3
4'3"	51	2,810	3,91	7,5
4'6"	54	2,873	4,08	7,7
4'9"	57	2,934	4,24	7,8
5'0"	60	2,995	4,40	8,0
5'3"	63	3,054	4,56	8,1
5'6"	66	3,112	4,71	8,3
5'9"	69	3,169	4,87	8,5
6'0"	72	3,225	5,02	8,6
6'3"	75	3,280	5,16	8,7
6'6"	78	3,334	5,31	8,9
6'9"	81	3,387	5,45	9,0
7'0"	84	3,440	5,59	9,2
7'3"	87	3,492	5,73	9,3
7'6"	90	3,542	5,86	9,4
7'9"	93	3,593	6,00	9,6
8'0"	96	3,642	6,13	9,7
8'3"	99	3,691	6,26	9,8
8'6"	102	3,739	6,39	10,0
8'9"	105	3,787	6,51	10,1
9'0"	108	3,834	6,64	10,2
9'3"	111	3,880	6,76	10,3
9'6"	114	3,926	6,89	10,5
9'9"	117	3,971	7,01	10,6
10'0"	120	4,016	7,13	10,7
10'3"	123	4,061	7,24	10,8
10'6"	126	4,104	7,36	10,9
10'9"	129	4,148	7,48	11,1

D1100-216
MULTIPLIER FOR VERTICAL-LIFT DRUM

DOOR HEIGHT		H.M.A	REV. OF DRUM	TURNS ON SPRING
(FT)	(IN)	(INCH)	(TURNS)	(TURNS)
11'0"	132	4,191	7,59	11,2
11'3"	135	4,233	7,71	11,3
11'6"	138	4,275	7,82	11,4
11'9"	141	4,317	7,93	11,5
12'0"	144	4,358	8,04	11,6
12'3"	147	4,399	8,15	11,7
12'6"	150	4,440	8,26	11,8
12'9"	153	4,480	8,36	11,9
13'0"	156	4,520	8,47	12,1
13'3"	159	4,559	8,57	12,2
13'6"	162	4,598	8,68	12,3
13'9"	165	4,637	8,78	12,4
14'0"	168	4,675	8,88	12,5
14'3"	171	4,714	8,99	12,6
14'6"	174	4,751	9,09	12,7
14'9"	177	4,789	9,19	12,8
15'0"	180	4,826	9,29	12,9
15'3"	183	4,863	9,38	13,0
15'6"	186	4,900	9,48	13,1
15'9"	189	4,936	9,58	13,2
16'0"	192	4,972	9,68	13,3
16'3"	195	5,008	9,77	13,4
16'6"	198	5,044	9,87	13,5
16'9"	201	5,079	9,96	13,5
17'0"	204	5,114	10,05	13,6
17'3"	207	5,149	10,15	13,7
17'6"	210	5,184	10,24	13,8
17'9"	213	5,218	10,33	13,9
18'0"	216	5,253	10,42	14,0
18'2"	218	5,275	10,48	14,1

D1350-336
MULTIPLIER FOR VERTICAL-LIFT DRUM

DOOR HEIGHT		H.M.A	REV. OF DRUM	TURNS ON SPRING
(FT)	(IN)	(INCH)	(TURNS)	(TURNS)
18'0"	216	5,261	10,36	14,0
18'3"	219	5,295	10,45	14,1
18'6"	222	5,328	10,54	14,2
18'9"	225	5,362	10,63	14,3
19'0"	228	5,395	10,72	14,4
19'3"	231	5,428	10,81	14,5
19'6"	234	5,461	10,90	14,6
19'9"	237	5,494	10,98	14,6
20'0"	240	5,526	11,07	14,7
20'3"	243	5,558	11,16	14,8
20'6"	246	5,591	11,24	14,9
20'9"	249	5,623	11,33	15,0
21'0"	252	5,654	11,41	15,1
21'3"	255	5,686	11,50	15,2
21'6"	258	5,717	11,58	15,2
21'9"	261	5,748	11,66	15,3
22'0"	264	5,780	11,75	15,4
22'3"	267	5,810	11,83	15,5
22'6"	270	5,841	11,91	15,6
22'9"	273	5,872	11,99	15,7
23'0"	276	5,902	12,07	15,7
23'3"	279	5,932	12,15	15,8
23'6"	282	5,963	12,23	15,9
23'9"	285	5,992	12,31	16,0
24'0"	288	6,022	12,39	16,1
24'3"	291	6,052	12,47	16,1
24'6"	294	6,081	12,55	16,2
24'9"	297	6,111	12,63	16,3
25'0"	300	6,140	12,71	16,4
25'3"	303	6,169	12,78	16,5
25'6"	306	6,198	12,86	16,5
25'9"	309	6,227	12,94	16,6
26'0"	312	6,256	13,02	16,7
26'3"	315	6,284	13,09	16,8
26'6"	318	6,313	13,17	16,8
26'9"	321	6,341	13,24	16,9
27'0"	324	6,369	13,32	17,0
27'3"	327	6,397	13,39	17,1
27'6"	330	6,425	13,47	17,1
27'7"	331	6,434	13,49	17,2

P175S
(M45S)

P175W
(M45W)

P200W
(M50W)

P200S
(M50S)

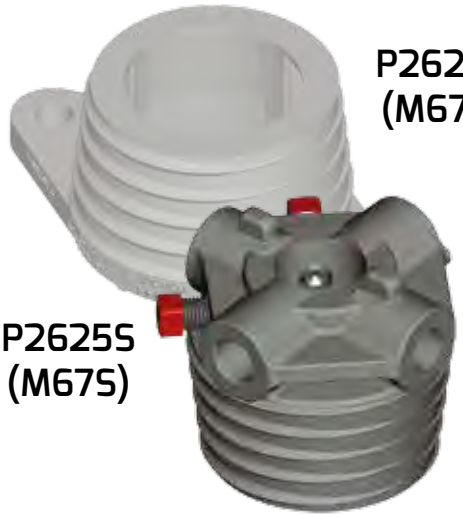

P2625W
(M67W)

P2625S
(M67S)

P375W
(M95W)

P375S
(M95S)

The above illustrations are for reference only. Canimex can change the design of plugs without notice.

P381S
(M97S)

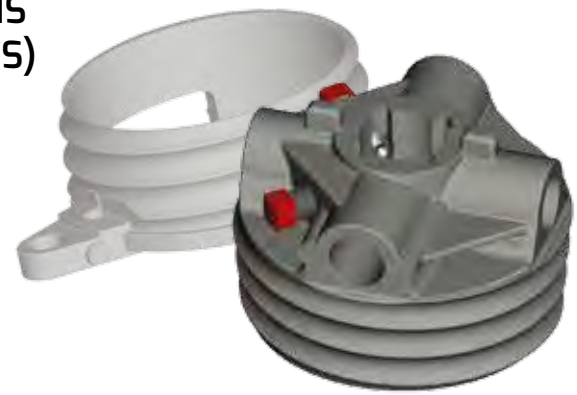

P381W
(M97W)

P528W
(M136W)

P528S
(M136S)

P602S
(M154S)

P602W
(M154W)

P603S
(M155S)

P603W
(M155W)

The above illustrations are for reference only. Canimex can change the design of plugs without notice.

WINDING PLUGS PHYSICAL SPECIFICATIONS

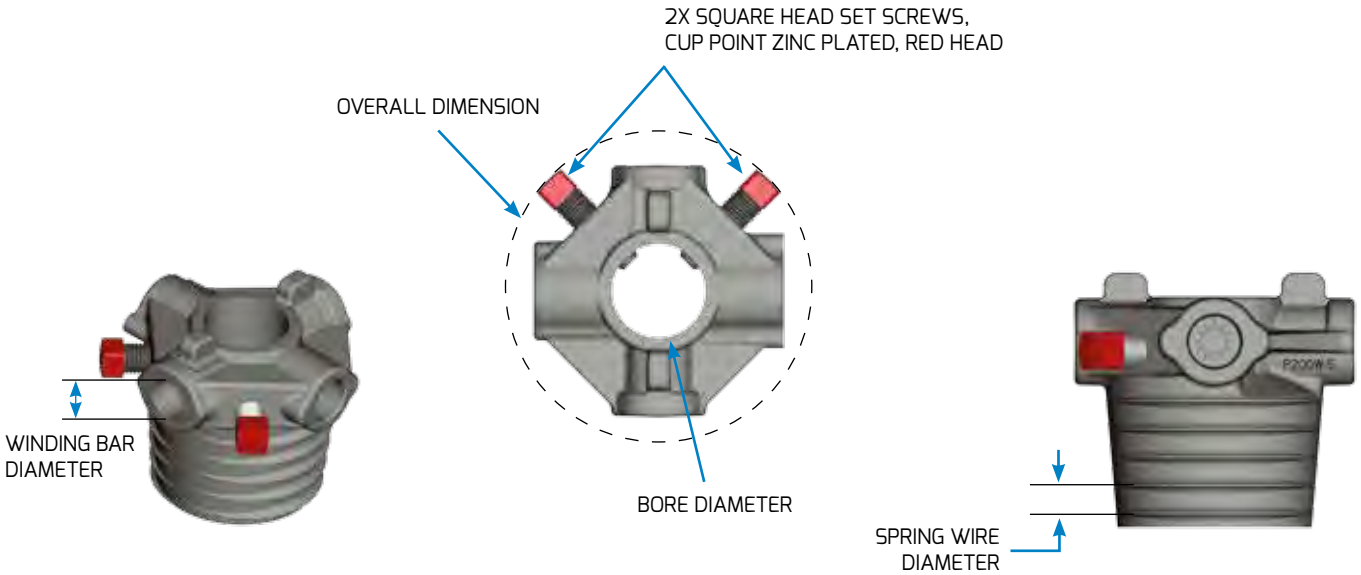

WINDING PLUGS	SPRING DIMENSIONS									
	NOMINAL SPRING INSIDE DIAMETER		MIN. SPRING INSIDE DIAMETER(1)		MAX. SPRING INSIDE DIAMETER(1)		MIN. SPRING WIRE DIAMETER(3)		MAX. SPRING WIRE DIAMETER(2)	
	in.	mm	in.	mm	in.	mm	in.	mm	in.	mm
P175W (M45W)	1 3/4	44.5	1.730	43.9	1.760	44.7	0.192	4.88	0.295	7.49
P200W (M50W)	2	50.8	1.980	50.3	2.010	51.1	0.192	4.88	0.295	7.49
P2625W (M67W)	2 5/8	66.7	2.605	66.2	2.635	66.9	0.263	6.68	0.331	8.41
P375W (M95W)	3 3/4	95.2	3.730	94.7	3.780	96.0	0.320	8.13	0.406	10.31
P381W (M97W)	3 3/4	95	3.730	94.74	3.780	96.01	0.320	8.13	0.406	10.31
P528W (M136W)	5 1/4	133	5.230	132.84	5.280	134.1	0.343	8.71	0.438	11.13
P602W (M154W)	6	152	5.980	151.9	6.030	153.16	0.343	8.71	0.438	11.13
P603W (M155W)	6	152	5.980	151.9	6.030	153.16	0.343	8.71	0.438	11.13

(1) If spring is out of specification limits, Canimex will not be held responsible for difficulty of plug insertion or spring slippage.

(2) Plugs should be used with garage door type of torsion spring meeting ASTM A229 or galvanized wire and free of coating that can reduce friction between plugs and spring. Contact Canimex engineering for approval of other material and coating.

(3) This data is for reference only, for the case of plug insertion into the spring.

PLEASE NOTE:

- Spring insertion must comply with Canimex technical document DT-005 “Specifications for screw-in torsion spring plug”.
- Winding bar must be as per Canimex drawing 6424-p1.
- Universal type of spring screwing threads. Universal means the spring could be a left hand wound or a right hand wound.
- When the keyed configuration is used, always use a key. Never anchor a set screw directly into the keyway of the shaft.
- Although these parts have universal threads, they can also be color-coded for your convenience.
- For shaft specifications refer to drawings 19477-p1, 19478-p1, 19479-p1, 20772-p1, 20994-p1, 24191-p1, 24192-p1, 24657-p2.

WARNING: Not seating Winding Bar at the bottom will induce excessive stress in the winding hole which may result in fracture of the part.

WARNING: Winding the springs could be very dangerous. To avoid serious injuries, please read the DT-005 “Specifications for screw-in torsion spring plug”.

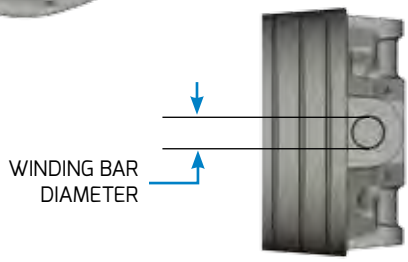

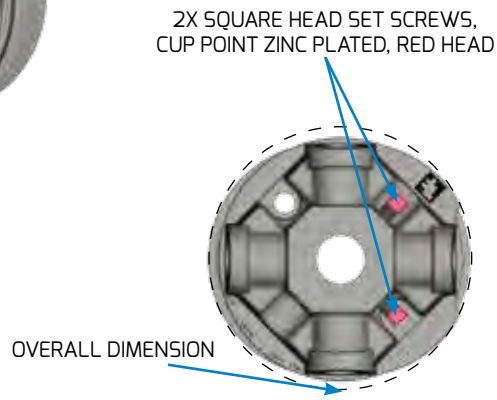

PLUG DIMENSIONS										MISCELLANEOUS				
MIN. WINDING BAR DIAMETER		MAX. WINDING BAR DIAMETER		OVERALL DIMENSION		BORE DIAMETER		KEYWAY		MAX. TORQUE TO BE GENER. BY SPRINGS		APPROXIMATE SHIPPING WEIGHT		NUMBER OF DEAD COIL
in.	mm	in.	mm	in.	mm	1 in 25.4 mm	1:1/4 in 31.75mm	0kw	4kw	lb-in.	Nm	lb	Kg	Coils
0.490	12.45	0.499	12.67	3.60	91.5	X	N/A	X	N/A	569	64	0.42	0.19	2.5
0.490	12.45	0.499	12.67	3.60	91.5	X	N/A	X	N/A	569	64	0.45	0.20	2.5
0.490	12.45	0.499	12.67	3.70	94.5	X	X	X	X	784	89	0.60	0.27	2.5
0.600	15.24	0.625	15.88	4.10	104.1	X	X	X	X	1388	157	1.10	0.50	2.5
0.600	15.24	0.625	15.88	4.091	103.9	X	N/A	X	X	1388	157	0.89	0.40	2.5
0.600	15.24	0.625	15.88	5.650	143.6	X	X	X	X	2000	226	1.94	0.88	1.5
0.600	15.24	0.625	15.88	6.641	168.7	X	X	X	X	2000	226	1.75	0.79	1.0
0.600	15.24	0.625	15.88	6.720	170.69	X	X	X	X	2000	226	2.19	0.99	1.5

- P175W and P200W are designed to be used on tubular shaft. Torque on set screw should not exceed 240 lb-in (27 Nm)
- For P2625W to P603W, the recommended seating torque on set screw is 240 lb-in (27 Nm) and should not exceed 300 lb-in (34 Nm).
- After insertion of P375W (M95W), P381W (M1797W), P528W (M136W), P602W (M154W) or P603W (M155W) the spring tail must be bent downward in the spring anchor hole.
- When specially ordered, parts for P528W (M136W) and P603W (M155W) can be used as outer segments of a duplex spring assembly. When used in this manner, do not exceed 2000 lb-in. (226 Nm) for the duplex assembly.

WARNING: Not seating Winding Bar at the bottom will induce excessive stress in the winding hole which may result in fracture of the part.

WARNING: Winding the springs could be very dangerous. To avoid serious injuries, please read the DT-005 "Specifications for screw-in torsion spring plug".

STATIONARY PLUGS PHYSICAL SPECIFICATIONS

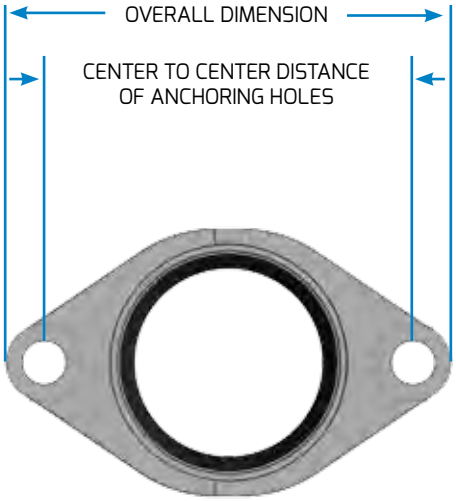

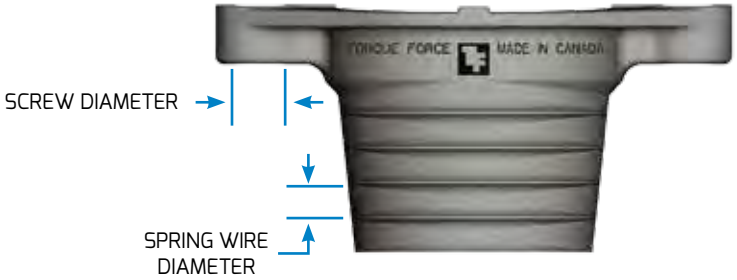

STATIONARY PLUGS	SPRING DIMENSIONS									
	NOMINAL SPRING INSIDE DIAMETER		MIN. SPRING INSIDE DIAMETER(1)		MAX. SPRING INSIDE DIAMETER(1)		MIN. SPRING WIRE DIAMETER(3)		MAX. SPRING WIRE DIAMETER(2)	
	in.	mm	in.	mm	in.	mm	in.	mm	in.	mm
P175S (M45S)	1 3/4	44.5	1.730	43.9	1.760	44.7	0.192	4.88	0.295	7.49
P200S (M50S)	2	50.8	1.980	50.3	2.010	51.1	0.192	4.88	0.295	7.49
P2625S (M67S)	2 5/8	66.7	2.605	66.2	2.635	66.9	0.263	6.68	0.331	8.41
P375S (M95S)	3 3/4	95.2	3.730	94.7	3.780	96.0	0.320	8.13	0.406	10.31
P381S (M97S)	3 3/4	95	3.730	94.74	3.780	96.0	0.320	8.13	0.406	10.31
P528S (M136S)	5 1/4	133	5.230	132.84	5.280	134.1	0.343	8.71	0.438	11.13
P602S (M154S)	6	152	5.980	151.9	6.030	153.2	0.343	8.71	0.438	11.13
P603S (M155S)	6	152	5.980	151.9	6.030	153.2	0.343	8.71	0.438	11.13

(1) If spring is out of specification limits, Canimex will not be held responsible for difficulty of plug insertion or spring slippage.

(2) Plugs should be used with garage door type of torsion spring meeting ASTM A229 or galvanized wire and free of coating that can reduce friction between plugs and spring. Contact Canimex engineering for approval of other material and coating.

(3) This data is for reference only, for the case of plug insertion into the spring.

PLEASE NOTE:

- Universal type of spring screwing threads. Universal means the spring could be a left hand wound or a right hand wound.
- Recommended bearing/bushing Canimex C16-32F family.
- Spring insertion must comply with Canimex technical document DT-005 “Specifications for screw-in torsion spring plug”.
- Ears minimum impact resistance : 19.5 lb-ft (2.2Nm).

WARNING: Winding the springs could be very dangerous. To avoid serious injuries, please read the DT-005 “Specifications for screw-in torsion spring plug”.

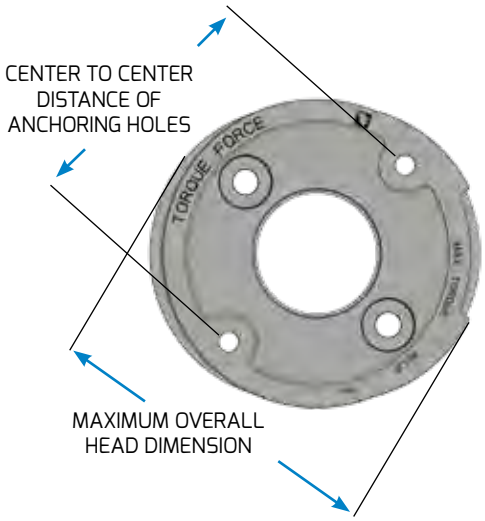

PLUG DIMENSIONS					MISCELLANEOUS				
SCREW TO BE USED	MAX. OVERALL HEAD DIMENSION		CENTER TO CENTER DISTANCE OF ANCHORING HOLES		MAX. TORQUE TO BE GENERATED BY SPRING		APPROXIMATE SHIPPING WEIGHT		NUMBER OF DEAD COIL
in.	in.	mm	in.	mm	lb-in.	Nm	lb	Kg	Coils
3/8-16	4.08	104	3 3/8	86	569	64	0.19	0.09	2.5
3/8-16	4.08	104	3 3/8	86	569	64	0.17	0.08	2.5
3/8-16	5.17	132	4 1/4	108	784	89	0.33	0.15	2.5
3/8-16 or M10	6.20	158	5:7/16 3:7/16	138 87	1388	157	0.60	0.27	2.5
3/8-16 or M10	6.20	158	5:7/16 3:7/16	138 87	1388	157	0.49	0.22	2.5
3/8-16 or M10	5.73	146	4 1/4 3:7/16	108 87	2000	226	0.92	0.42	1.5
3/8-16	6.64	169	5:7/16	138	2000	226	1.19	0.54	1.0
3/8-16 or M10	6.69	170	5:7/16 3:15/16 - 3:7/16	138 100-87	2000	226	1.19	0.54	1.5

- After insertion of P375S (M95S), P381S (M179ZS), P528S (M136S), P602S (M154S) or P603S (M155S) the spring tail must be bent downward in the spring anchor hole.
- When specially ordered, parts for P528S (M136S) and P603S (M155S) can be used as outer segments of a duplex spring assembly. When used in this manner, do not exceed 2000 lb-in. (226 Nm) for the duplex assembly.

WARNING: Winding the springs could be very dangerous. To avoid serious injuries, please read the DT-005 "Specifications for screw-in torsion spring plug".