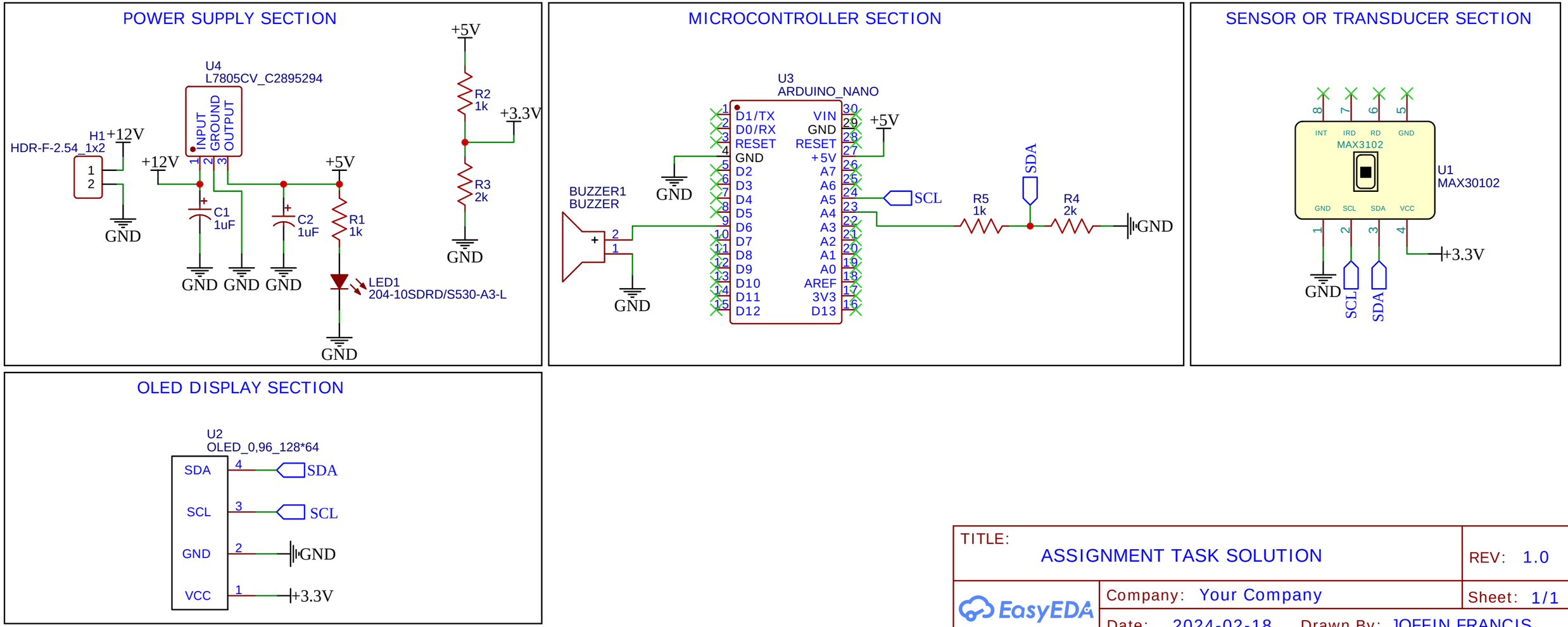
POWER SUPPLY SECTION
U4
L7805CV_C2895294
INPUT
GROUND
OUTPUT
H1
HDR-F-2.54_1x2
+12V
GND
C1
1uF
C2
1uF
R1
1k
+5V
R2
1k
R3
2k
+3.3V
LED1
204-10SDRD/S530-A3-L
MICROCONTROLLER SECTION
U3
ARDUINO_NANO
D1/TX
D0/RX
RESET
GND
D2
D3
D4
D5
D6
D7
D8
D9
D10
D11
D12
VIN
GND
RESET
+5V
A7
A6
A5
A4
A3
A2
A1
A0
AREF
3V3
D13
BUZZER1
BUZZER
SCL
SDA
R5
1k
R4
2k
SENSOR OR TRANSDUCER SECTION
U1
MAX30102
MAX3102
INT
IRD
RD
GND
SCL
SDA
VCC
OLED DISPLAY SECTION
U2
OLED_0,96_128*64
SDA
SCL
GND
VCC
TITLE:
ASSIGNMENT TASK SOLUTION
REV: 1.0
EasyEDA
Company: Your Company
Sheet: 1/1
Date: 2024-02-18
Drawn By: JOFFIN FRANCIS