ESP32 + SD Card

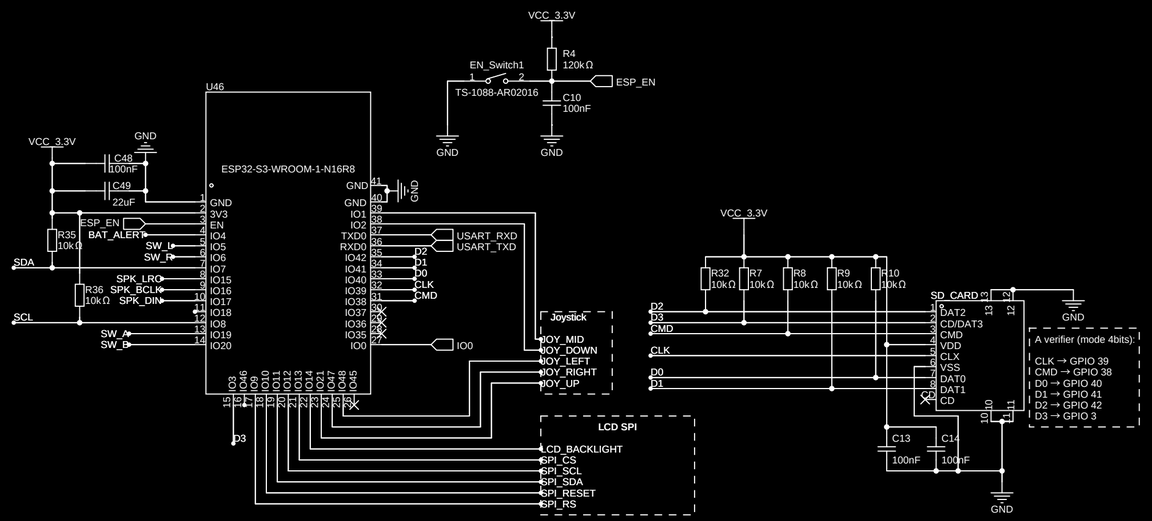

3.3V Regulator

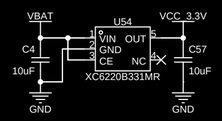

Battery + charger +monitor

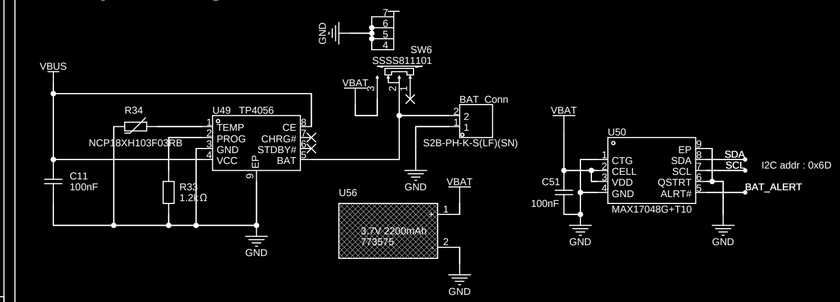

Switches

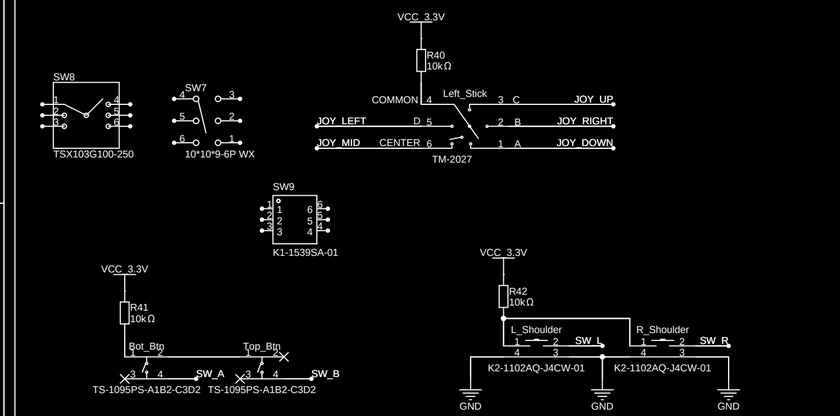

ESP32 Programmer USB/UART

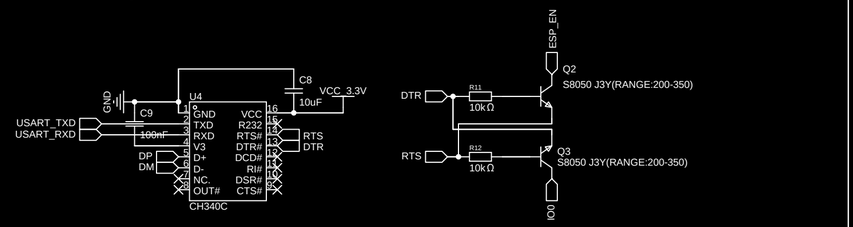

USB C

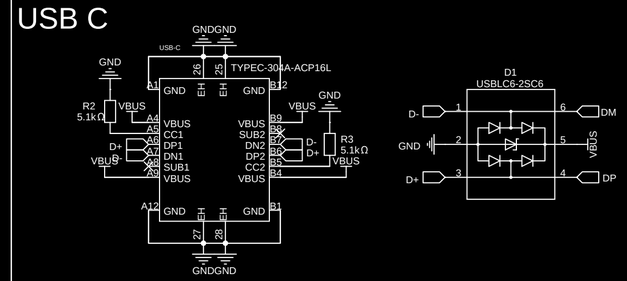

LCD 2" + Gyroscope

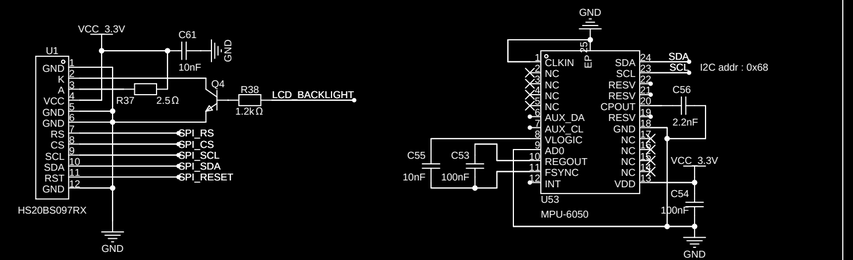

Vibrator

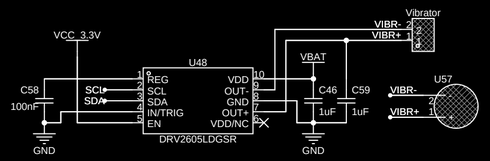

SOUND I2S

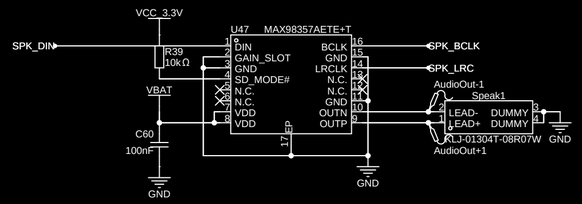

Designed and powered by

Schematic	Main_Schematic	Create at	2026-02-14
		Update at	2026-02-25
Board	BlinkerOne_MAIN	Page	P1
Drawn	BlinkerOne		
Reviewed			
	Version	Size	Page 1 Total 1
EasyEDA	V1.0	A4	EasyEDA.com