CDP-211/311

SERVICE MANUAL

US Model
Canadian Model
AEP Model
UK Model
E Model
Australian Model

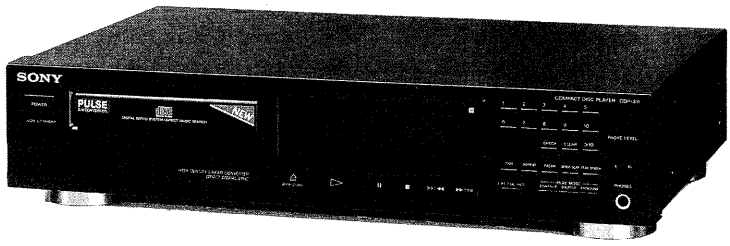

Photo: CDP-311 model

Model Name Using Similar Mechanism	CDP-297/397
Tape Transport Mechanism Type	CDM14-5DB10
Optical Pickup Block Type	BU-5BD10

SPECIFICATIONS

Compact disc player

Laser	Semiconductor laser (λ = 780 nm)
Wavelength	780 – 790 nm
Frequency response	2 Hz to 20 kHz ±0.5 dB
Signal-to-noise ratio	More than 100 dB
Dynamic range	More than 98 dB
Harmonic distortion	Less than 0.0045%
Channel separation	More than 95 dB

Outputs

LINE OUT (phono jacks)	Output level 2 V (at 50 kilohms) Load impedance over10 kilohms
PHONES (stereo phone jack)	Output level max. 10 mW Load impedance 32 ohms

General

Power requirements	AEP, Germany models : 220 – 230 V AC, 50/60 Hz US, Canadian modls : 120 V, 60 Hz UK, Australian models : 240 V AC, 50 Hz For other countries: 110-120/220-240 V AC, adjustable with the voltage selector, 50/60 Hz
Power consumption	10 W
Dimensions (approx., including projections)	430 x 100 x 295 mm (w/h/d) (17 x 4 x 11 5/8 inches)
Mass (approx.)	3.2 kg (7 lbs 1 oz)

Remote commander (only for CDP-311)

Remote control system	Infrared control
Power requirements	3 VDC with two R6 (size AA) batteries
Dimensions (approx., including projections)	40 x 20 x 175 mm (w/h/d) (1 5/8 x 13/16 x 7 inches)
Mass (approx.)	95 g (4 oz)

Supplied accessories

Audio cord	(1) (2 phono plugs – 2 phono plugs)
Remote commander (only for CDP-311)	(1)
Sony SUM-3 (NS) batteries (only for CDP-311)	(2)
Plug adaptor (except for European, Canadian and Australian models)	(1)

Design and specifications are subject to change without notice.

COMPACT DISC PLAYER

SONY®

SAFETY CHECK-OUT

After correcting the original service problem, perform the following safety check before releasing the set to the customer :

Check the antenna terminals, metal trim, "metallized" knobs, screws, and all other exposed metal parts for AC leakage. Check leakage as described below.

LEAKAGE TEST

The AC leakage from any exposed metal part to earth ground and from all exposed metal parts to any exposed metal part having a return to chassis, must not exceed 0.5 mA (500 microampers.).

Leakage current can be measured by any one of three methods.

1. A commercial leakage tester, such as the Simpson 229 or RCA WT-540A. Follow the manufacturers' instructions to use these instruments.
2. A battery-operated AC milliammeter. The Data Precision 245 digital multimeter is suitable for this job.
3. Measuring the voltage drop across a resistor by means of a VOM or battery-operated AC voltmeter. The "limit" indication is 0.75V, so analog meters must have an accurate low-voltage scale. The Simpson 250 and Sanwa SH-63Trd are examples of a passive VOM that is suitable. Nearly all battery operated digital multimeters that have a 2V AC range are suitable. (See Fig. A)

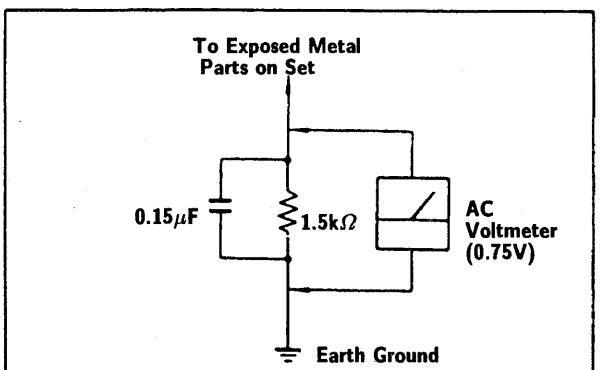

Fig. A. Using an AC voltmeter to check AC leakage.

SAFETY-RELATED COMPONENT WARNING!!

COMPONENTS IDENTIFIED BY MARK ⚠ OR DOTTED LINE WITH MARK ⚠ ON THE SCHEMATIC DIAGRAMS AND IN THE PARTS LIST ARE CRITICAL TO SAFE OPERATION. REPLACE THESE COMPONENTS WITH SONY PARTS WHOSE PART NUMBERS APPEAR AS SHOWN IN THIS MANUAL OR IN SUPPLEMENTS PUBLISHED BY SONY.

TABLE OF CONTENTS

Section	Title	Page
1.	GENERAL	4
2.	DISASSEMBLY	
3.	ELECTRICAL BLOCK CHECKING	6
4.	IC PIN DESCRIPTION	8
5.	DIAGRAMS	
5-1.	Block Diagram	12
5-2.	Printed Wiring Boards (New Type)	15
5-3.	Schematic Diagram	19
5-4.	Printed Wiring Boards (Former Type)	23
5-5.	Semiconductor Lead Layouts	28
6.	EXPLODED VIEWS	
6-1.	Front Panel Section	29
6-2.	CD Mechanism Section (CDM14-5BD10)	31
6-3.	Optical Pick-up Block (BU-5BD10)	32
7.	ELECTRICAL PARTS LIST	33

MODEL IDENTIFICATION

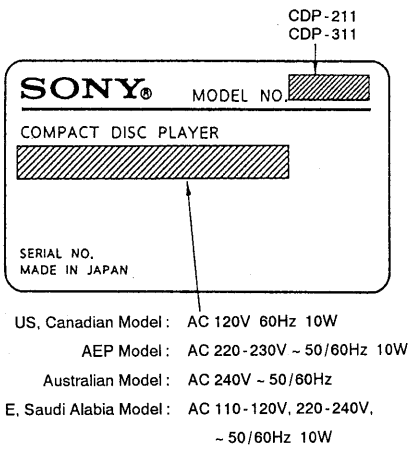

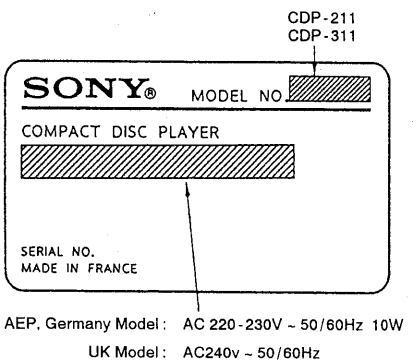

ATTENTION AU COMPOSANT AYANT RAPPORT À LA SÉCURITÉ!

LES COMPOSANTS IDENTIFIÉS PAR UNE MARQUE ⚠ SUR LES DIAGRAMMES SCHÉMATIQUES ET LA LISTE DES PIÈCES SONT CRITIQUES POUR LA SÉCURITÉ DE FONCTIONNEMENT. NE REMPLACER CES COMPOSANTS QUE PAR DES PIÈCES SONY DONT LES NUMÉROS SONT DONNÉS DANS CE MANUEL OU DANS LES SUPPLÉMENTS PUBLIÉS PAR SONY.

SERVICING NOTES

NOTES ON HANDLING THE OPTICAL PICK-UP BLOCK OR BASE UNIT

The laser diode in the optical pick-up block may suffer electrostatic breakdown because of the potential difference generated by the charged electrostatic load, etc. on clothing and the human body.

During repair, pay attention to electrostatic breakdown and also use the procedure in the printed matter which is included in the repair parts.

The flexible board is easily damaged and should be handled with care.

NOTES ON LASER DIODE EMISSION CHECK

The laser beam on this model is concentrated so as to be focused on the disc reflective surface by the objective lens in the optical pick-up block. Therefore, when checking the laser diode emission, observe more than 30 cm away from the objective lens.

LASER DIODE AND FOCUS SEARCH OPERATION CHECK

1. Turn POWER switch on with no disc inserted and disc table closed.
2. Confirm that the following operation is performed while observing the objecting lens.

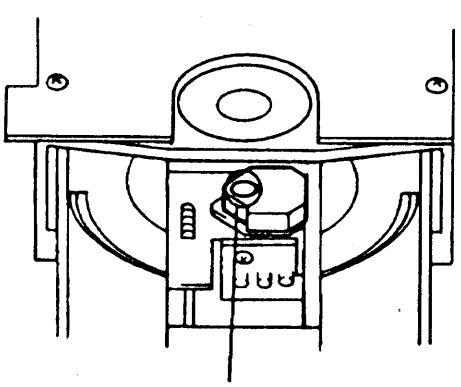

❶ Confirm that laser beam is spread.

❷ Up and down motion of the objective lens. (3 times)

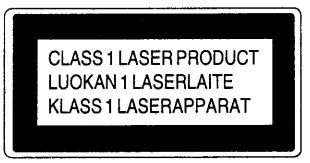

This appliance is classified as a CLASS 1 LASER product. The CLASS 1 LASER PRODUCT MARKING is located on the rear exterior.

The following caution label is located inside of the unit.

CAUTION	: INVISIBLE LASER RADIATION WHEN OPEN. AVOID EXPOSURE TO BEAM.
ADVARSEL	: USYNLIG LASERSTRÅLING VED ÅBNING NÅR SIKKERHEDSAFBRYDERE ER UDE AF FUNKTION. UNDGÅUDS ÆTTELSE FOR STRÅNING.
VAROI	: AVATTAESSA JA SUOJALUKITUS OHITETTAESSA DLET ALTTIINA LASERSÄTEILYLLE.
VARNING	: LASERSTRALING NAR DENNA DEL AR OPPNAD OCH SPÄRREN ÄR URXOPPLAD.
ADVARSEL	: USYNLIG LASERSTRÅLING NÅR DEKSEL ÅPNES UNNGA EKSPONERING FOR STRÅLEN.

SECTION 1
GENERAL

This section is extracted from instruction manual.

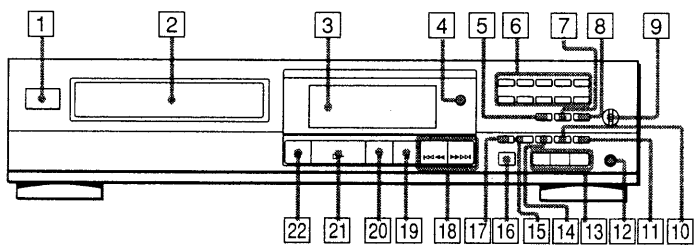

RM-D190

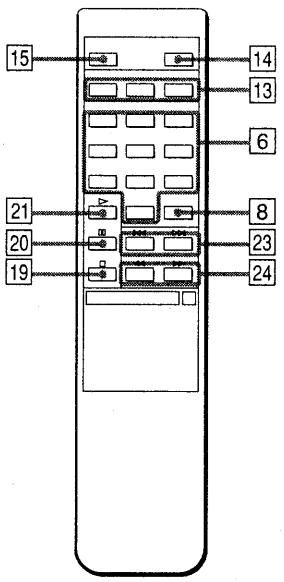

(only for CDP-311)

Identifying the Parts

Refer to the pages indicated in parenthesis for details.

Front Panel/Remote Commander

1 POWER switch (16)
2 Disc tray (16)
3 Display window
4 Remote sensor
5 CHECK (program check) button (30)
6 Numeric buttons (20, 26, 28, 36, 40)
7 CLEAR (program clear) button (30)
8 ≥10 (over 10) button (20)
9 PHONE LEVEL control (16)
10 MUSIC SCAN button (32)
11 PEAK SEARCH button (42)
12 PHONES jack (16)
13 Play Mode buttons
CONTINUE button (24, 26, 38)
SHUFFLE button (24, 26, 38)
PROGRAM button (26, 28)
(PGM for the remote commander)
14 FADER button (22)
15 REPEAT button (34)
16 EDIT/TIME FADE button (36, 40)
17 TIME button (18)
18 ⏮ ◀◀ / ▶▶ ⏭ (AMS*/manual search) buttons
(20, 22, 28, 32, 36, 40, 42)
19 ■ (stop) button (16)
20 ❚❚ (pause) button (16)
21 ▶ (play) button (16)
22 ⏏ OPEN/CLOSE button (16)
23 ⏮ / ⏭ (AMS*) buttons (20, 28)
(Only on the remote commander)
24 ◀◀ / ▶▶ (manual search)(22, 32)
(Only on the remote commander)

* AMS is the abbreviation of Automatic Music Sensor.

SECTION 2
DISASSEMBLY

Note: Follow the disassembly procedure in the numerical order given.

FRONT PANEL REMOVAL

When removing the front panel assembly on electric power failure, first open the loading block by turning cam with a screwdriver as shown in the figure, next pull out the loading block with hand, and remove the loading panel as shown in the figure. Then remove the front panel assembly.

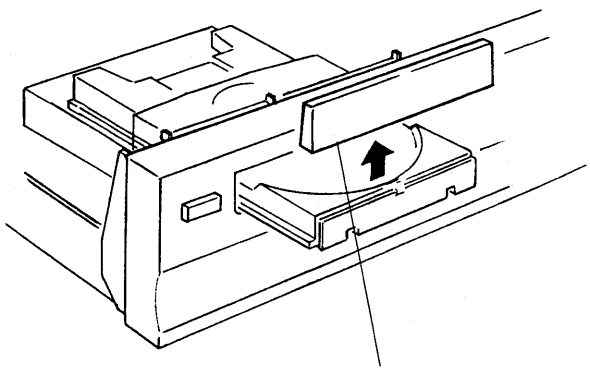

❸ Remove loading panel to the direction of arrow.

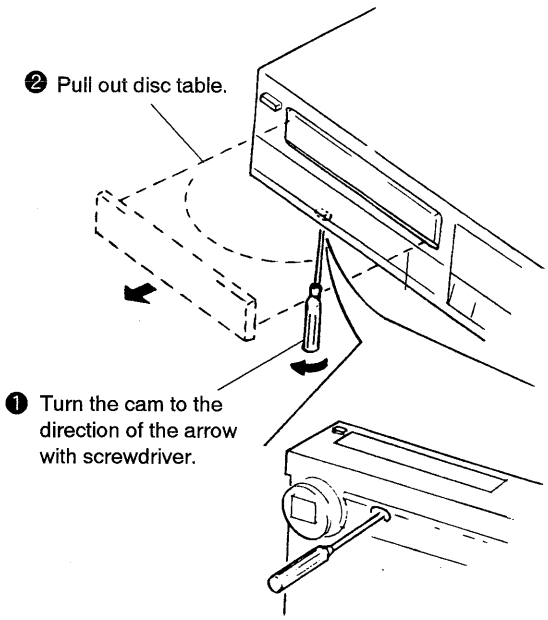

Note: Keep the set horizontal.

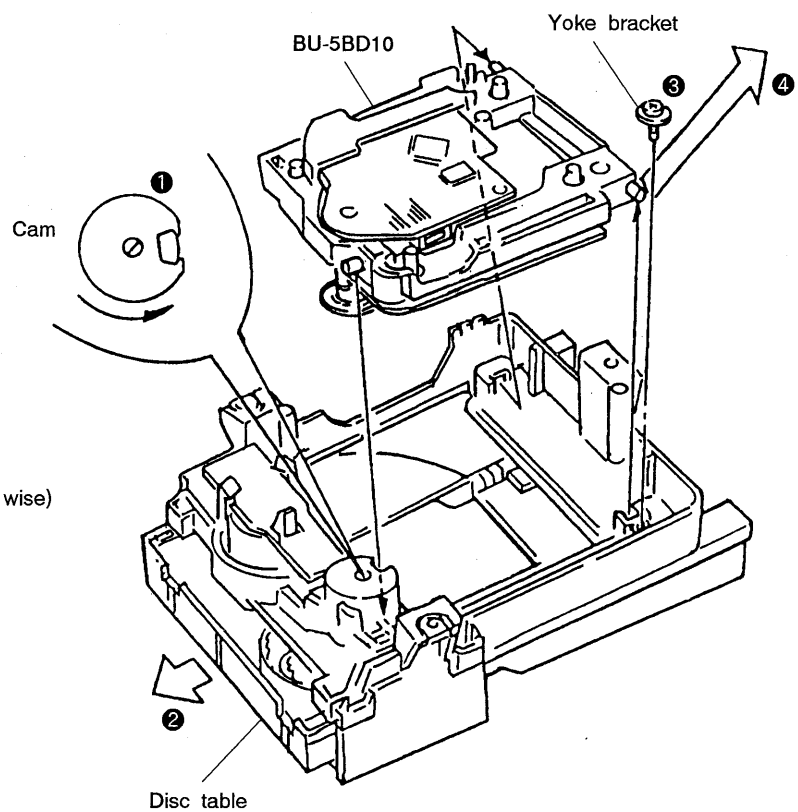

MD (BU-5BD10) REMOVAL

❶ Turn the cam to the direction of arrow (Counter clock wise) by minus screw driver.

❷ Take off the disc table.

❸ Remove the yoke bracket.

❹ Remove the MD (BU-5BD10) to the direction of arrow.

SECTION 3
ELECTRICAL BLOCK CHECKING

Note :

1. CD Block basically constructed to operate without adjustment. Therefore, check each item in order given.
2. Use YEDS-18 disc (3-702-101-01) unless otherwise indicated.
3. Use the oscilloscope with more than 10MΩ impedance.
4. Clean an object lens by an applicator with neutral detergent when the signal level is low than specified value with the following checks.

S-Curve Check

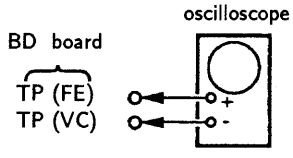

Procedure :

1. Connect oscilloscope to test point TP (FE) on BD board.
2. Connect between test point TP (FEI) and TP (VC) by lead wire.
3. Turned Power switch on and actuate the focus search. (actuate the focus search when disc table is moving in and out.)
4. Check the oscilloscope waveform (S-curve) is symmetrical between A and B. And confirm peak to peak level within 3±1Vp-p.

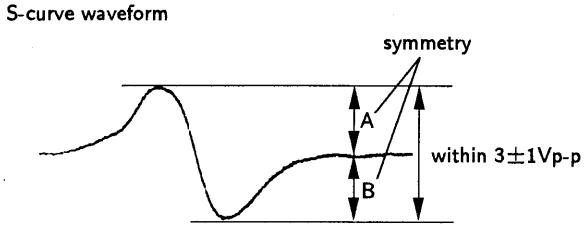

5. After check, remove the lead wire connected in step 2.

Note : • Try to measure several times to make sure that the ratio of A : B or B : A is more than 10 : 7.
• Take sweep time as long as possible and light up the brightness to obtain best waveform.

RF Level Check

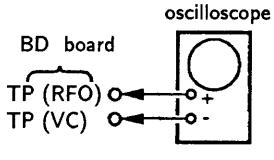

Procedure :

1. Connect oscilloscope to test point TP (RFO) on BD board.
2. Turn Power switch on.
3. Put disc (YEDS-18) in and playback.
4. Confirm that oscilloscope waveform is clear and check RF signal level is correct or not.

Note :

Clear RF signal waveform means that the shape "◇" can be clearly distinguished at the center of the waveform.

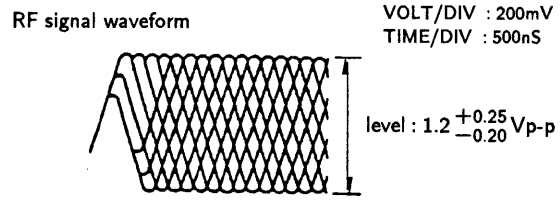

E-F Balance Check

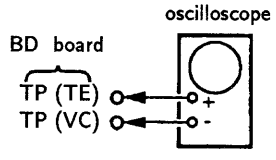

Procedure :

1. Connect test point TP (ADJ) to ground and TP (TEI) to TP (VC) with lead wire.
2. Connect oscilloscope to test point TP (TE) on BD board.
3. Turn Power switch on.
4. Put disc (YEDS-18) in and playback.
5. Confirm that the osilloscope waveform is symmetrical on the top and bottom in relation to 0V, and check this level.

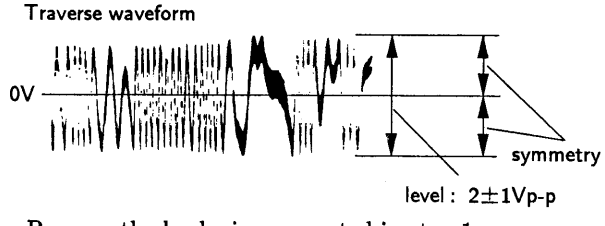

6. Remove the lead wire connected in step 1.

RF PLL Free-run Frequency Check

Procedure :

1. Connect frequency counter to test point (PCK) with lead wire.

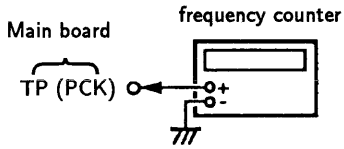

2. Turn Power switch on.
3. Confirm that reading on frequency counter is 4.3218 MHz.

Adjustment Location :

【BD BOARD】

- Conductor side -

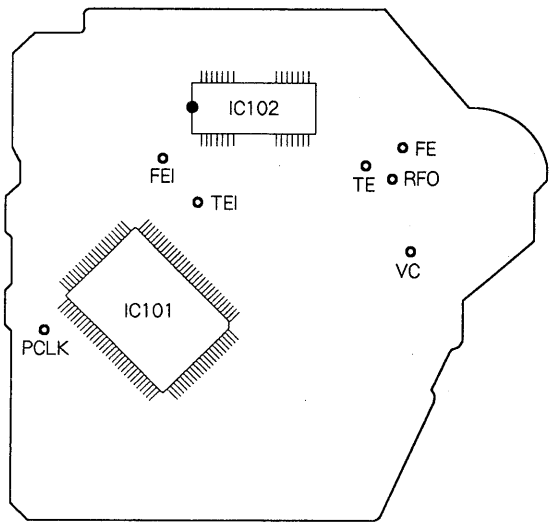

【MAIN BOARD】

- Conductor side -

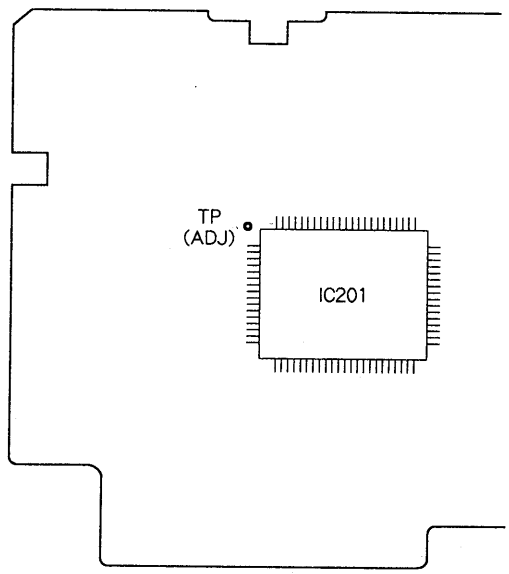

SECTION 4
IC PIN DESCRIPTION

• IC101 CXD2515Q

No.	Pin Name	I/O	Description
1	SRON	O	Sled drive output
2	SRDR	O	Sled drive output
3	SFON	O	Sled drive output
4	TFDR	O	Tracking drive output
5	TRON	O	Tracking drive output
6	TRDR	O	Tracking drive output
7	TFON	O	Tracking drive output
8	FFDR	O	Focus drive output
9	FRON	O	Focus drive output
10	FRDR	O	Focus drive output
11	FFON	O	Focus drive output
12	VCOO	O	VCO output for analog EFM PLL
13	VCOI	I	VCO output for analog EFM PLL
14	TEST	I	TEST pin connected normally to GND
15	DVss	—	Digital GND
16	TES2	I	TEST pin connected normally to GND
17	TES3	I	TEST pin connected normally to GND
18	PDO	O	Charge-pump output for analog EFM PLL
19	VPCO	O	Charge-pump output for variable pitch PLL
20	VCKI	I	Clock input from variable pitch external VCO
21	AVD2	—	Analog power supply
22	IGEN	I	Power supply pin for operational amplifiers
23	AVS2	—	Analog GND
24	ADII	I	Input pin for A/D converter
25	ADIO	O	Operational amplifier output pin
26	RFDC	I	RF signal input
27	TE	I	Tracking error signal input
28	SE	I	Sled error signal input
29	FE	I	Focus error signal input
30	VC	I	Center voltage input pin
31	FILO	O	Filter output for master PLL
32	FILI	I	Filter input for master PLL
33	PCO	O	Charge-pump output for master PLL
34	CLTV	I	Control voltage input for master VCO
35	AVS1	—	Analog GND
36	RFAC	I	EFM signal input
37	BIAS	I	Asymmetry circuit constant current input
38	ASYI	I	Asymmetry comparate voltage input
39	ASYO	O	EFM full swing output
40	AVD1	—	Analog power supply
41	DVDD	—	Digital power supply
42	ASYE	I	Asymmetry circuit ON/OFF
43	PSSL	I	Audio data output mode selection input
44	WDCK	O	48-bit slot D/A interface. Word clock

No.	Pin Name	I/O	Description
45	LRCK	O	48-bit slot D/A interface. LR clock
46	DATA	O	DA 16 output when PSSL = 1. 48-bit slot serial data when PSSL = 0
47	BCLK	O	DA 15 output when PSSL = 1. 48-bit slot data when PSSL = 0
48	64DATA	O	DA 14 output when PSSL = 1. 64-bit slot data when PSSL = 0
49	64BCLK	O	DA 13 output when PSSL = 1. 64-bit slot data when PSSL = 0
50	64LRCK	O	DA 12 output when PSSL = 1. 64-bit slot data when PSSL = 0
51	GTOP	O	DA 11 output when PSSL = 1. GTOP output when PSSL = 0
52	XUGF	O	DA 10 output when PSSL = 1. XUGF output when PSSL = 0
53	XPLCK	O	DA 09 output when PSSL = 1. XPLCK output when PSSL = 0
54	GFS	O	DA 08 output when PSSL = 1. GFS output when PSSL = 0
55	PFCK	O	DA 07 output when PSSL = 1. RFCK output when PSSL = 0
56	C2PO	O	DA 06 output when PSSL = 1. C2PO output when PSSL = 0
57	XRAOF	O	DA 05 output when PSSL = 1. XRA0F output when PSSL = 0
58	MNT3	O	DA 04 output when PSSL = 1. MNT3 output when PSSL = 0
59	MNT2	O	DA 03 output when PSSL = 1. MNT2 output when PSSL = 0
60	MNT1	O	DA 02 output when PSSL = 1. MNT1 output when PSSL = 0
61	MNT0	O	DA 01 output when PSSL = 1. MNT0 output when PSSL = 0
62	XTAI	I	X'tal oscillator circuit input
63	XTAO	O	X'tal oscillator circuit output
64	XTSL	I	X'tal selection input pin
65	DVss	—	Digital GND
66	FSTI	I	2/3 divider output of pins 62,63
67	FSTO	O	2/3 divider output of pins 62,63
68	C4M	O	4.2336MHz output
69	C16M	O	16.9344MHz output
70	MD2	I	Digital-out ON/OFF control pin
71	DOUT	O	Digital-out output pin
72	EMPH	O	Playback disc output in emphasis mode
73	WFCK	O	WFCK output
74	SCOR	O	Sub-code sync output
75	SBSO	O	Sub-P through Sub-W serial output
76	EXCK	I	Clock input for SBS0 read-out
77	SUBQ	O	Sub-Q 80-bit output
78	SQCK	I	Clock input for SQS0 read-out
79	MUTE	I	Muting selection pin
80	SENS	O	SENS output
81	XRST	I	System reset
82	DIRC	I	Used in 1-track jump mode
83	SCLK	I	SENS serial data read-out clock
84	DFSW	I	DFCT selection pin
85	ATSK	I	Input pin for anti-shock
86	DATA	I	Serial data input, supplied from CPU
87	XLAT	I	Latch input, supplied from CPU
88	CLOK	I	Serial data transfer clock input, supplied from CPU

No.	Pin Name	I/O	Description
89	COUT	O	Numbers of track counted signal output
90	DVDD	—	Digital power supply
91	MIRR	O	Mirror signal output
92	DFCT	O	Defect signal output
93	FOK	O	Focus OK output
94	FSW	O	Output to select spindle motor output filter
95	MON	O	Output to control ON/OFF of spindle motor
96	MDP	O	Output to control spindle motor servo
97	MDS	O	Output to control spindle motor servo
98	LOCK	O	GFS is sampled by 460Hz. H when GFS is H.
99	SSTP	I	Input signal to detect disc inner most track
100	SFDR	O	Sled drive output

• IC201 CD System Controller (CXP50112-416Q)

No.	Pin Name	I/O	Description
1 | 20	S20 | S1	O	Fluorescent character display tube segment output
21 | 27	1G | 7G	O	Fluorescent character display tube timing output
28	8G	O	Not used in this unit (open)
29	SCOR	I	Sub-code sync input from IC101 (CXD2515Q) Sub-code reading begins when this signal is received.
30	OPEN	–	Not used in this unit (open)
31	+5V	I	Not used in this unit (connected to +5V)
32	RST	I	Resetting input for the microprocessor
33	+5V	–	Not used in this unit (connected to +5V)
34	VDD	–	+5V power supply terminal
35 | 40	AD0 | AD5	I	Key data input (arrangement is selected with the A/D terminal)
41	GND	I	Not used in this unit (connected to +5V)
42	PGML	O	Program latch to the digital filter (IC301)
43	GND		Not used in this unit (connected to GND)
44	CLK	O	Serial data transmission clock output to IC101 (CXD2515Q) (or IC301 (CXD2565M))
45	DATA	O	Serial data output to IC101 (CXD2515Q) (or IC301 (CXD2565M))
46	GND	I	Not used in this unit (connected to GND)
47	SQCK	O	Sub-code Q reading clock output to IC101 (CXD2515Q)
48	AMUTE	O	Muting control output "H" : Mute
49	GFS	I	GFS signal input from IC101 (CXD2515Q)
50	FOK	I	Focus OK signal input from IC101 (CXD2515Q)
51	OPEN	O	Not used in this unit (open)
52	OPEN	O	Not used in this unit (open)
53	LDON	O	Laser diode ON/OFF switching output "H" : ON

No.	Pin Name	I/O	Description
54	XLT	O	Serial data latch output to IC101 (CXD2515Q)
55	A/D	I	Key arrangement switching (connected to +5V)
56	GND	I	Not used in this unit (connected to GND)
57	SENSE	I	SENSE input from IC101 (CXD2515Q)
58	SUBQ	I	Sub-code Q data input from IC101 (CXD2515Q)
59	SCLK	O	Data reading clock output to IC101 (CXD2515Q)
60	OPEN	O	Not used in this unit (open)
61	TIMER	I	Auto start switching "H" : OFF
62	RM	I	Remote control input from IC202 (GP1U58XB). L : Active
63	OUTSW	I	S151 (loading out switch) input
64	INSW	I	S152 (loading in switch) input
65	ADJ	I	Test mode input. Normally H
66	AFADJ	I	Test mode input. Normally H. Keys and displays can be tested when adjusted to "L"during power on.
67	LDOUT	O	Output for turn the loading motor (M151) to un loading. "H" : Un loading
68	LDIN	O	Output for turn the loading motor (M151) to loading. "H" : Loading
69	OPEN	–	Not used in this unit (open)
70	OPEN	–	Not used in this unit (open)
71	VSS	–	GND terminal
72	XTAL	O	Vibrator connection terminal (4MHz)
73	+5V	–	Not used in this unit (connected to +5V)
74	EXTAL	I	Vibrator connection terminal (4MHz)
75	+5V	I	Reference voltage input of power supply voltage resetting circuit
76	−30V	–	Power supply for the fluorescent character display tube (−30V)
77		O	Not used in this unit
78		O	Not used in this unit

SECTION 5
DIAGRAMS

5-1. BLOCK DIAGRAM

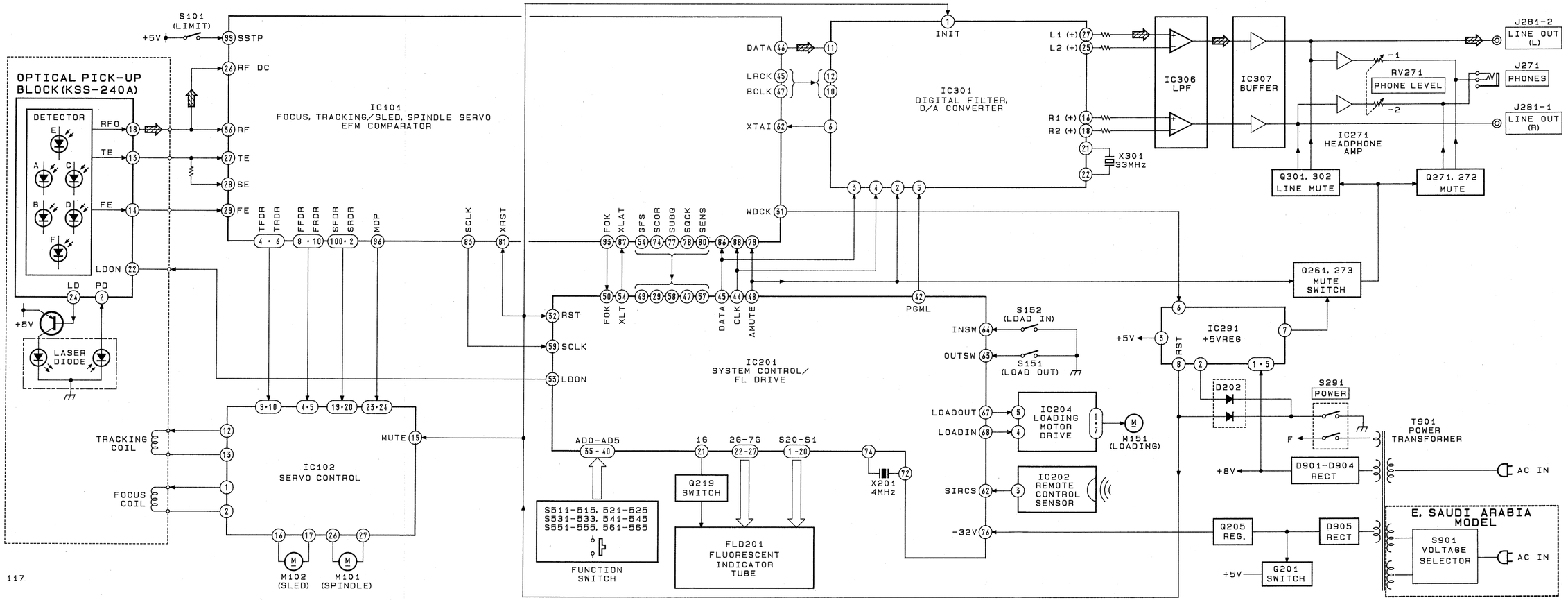

5-2. PRINTED WIRING BOARDS (NEW TYPE)

• Refer to page 28 for the Semiconductor Lead Layouts.

• Semiconductor Location

Ref. No.	Location
D201	H-10
D202	H-19
D203	H-11
D205	I-11
D261	H-20
D292	G-21
D901	B-11
D902	B-11
D903	B-12
D904	B-12
D905	B-12
IC101	D-2
IC102	B-3
IC201	I-13
IC202	J-18
IC204	H-11
IC271	J-24
IC291	H-20
IC301	H-16
IC306	H-17
IC307	H-18
Q201	H-11
Q205	I-11
Q219	J-12
Q261	H-19
Q271	H-24
Q272	H-24
Q273	H-20
Q301	H-18
Q302	H-18

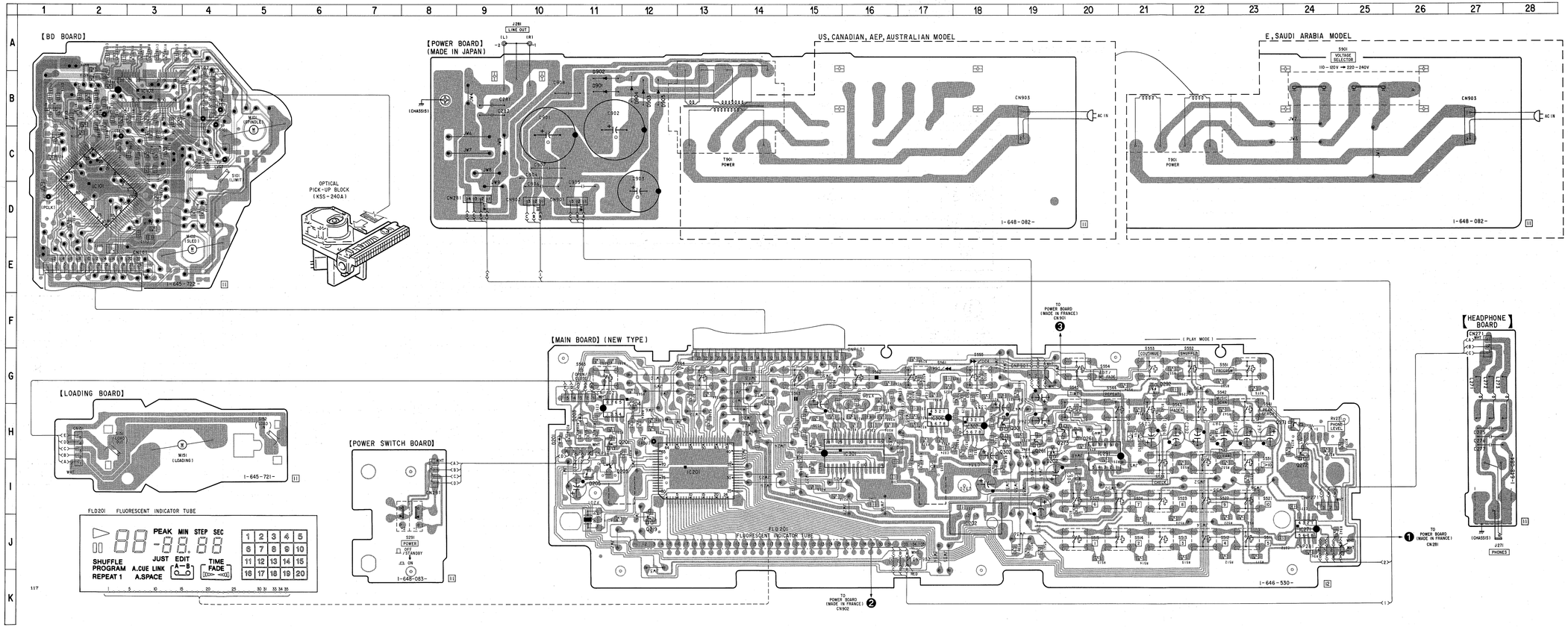

Note:

- ■ : parts mounted on the conductor side.
- ● : Through hole.
- : Pattern on the side which is seen.
- : Pattern of the rear side.

5-3. SCHEMATIC DIAGRAM

• Refer to page 26 for IC Block Diagrams.

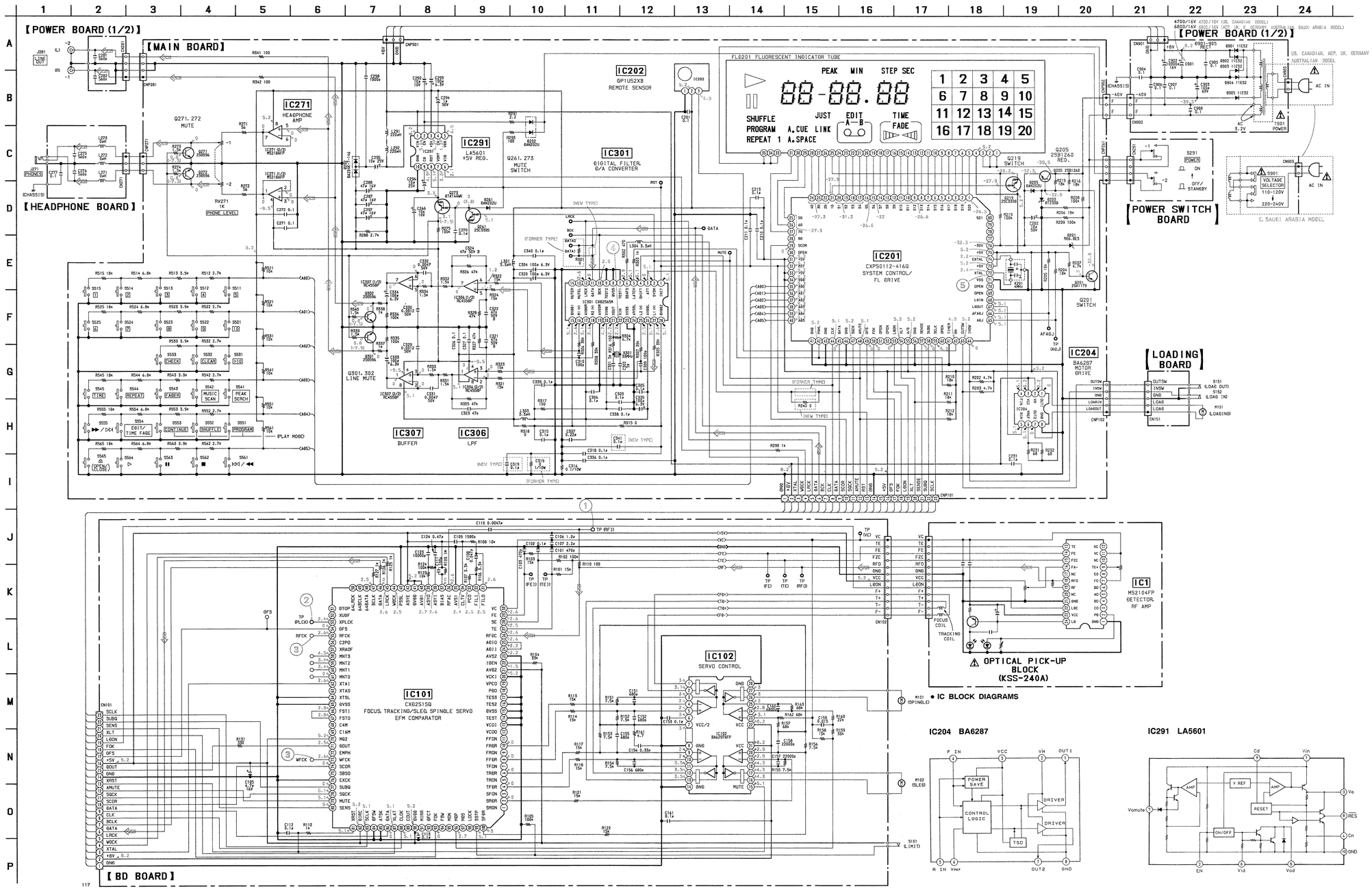

Note:

- All capacitors are in μF unless otherwise noted. pF: μμF 50WV or less are not indicated except for electrolytics and tantalums.
- All resistors are in Ω and ¼W or less unless otherwise specified.
- △ : internal component.

Note:	Note:
The components identified by mark ⚠ or dotted line with mark ⚠ are critical for safety. Replace only with part number specified.	Les composants identifiés par une marque ⚠ sont critiques pour la sécurité. Ne les remplacer que par une pièce portant le numéro spécifié.

- ▭▭▭ : B+ line.
- ▭▭▭ : B− line.
- Voltage and waveforms are dc with respect to ground under no -signal conditions.
  no mark : STOP
  ( ) : PLAY
- Voltages are taken with a VOM. (Input impedance 10MΩ)
  Voltage variations may be noted due to normal production tolerances.
- Waveforms are taken with a oscilloscope.
  Voltage variations may be noted due to normal production tolerances.
- Circled numbers refer to waveforms.
- Signal path.
  ⇨ : CD

5-4. PRINTED WIRING BOARDS (FORMER TYPE)

• Refer to page 28 for the Semiconductor Lead Layouts.

• **Semiconductor Location**

Ref. No.	Location
D201	H-2
D202	H-11
D203	H-2
D205	I-2
D261	H-11
D292	G-13
D901	B-8
D902	B-8
D903	B-9
D904	B-9
D905	B-9
IC201	I-4
IC202	J-9
IC204	H-3
IC271	J-15
IC291	H-12
IC301	H-7
IC306	H-9
IC307	H-9
Q201	H-3
Q205	I-3
Q219	J-3
Q261	H-10
Q271	H-15
Q272	H-15
Q273	H-11
Q301	H-10
Q302	H-10

Note:

- ■ : parts mounted on the conductor side.
- ● : Through hole.
- ▬ : Pattern on the side which is seen.

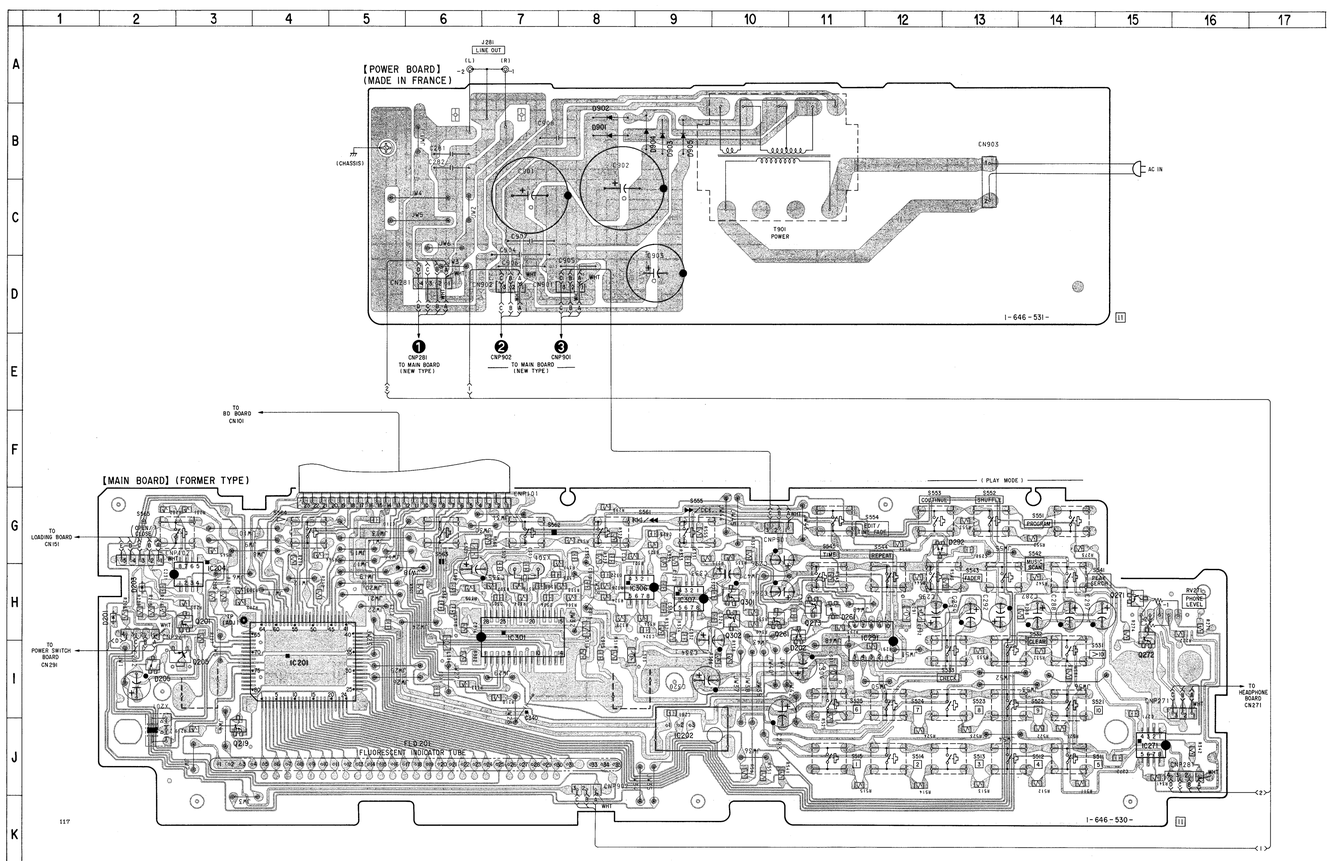

• **IC BLOCK DIAGRAMS**

IC201 CXD2515Q

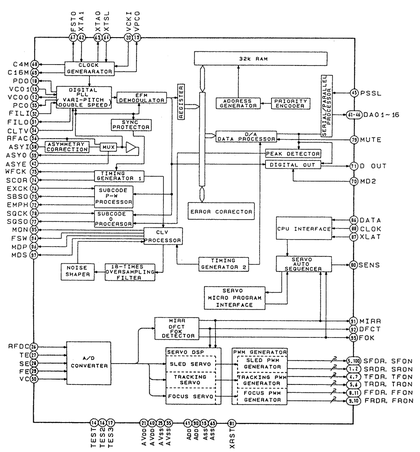

IC301 CXD2565M

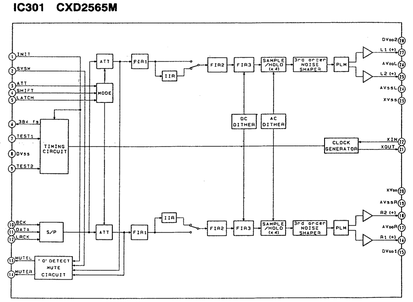

• **FLD201 FLUORESCENT INDICATOR**

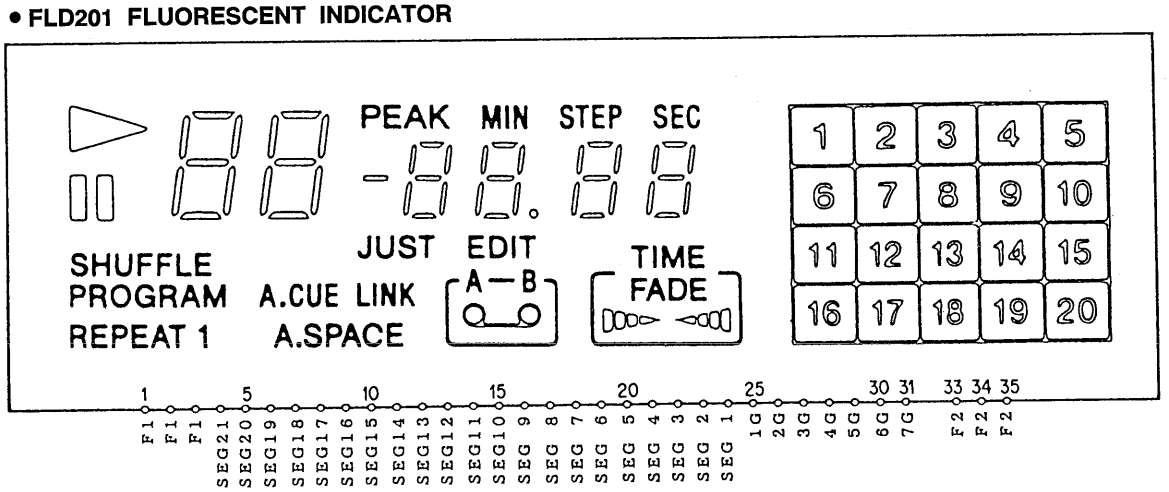

SEGMENT \ GRID	7G	6G	5G	4G	3G	2G	1G
SEG 1	▷		A. CUE				20
SEG 2	▯▯		A. SPACE			SEC	19
SEG 3	SHUFFLE		JUST	MIN			18
SEG 4	PROGRAM		LINK	∘	STEP		17
SEG 5							16
SEG 6							15
SEG 7							14
SEG 8							13
SEG 9							12
SEG10							11
SEG11							10
SEG12							9
SEG13							8
SEG14							7
SEG15							6
SEG16							5
SEG17	REPEAT			A		▯▯▯▷	4
SEG18	1			B		◁▯▯▯	3
SEG19			▭	EDIT		TIME	2
SEG20			PEAK	A—B		FADE	1
SEG21							▦

5-5. SEMICONDUCTOR LEAD LAYOUTS

BA6287F

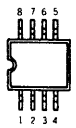

(TOP VIEW)

CP1U52XB

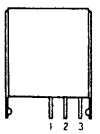

1 Vout
2 Vcc
3 GND

DTZ33B

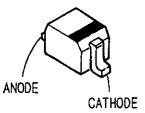

DTZ6.8C

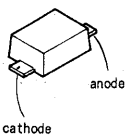

BA6297AFP

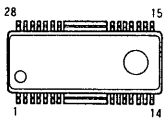

LA5601

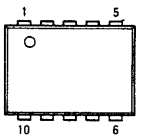

1SS226

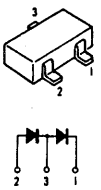

CXD2515Q

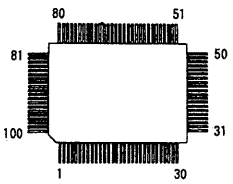

M5218AFP
RC4558PS

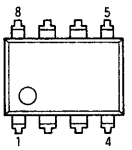

(TOP VIEW)

11ES2

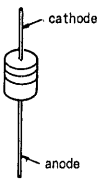

CXD2565M

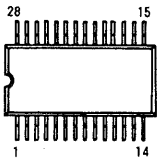

(TOP VIEW)

DTA114EK
DTC144EK
2SA1179-M5M6
2SB1260
2SC3395
2SC3398
2SD596DV345

CXP50112-416Q

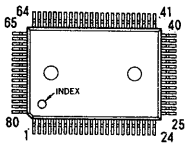

(TOP VIEW)

DAN202U

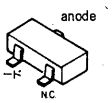

SECTION 6
EXPLODED VIEWS

NOTE:

- -XX,-X mean standardized parts, so they may have some difference from the original one.
- Color indication of Appearance Parts.
  Example:
  KNOB,BALANCE (WHITE) . . . (RED)
  ↑ Parts Color ↑ Cabinet's Color
- Items marked "*" are not stocked since they are seldom required for routine service. Some delay should be anticipated when ordering these items.
- The mechanical parts with no reference number in the exploded views are not supplied.
- Hardware (# mark) list is given in the last of this parts list.

The components identified by mark ⚠ or dotted line with mark ⚠ are critical for safety. Replace only with part number specified.
Les composants identifiés par une marque ⚠ sont critiques pour la sécurité. Ne les remplacer que par une pièce portant le numéro spécifié.

- Abbreviations
  AUS : Australian
  EA : Saudi Arabia
  G : Germany

6-1. FRONT PANEL SECTION

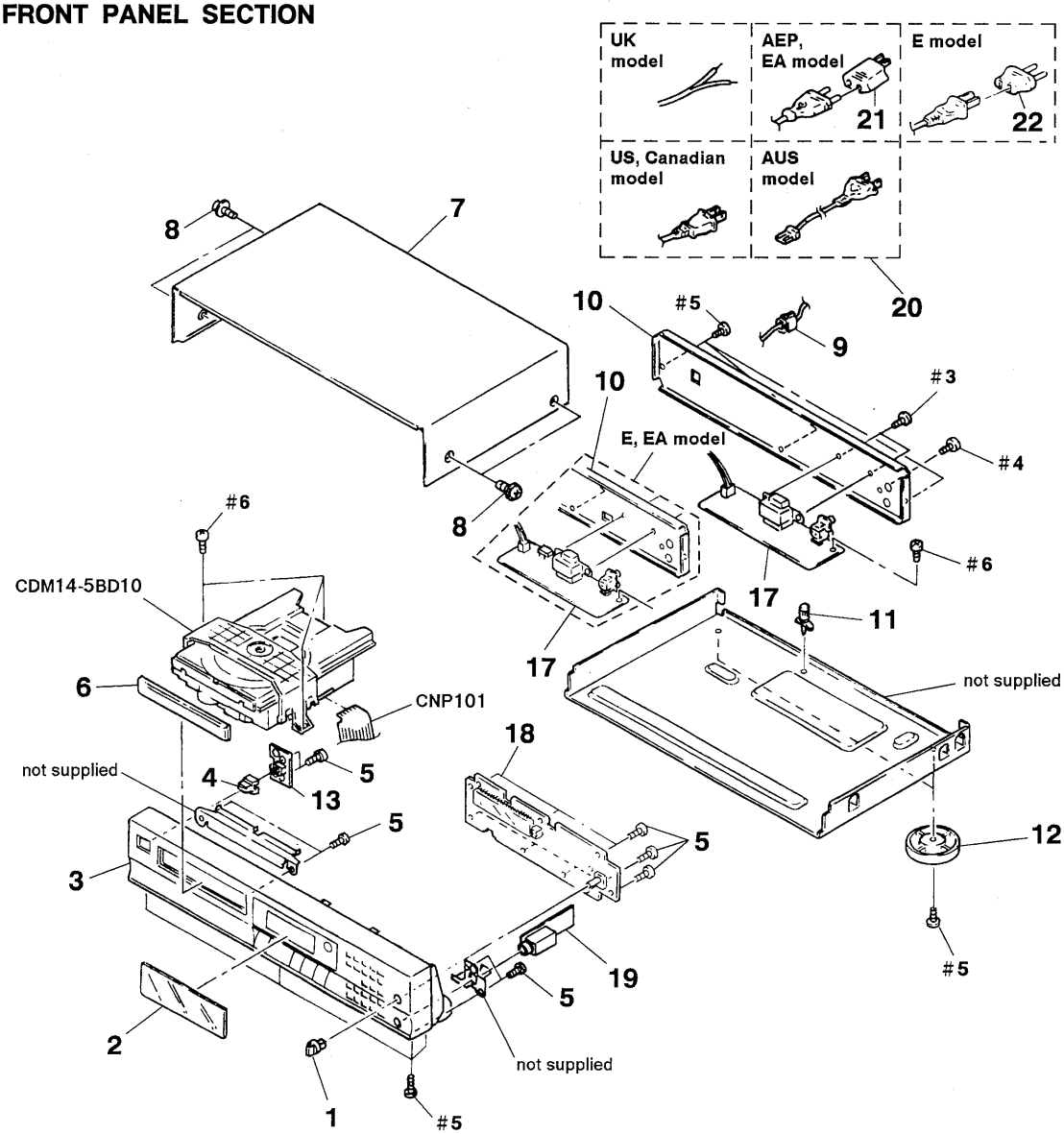

Ref. No.	Part No.	Description	Remark
1	4-925-014-01	KNOB (DIA. 10)	
2	4-954-928-01	PLATE, INDICATION (311)	
2	4-954-928-11	PLATE, INDICATION (211)	
3	X-4942-970-2	PANEL ASSY, FRONT (311:AEP, G, UK)	(MADE IN FRANCE)
3	X-4942-971-2	PANEL ASSY, FRONT (211:AEP, G, UK)	(MADE IN FRANCE)
3	X-4943-651-1	PANEL ASSY, FRONT (311:US, Canadian)	
3	X-4943-652-1	PANEL ASSY, FRONT (311:AEP, E, AUS, EA)	(MADE IN JAPAN)
3	X-4943-653-1	PANEL ASSY, FRONT (211:US, Canadian)	
3	X-4943-654-1	PANEL ASSY, FRONT (211:AEP, E, AUS, EA)	(MADE IN JAPAN)
4	4-947-034-01	BUTTON (POWER)	
5	4-951-620-01	SCREW (2. 6X8), +BVTP	
6	4-954-929-22	PANEL, LOADING (311)	
6	4-954-929-32	PANEL, LOADING (211)	
7	4-929-035-31	CASE (BAP SUMI)	
8	3-363-099-01	SCREW (CASE 3 TP2) (MADE IN FRANCE)	
8	3-704-366-31	SCREW (CASE) (M3X6) (MADE IN JAPAN)	
* 9	3-703-244-00	BUSHING (2104), CORD	(US, Canadian, AEP, G, AUS, EA)
* 9	3-703-571-11	BUSHING (S) (4516), CORD (E)	

Ref. No.	Part No.	Description	Remark
* 10	4-955-730-11	PANEL, BACK (311:US)	
* 10	4-955-730-21	PANEL, BACK (311:Canadian)	
* 10	4-955-730-33	PANEL, BACK (311:AEP) (MADE IN JAPAN)	
* 10	4-949-540-22	PANEL, BACK (311:AEP, G) (MADE IN FRANCE)	
* 10	4-949-540-12	PANEL, BACK (311:UK) (MADE IN FRANCE)	
* 10	4-955-730-41	PANEL, BACK (311:E, EA)	
* 10	4-955-730-51	PANEL, BACK (311:AUS)	
* 10	4-955-731-01	PANEL, BACK (211:US)	
* 10	4-955-731-11	PANEL, BACK (211:Canadian)	
* 10	4-955-731-23	PANEL, BACK (211:AEP) (MADE IN JAPAN)	
* 10	4-949-540-42	PANEL, BACK (211:AEP, G) (MADE IN FRANCE)	
* 10	4-949-540-31	PANEL, BACK (211:UK) (MADE IN FRANCE)	
* 10	4-955-731-31	PANEL, BACK (211:E, EA)	
* 10	4-955-731-41	PANEL, BACK (211:AUS)	
* 11	3-349-025-41	HOLDER, PC BOARD (MADE IN JAPAN)	
12	4-956-885-01	FOOT (F58175S2W) (US, Canadian)	
12	4-956-885-11	FOOT (F58175S2W) (AEP, UK, G, E, EA, AUS)	
* 13	1-648-083-11	POWER SW BOARD	
* 17	1-648-082-11	POWER BOARD (MADE IN JAPAN)	
* 17	1-646-531-11	POWER BOARD (MADE IN FRANCE)	
* 18	A-4649-513-A	MAIN BOARD, COMPLETE	
* 19	1-648-084-11	HEADPHONE BOARD	
⚠20	1-575-651-21	CORD, POWER (AEP, G, EA)	
⚠20	1-590-836-11	CORD, POWER (US, Canadian)	
⚠20	1-696-027-11	CORD, POWER (E)	
⚠20	1-696-845-11	CORD, POWER (AUS)	
⚠20	1-696-907-11	CORD, POWER (UK)	
21	1-569-008-11	ADAPTER, CONVERSION 2P (EA)	
22	1-569-007-11	ADAPTER, CONVERSION 2P (E)	
CNP101	1-537-472-11	JUMPER, FILM (WITH TERMINAL)	

Note: The components identified by mark ⚠ or dotted line with mark ⚠ are critical for safety. Replace only with part number specified.	**Note:** Les composants identifiés par une marque ⚠ sont critiques pour la sécurité. Ne les remplacer que par une pièce portant le numéro spécifié.

6-2. CD MECHANISM SECTION (CDM14-5BD10)

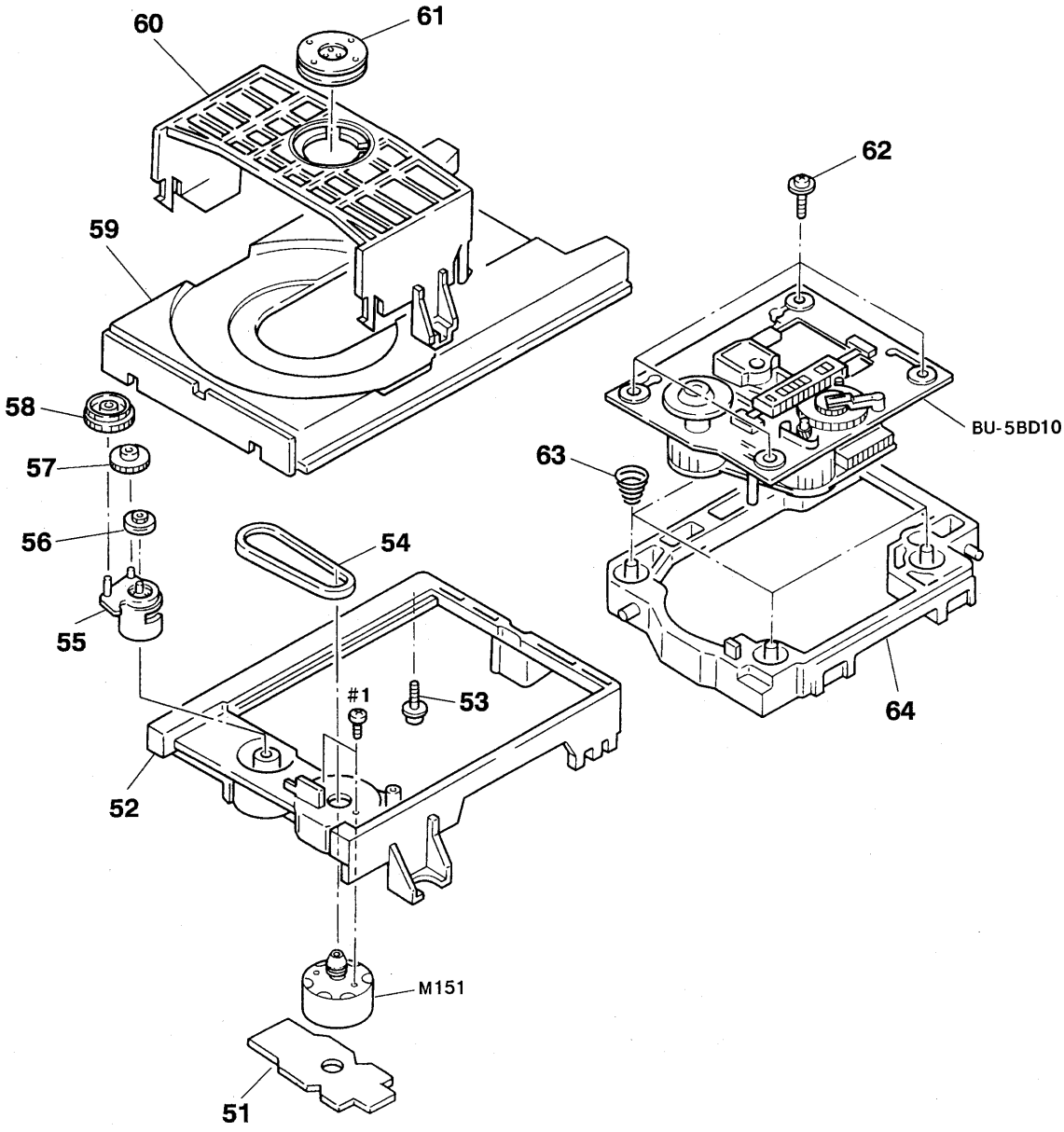

Ref. No.	Part No.	Description	Remark
* 51	1-645-721-11	LOADING BOARD	
52	4-933-111-01	CHASSIS (MD) (MADE IN JAPAN)	
52	4-933-111-11	CHASSIS (MD) (MADE IN FRANCE)	
* 53	4-917-583-21	BRACKET, YOKE	
54	4-927-649-01	BELT	
55	4-933-109-01	CAM	
56	4-927-651-01	PULLEY (S)	
57	4-927-628-01	GEAR (C)	
58	4-933-107-01	GEAR (PL)	
59	4-933-112-01	TABLE, DISK (MADE IN JAPAN)	
59	4-933-112-11	TABLE, DISK (MADE IN FRANCE)	

Ref. No.	Part No.	Description	Remark
60	4-933-110-01	HOLDER (MG) (MADE IN JAPAN)	
60	4-933-110-11	HOLDER (MG) (MADE IN FRANCE)	
* 61	1-452-538-11	MAGNET	
62	4-933-134-01	SCREW (+PTPWH M2.6X6)	
63	4-948-503-01	SPRING (BU), COMPRESSION	
64	4-933-129-01	HOLDER (BU) (MADE IN JAPAN)	
64	4-933-129-12	HOLDER (BU) (MADE IN FRANCE)	
M151	A-4604-363-A	MOTOR (L) ASSY (LOADING)	

6-3. OPTICAL PICK-UP BLOCK (BU-5BD10)

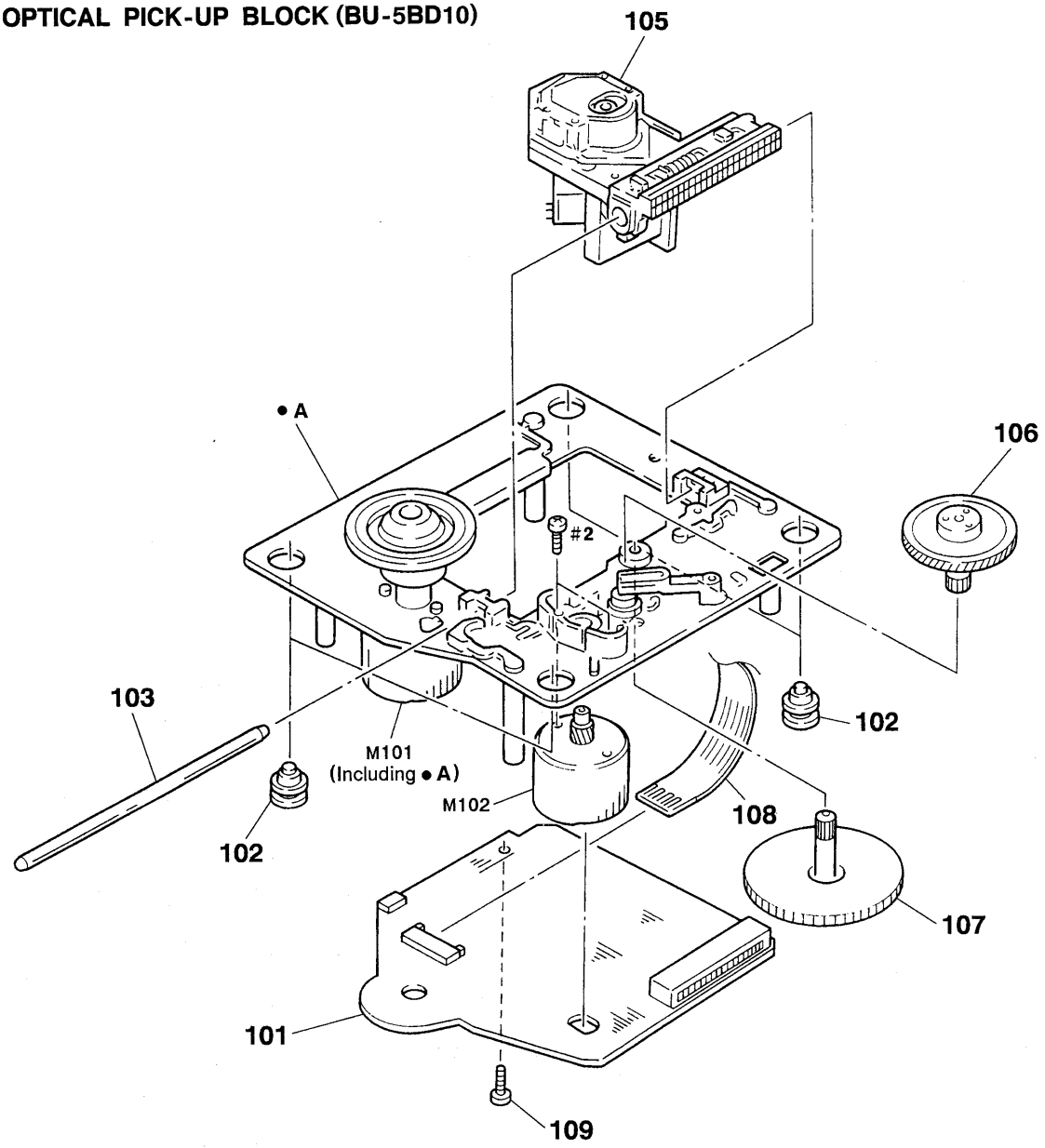

Ref. No.	Part No.	Description	Remark
* 101	A-4649-432-A	BD BOARD, COMPLETE	
102	4-933-126-01	INSULATOR (A)	
103	4-917-565-01	SHAFT, SLED	
⚠105	8-848-144-11	DEVICE, OPTICAL KSS-240A	
106	4-917-567-01	GEAR (M)	
107	4-917-564-01	GEAR (P), FLATNESS	
108	1-575-001-11	WIRE, FLAT TYPE (12 CORE)	
109	4-951-620-01	SCREW (2.6X8), +BVTP	
M101	X-4917-523-3	MOTOR ASSY (SPINDLE)	
M102	X-4917-504-1	MOTOR ASSY (SLED)	

Note:	Note:
The components identified by mark ⚠ or dotted line with mark ⚠ are critical for safety. Replace only with part number specified.	Les composants identifiés par une marque ⚠ sont critiques pour la sécurité. Ne les remplacer que par une pièce portant le numéro spécifié.

SECTION 7
ELECTRICAL PARTS LIST

BD

NOTE:
- Due to standardization, replacements in the parts list may be different from the parts specified in the diagrams or the components used on the set.
- -XX and -X mean standardized parts, so they may have some difference from the original one.
- RESISTORS
  All resistors are in ohms.
  METAL:Metal-film resistor.
  METAL OXIDE: Metal oxide-film resistor.
  F:nonflammable
- Model name
  311:CDP-311
  211:CDP-211
- Abbreviations
  AUS:Australian
  EA:Saudi Arabia
  G:Germany
- Items marked "*" are not stocked since they are seldom required for routine service. Some delay should be anticipated when ordering these items.
- SEMICONDUCTORS
  In each case, u:μ, for example:
  uA..: μA.. uPA..: μPA..
  uPB..: μPB.. uPC..: μPC.. uPD..: μPD..
- CAPACITORS
  uF: μF
- COILS
  uH: μH

When indicating parts by reference number, please include the board.

The components identified by mark ⚠ or dotted line with mark. ⚠ are critical for safety. Replace only with part number specified.

Les composants identifiés par une marque ⚠ sont critiques pour la sécurité.
Ne les remplacer que par une pièce portant le numéro spécifié.

Ref. No.	Part No.	Description				Remark
*	A-4649-432-A	BD BOARD, COMPLETE				
		**********				
		< CAPACITOR >				
C101	1-163-005-11	CERAMIC CHIP	470PF	10%	50V	
C102	1-163-038-00	CERAMIC CHIP	0.1uF		25V	
C103	1-163-005-11	CERAMIC CHIP	470PF	10%	50V	
C105	1-135-155-21	TANTALUM CHIP	4.7uF	10%	16V	
C106	1-164-346-11	CERAMIC CHIP	1uF		16V	
C107	1-164-505-11	CERAMIC CHIP	2.2uF		16V	
C108	1-163-035-00	CERAMIC CHIP	0.047uF		50V	
C109	1-163-011-11	CERAMIC CHIP	0.0015uF	10%	50V	
C110	1-163-017-00	CERAMIC CHIP	0.0047uF	5%	50V	
C111	1-163-251-11	CERAMIC CHIP	100PF	5%	50V	
C112	1-163-038-00	CERAMIC CHIP	0.1uF		25V	
C113	1-163-038-00	CERAMIC CHIP	0.1uF		25V	
C123	1-164-232-11	CERAMIC CHIP	0.01uF		50V	
C124	1-164-005-11	CERAMIC CHIP	0.47uF		25V	
C151	1-163-007-11	CERAMIC CHIP	680PF	10%	50V	
C152	1-163-007-11	CERAMIC CHIP	680PF	10%	50V	
C153	1-163-038-00	CERAMIC CHIP	0.1uF		25V	
C154	1-164-336-11	CERAMIC CHIP	0.33uF		25V	
C155	1-163-007-11	CERAMIC CHIP	680PF	10%	50V	
C156	1-163-007-11	CERAMIC CHIP	680PF	10%	50V	
C157	1-163-033-00	CERAMIC CHIP	0.022uF		50V	
C158	1-163-033-00	CERAMIC CHIP	0.022uF		50V	
C159	1-163-023-00	CERAMIC CHIP	0.015uF	5%	50V	
C160	1-163-019-00	CERAMIC CHIP	0.0068uF	10%	50V	
C161	1-163-038-00	CERAMIC CHIP	0.1uF		25V	
		< CONNECTOR >				
* CN101	1-568-865-11	SOCKET, CONNECTOR 23P				
CN102	1-568-795-11	SOCKET, CONNECTOR 12P				
		< IC >				
IC101	8-752-351-94	IC CXD2515Q				
IC102	8-759-071-79	IC BA6297AFP				

Ref. No.	Part No.	Description				Remark
		< RESISTOR >				
R101	1-216-077-00	METAL CHIP	15K	5%	1/10W	
R102	1-216-097-00	METAL CHIP	100K	5%	1/10W	
R103	1-216-077-00	METAL CHIP	15K	5%	1/10W	
R104	1-216-085-00	METAL CHIP	33K	5%	1/10W	
R105	1-216-097-00	METAL CHIP	100K	5%	1/10W	
R106	1-216-061-00	METAL CHIP	3.3K	5%	1/10W	
R107	1-216-061-00	METAL CHIP	3.3K	5%	1/10W	
R108	1-216-073-00	METAL CHIP	10K	5%	1/10W	
R109	1-216-121-00	METAL CHIP	1M	5%	1/10W	
R110	1-216-025-00	METAL CHIP	100	5%	1/10W	
R112	1-216-049-00	METAL CHIP	1K	5%	1/10W	
R113	1-216-077-00	METAL CHIP	15K	5%	1/10W	
R114	1-216-077-00	METAL CHIP	15K	5%	1/10W	
R117	1-216-077-00	METAL CHIP	15K	5%	1/10W	
R118	1-216-077-00	METAL CHIP	15K	5%	1/10W	
R121	1-216-077-00	METAL CHIP	15K	5%	1/10W	
R122	1-216-077-00	METAL CHIP	15K	5%	1/10W	
R123	1-216-073-00	METAL CHIP	10K	5%	1/10W	
R124	1-216-097-00	METAL CHIP	100K	5%	1/10W	
R125	1-216-049-00	METAL CHIP	1K	5%	1/10W	
R126	1-216-049-00	METAL CHIP	1K	5%	1/10W	
R127	1-216-049-00	METAL CHIP	1K	5%	1/10W	
R131	1-216-037-00	METAL CHIP	330	5%	1/10W	
R151	1-216-070-00	METAL CHIP	7.5K	5%	1/10W	
R152	1-216-070-00	METAL CHIP	7.5K	5%	1/10W	
R153	1-216-070-00	METAL CHIP	7.5K	5%	1/10W	
R154	1-216-070-00	METAL CHIP	7.5K	5%	1/10W	
R155	1-216-070-00	METAL CHIP	7.5K	5%	1/10W	
R156	1-216-070-00	METAL CHIP	7.5K	5%	1/10W	
R157	1-216-093-00	METAL CHIP	68K	5%	1/10W	
R158	1-216-076-00	METAL CHIP	13K	5%	1/10W	
R159	1-216-085-00	METAL CHIP	33K	5%	1/10W	
R160	1-216-081-00	METAL CHIP	22K	5%	1/10W	
R161	1-216-308-00	METAL CHIP	4.7	5%	1/10W	
R162	1-216-093-00	METAL CHIP	68K	5%	1/10W	
R163	1-216-093-00	METAL CHIP	68K	5%	1/10W	
		< SWITCH >				
S101	1-572-085-11	SWITCH, LEAF (LIMIT)				

****

HEADPHONE LOADING MAIN

Ref. No.	Part No.	Description			Remark
*	1-648-084-11	HEADPHONE BOARD			
		**********			
		< CAPACITOR >			
C275	1-162-291-31	CERAMIC	560PF	10%	50V
C276	1-162-291-31	CERAMIC	560PF	10%	50V
C277	1-164-159-11	CERAMIC	0.1uF		50V
		< CONNECTOR >			
* CN271	1-568-941-11	PIN, CONNECTOR 3P			
		< JACK >			
J271	1-568-519-41	JACK, LARGE TYPE (PHONES)			
		< COIL >			
L271	1-412-473-21	INDUCTOR	0uH		
L272	1-412-473-21	INDUCTOR	0uH		
L273	1-412-473-21	INDUCTOR	0uH		

****

Ref. No.	Part No.	Description			Remark
*	1-645-721-11	LOADING BOARD			
		**********			
		< CONNECTOR >			
* CN151	1-568-943-11	PIN, CONNECTOR 5P			
		< SWITCH >			
S151	1-572-086-11	SWITCH, LEAF (LOAD OUT)			
S152	1-572-086-11	SWITCH, LEAF (LOAD IN)			

****

Ref. No.	Part No.	Description			Remark
*	A-4649-513-A	MAIN BOARD, COMPLETE			
		**********			
		< CAPACITOR >			
C201	1-163-038-00	CERAMIC CHIP	0.1uF		25V
C202	1-124-261-00	ELECT	10uF	20%	50V
C210	1-163-038-00	CERAMIC CHIP	0.1uF		25V
C211	1-163-038-00	CERAMIC CHIP	0.1uF		25V
C213	1-163-038-00	CERAMIC CHIP	0.1uF		25V
C231	1-163-038-00	CERAMIC CHIP	0.1uF		25V
C266	1-126-157-11	ELECT	10uF	20%	16V
C270	1-163-038-00	CERAMIC CHIP	0.1uF		25V
C271	1-163-038-00	CERAMIC CHIP	0.1uF		25V
C272	1-163-038-00	CERAMIC CHIP	0.1uF		25V
C287	1-124-589-11	ELECT	47uF	20%	16V
C288	1-124-589-11	ELECT	47uF	20%	16V
C292	1-126-157-11	ELECT	10uF	20%	16V
C293	1-124-584-00	ELECT	100uF	20%	10V
C294	1-126-160-11	ELECT	1uF	20%	50V
C295	1-126-096-11	ELECT	10uF	20%	35V
C296	1-126-096-11	ELECT	10uF	20%	35V
C297	1-124-589-11	ELECT	47uF	20%	16V
C298	1-163-275-11	CERAMIC CHIP	0.001uF	5%	50V
C301	1-163-088-00	CERAMIC CHIP	5PF		50V
C302	1-163-088-00	CERAMIC CHIP	5PF		50V
C303	1-163-038-00	CERAMIC CHIP	0.1uF		25V
C304	1-124-584-00	ELECT	100uF	20%	10V
C305	1-163-038-00	CERAMIC CHIP	0.1uF		25V
C306	1-163-038-00	CERAMIC CHIP	0.1uF		25V
C309	1-163-251-11	CERAMIC CHIP	100PF	5%	50V
C310	1-163-251-11	CERAMIC CHIP	100PF	5%	50V
C315	1-163-038-00	CERAMIC CHIP	0.1uF		25V
C318	1-163-038-00	CERAMIC CHIP	0.1uF		25V
C319	1-163-038-00	CERAMIC CHIP	0.1uF	25V (NEW TYPE)	
C320	1-124-584-00	ELECT	100uF	20%	10V
C321	1-163-243-11	CERAMIC CHIP	47PF	5%	50V
C322	1-163-243-11	CERAMIC CHIP	47PF	5%	50V
C323	1-163-243-11	CERAMIC CHIP	47PF	5%	50V
C324	1-163-243-11	CERAMIC CHIP	47PF	5%	50V
C326	1-163-038-00	CERAMIC CHIP	0.1uF		25V
C327	1-163-038-00	CERAMIC CHIP	0.1uF		25V
C329	1-163-143-00	CERAMIC CHIP	0.0012uF	5%	50V
C330	1-163-143-00	CERAMIC CHIP	0.0012uF	5%	50V
C331	1-163-017-00	CERAMIC CHIP	0.0047uF	5%	50V
C332	1-163-017-00	CERAMIC CHIP	0.0047uF	5%	50V
C333	1-124-584-00	ELECT	100uF	20%	10V
C334	1-124-584-00	ELECT	100uF	20%	10V
C335	1-124-584-00	ELECT	100uF	20%	10V
C336	1-163-038-00	CERAMIC CHIP	0.1uF		25V
C337	1-163-081-00	CERAMIC CHIP	0.22uF		25V
C338	1-163-038-00	CERAMIC CHIP	0.1uF		25V
C339	1-163-038-00	CERAMIC CHIP	0.1uF		25V
C340	1-130-495-00	MYLAR	0.1uF	5%	50V (FORMER TYPE)
C340	1-163-038-00	CERAMIC CHIP	0.1uF	25V(NEW TYPE)	
C341	1-163-038-00	CERAMIC CHIP	0.1uF	25V(NEW TYPE)	
		< RESISTOR >			
C316	1-216-295-00	METAL CHIP	0	5%	1/10W
C319	1-216-295-00	METAL CHIP	0	5%	1/10W (FORMAR TYPE)
		< FILM JUMPER >			
CNP101	1-537-472-11	JUMPER, FILM (WITH TERMINAL)			

Ref. No.	Part No.	Description		Remark
		< DIODE >		
D201	8-719-977-13	DIODE	DTZ6.8C	
D202	8-719-941-86	DIODE	DAN202U	
D203	8-719-977-81	DIODE	DTZ33B	
D205	8-719-941-86	DIODE	DAN202U	
D261	8-719-941-86	DIODE	DAN202U	
D292	8-719-800-76	DIODE	1SS226	
		< FLUORESCENT INDICATOR >		
FLD201	1-519-752-11	INDICATOR TUBE, FLUORESCENT		
		< IC >		
IC201	8-752-838-06	IC	CXP50112-416Q	
IC202	8-749-920-83	IC	GP1U52XB	
IC204	8-759-040-83	IC	BA6287F	
IC271	8-759-636-55	IC	M5218AFP	
IC291	8-759-821-93	IC	LA5601	
IC301	8-752-355-45	IC	CXD2565M	
IC306	8-759-996-43	IC	RC4558PS	
IC307	8-759-996-43	IC	RC4558PS	
		< COIL >		
L291	1-410-658-31	INDUCTOR CHIP	220uH	
L292	1-410-658-31	INDUCTOR CHIP	220uH	
L301	1-410-375-11	INDUCTOR CHIP	3.3uH	
L303	1-410-375-11	INDUCTOR CHIP	3.3uH	
L304	1-410-375-11	INDUCTOR CHIP	3.3uH	
		< TRANSISTOR >		
Q201	8-729-820-76	TRANSISTOR	2SA1179-M5M6	
Q205	8-729-019-72	TRANSISTOR	2SB1260	
Q219	8-729-805-41	TRANSISTOR	2SC3398	
Q261	8-729-901-01	TRANSISTOR	DTC144EK	
Q271	8-729-141-75	TRANSISTOR	2SD596DV345	
Q272	8-729-141-75	TRANSISTOR	2SD596DV345	
Q273	8-729-900-99	TRANSISTOR	DTA144WK	
Q301	8-729-141-75	TRANSISTOR	2SD596DV345	
Q302	8-729-141-75	TRANSISTOR	2SD596DV345	
		< RESISTOR >		
R202	1-216-065-00	METAL CHIP	4.7K 5% 1/10W	
R203	1-216-065-00	METAL CHIP	4.7K 5% 1/10W	
R204	1-216-079-00	METAL CHIP	18K 5% 1/10W	
R205	1-216-079-00	METAL CHIP	18K 5% 1/10W	
R206	1-216-079-00	METAL CHIP	18K 5% 1/10W	
R207	1-216-065-00	METAL CHIP	4.7K 5% 1/10W	
R208	1-216-097-00	METAL CHIP	100K 5% 1/10W	
R209	1-216-097-00	METAL CHIP	100K 5% 1/10W	
R210	1-216-079-00	METAL CHIP	18K 5% 1/10W	
R211	1-216-079-00	METAL CHIP	18K 5% 1/10W	
R212	1-216-079-00	METAL CHIP	18K 5% 1/10W	
R215	1-216-079-00	METAL CHIP	18K 5% 1/10W	
R216	1-216-079-00	METAL CHIP	18K 5% 1/10W	
R219	1-216-097-00	METAL CHIP	100K 5% 1/10W	
R231	1-216-021-00	METAL CHIP	68 5% 1/10W	
R232	1-216-021-00	METAL CHIP	68 5% 1/10W	
R240	1-216-295-00	METAL CHIP	0 5% 1/10W	(NEW TYPE)
R271	1-216-019-00	METAL CHIP	56 5% 1/10W	
R272	1-216-019-00	METAL CHIP	56 5% 1/10W	
R273	1-216-053-00	METAL CHIP	1.5K 5% 1/10W	
R274	1-216-053-00	METAL CHIP	1.5K 5% 1/10W	
R275	1-216-097-00	METAL CHIP	100K 5% 1/10W	
R288	1-216-059-00	METAL CHIP	2.7K 5% 1/10W	
R291	1-216-298-00	METAL CHIP	2.2 5% 1/10W	
R293	1-216-025-00	METAL CHIP	100 5% 1/10W	
R299	1-216-049-00	METAL CHIP	1K 5% 1/10W	
R301	1-216-295-00	METAL CHIP	0 5% 1/10W	(FORMER TYPE)
R302	1-216-041-00	METAL CHIP	470 5% 1/10W	
R303	1-216-049-00	METAL CHIP	1K 5% 1/10W	
R304	1-216-065-00	METAL CHIP	4.7K 5% 1/10W	
R305	1-216-689-11	METAL CHIP	39K 0.5% 1/10W	
R306	1-216-689-11	METAL CHIP	39K 0.5% 1/10W	
R307	1-216-689-11	METAL CHIP	39K 0.5% 1/10W	
R308	1-216-689-11	METAL CHIP	39K 0.5% 1/10W	
R315	1-216-296-00	METAL CHIP	0 5% 1/8W	
R316	1-216-025-00	METAL CHIP	100 5% 1/10W	
R317	1-216-025-00	METAL CHIP	100 5% 1/10W	
R318	1-216-295-00	METAL CHIP	0 5% 1/10W	
R321	1-216-077-00	METAL CHIP	15K 5% 1/10W	
R322	1-216-077-00	METAL CHIP	15K 5% 1/10W	
R323	1-216-077-00	METAL CHIP	15K 5% 1/10W	
R324	1-216-077-00	METAL CHIP	15K 5% 1/10W	
R325	1-216-089-00	METAL CHIP	47K 5% 1/10W	
R326	1-216-089-00	METAL CHIP	47K 5% 1/10W	
R327	1-216-089-00	METAL CHIP	47K 5% 1/10W	
R328	1-216-089-00	METAL CHIP	47K 5% 1/10W	
R331	1-216-053-00	METAL CHIP	1.5K 5% 1/10W	
R332	1-216-053-00	METAL CHIP	1.5K 5% 1/10W	
R333	1-216-053-00	METAL CHIP	1.5K 5% 1/10W	
R334	1-216-053-00	METAL CHIP	1.5K 5% 1/10W	
R335	1-216-097-00	METAL CHIP	100K 5% 1/10W	
R336	1-216-097-00	METAL CHIP	100K 5% 1/10W	
R337	1-216-049-00	METAL CHIP	1K 5% 1/10W	
R338	1-216-049-00	METAL CHIP	1K 5% 1/10W	
R339	1-216-053-00	METAL CHIP	1.5K 5% 1/10W	
R340	1-216-053-00	METAL CHIP	1.5K 5% 1/10W	

MAIN POWER

Ref. No.	Part No.	Description				Remark
R341	1-216-025-00	METAL CHIP	100	5%	1/10W	
R342	1-216-025-00	METAL CHIP	100	5%	1/10W	
R511	1-216-073-00	METAL CHIP	10K	5%	1/10W	
R512	1-216-059-00	METAL CHIP	2.7K	5%	1/10W	
R513	1-216-063-00	METAL CHIP	3.9K	5%	1/10W	
R514	1-216-069-00	METAL CHIP	6.8K	5%	1/10W	
R515	1-216-079-00	METAL CHIP	18K	5%	1/10W	
R521	1-216-073-00	METAL CHIP	10K	5%	1/10W	
R522	1-216-059-00	METAL CHIP	2.7K	5%	1/10W	
R523	1-216-063-00	METAL CHIP	3.9K	5%	1/10W	
R524	1-216-069-00	METAL CHIP	6.8K	5%	1/10W	
R525	1-216-079-00	METAL CHIP	18K	5%	1/10W	
R531	1-216-073-00	METAL CHIP	10K	5%	1/10W	
R532	1-216-059-00	METAL CHIP	2.7K	5%	1/10W	
R533	1-216-063-00	METAL CHIP	3.9K	5%	1/10W	
R541	1-216-073-00	METAL CHIP	10K	5%	1/10W	
R542	1-216-059-00	METAL CHIP	2.7K	5%	1/10W	
R543	1-216-063-00	METAL CHIP	3.9K	5%	1/10W	
R544	1-216-069-00	METAL CHIP	6.8K	5%	1/10W	
R545	1-216-079-00	METAL CHIP	18K	5%	1/10W	
R551	1-216-073-00	METAL CHIP	10K	5%	1/10W	
R552	1-216-059-00	METAL CHIP	2.7K	5%	1/10W	
R553	1-216-063-00	METAL CHIP	3.9K	5%	1/10W	
R554	1-216-069-00	METAL CHIP	6.8K	5%	1/10W	
R555	1-216-079-00	METAL CHIP	18K	5%	1/10W	
R561	1-216-073-00	METAL CHIP	10K	5%	1/10W	
R562	1-216-059-00	METAL CHIP	2.7K	5%	1/10W	
R563	1-216-063-00	METAL CHIP	3.9K	5%	1/10W	
R564	1-216-069-00	METAL CHIP	6.8K	5%	1/10W	
R565	1-216-079-00	METAL CHIP	18K	5%	1/10W	

< VARIABLE RESISTOR >

RV271	1-238-884-11	RES, VAR, CARBON 1K/1K (PHONE LEVEL)

< SWITCH >

S511	1-554-303-21	SWITCH, TACTILE (5)
S512	1-554-303-21	SWITCH, TACTILE (4)
S513	1-554-303-21	SWITCH, TACTILE (3)
S514	1-554-303-21	SWITCH, TACTILE (2)
S515	1-554-303-21	SWITCH, TACTILE (1)
S521	1-554-303-21	SWITCH, TACTILE (10)
S522	1-554-303-21	SWITCH, TACTILE (9)
S523	1-554-303-21	SWITCH, TACTILE (8)
S524	1-554-303-21	SWITCH, TACTILE (7)
S525	1-554-303-21	SWITCH, TACTILE (6)
S531	1-554-303-21	SWITCH, TACTILE (>10)
S532	1-554-303-21	SWITCH, TACTILE (CLEAR)
S533	1-554-303-21	SWITCH, TACTILE (CHECK)
S541	1-554-303-21	SWITCH, TACTILE (PEAK SEARCH)
S542	1-554-303-21	SWITCH, TACTILE (MUSIC SCAN)
S543	1-554-303-21	SWITCH, TACTILE (FADER)
S544	1-554-303-21	SWITCH, TACTILE (REPEAT)
S545	1-554-303-21	SWITCH, TACTILE (TIME)
S551	1-554-303-21	SWITCH, TACTILE (PROGRAM)
S552	1-554-303-21	SWITCH, TACTILE (SHUFFLE)
S553	1-554-303-21	SWITCH, TACTILE (CONTINUE)
S554	1-554-303-21	SWITCH, TACTILE (EDIT/TIME FADE)
S555	1-554-303-21	SWITCH, TACTILE (▶▶/⏭)
S561	1-554-303-21	SWITCH, TACTILE (⏮/◀◀)
S562	1-554-303-21	SWITCH, TACTILE (■)
S563	1-554-303-21	SWITCH, TACTILE (❚❚)
S564	1-554-303-21	SWITCH, TACTILE (▷)
S565	1-554-303-21	SWITCH, TACTILE (⏏ OPEN/CLOSE)

< VIBRATOR >

X201	1-577-358-21	VIBRATOR, CERAMIC (4MHz)
X301	1-579-833-21	VIBRATOR, CRYSTAL (33MHz)

****

*	1-646-531-11	POWER BOARD (MADE IN FRANCE)
*	1-648-082-11	POWER BOARD (MADE IN JAPAN)

****

< CAPACITOR >

C281	1-162-291-31	CERAMIC	560PF		10%	50V
C282	1-162-291-31	CERAMIC	560PF		10%	50V
C901	1-124-894-11	ELECT	6800uF	20%	16V	(AEP, UK, G, E, AUS, EA)
C901	1-126-937-11	ELECT	4700uF	20%	16V	(US, Canadian)
C902	1-126-939-11	ELECT	10000uF		20%	16V
C903	1-124-572-11	ELECT	100uF		20%	63V
C904	1-164-159-11	CERAMIC	0.1uF			50V
C905	1-164-159-11	CERAMIC	0.1uF			50V
C906	1-164-159-11	CERAMIC	0.1uF			50V
C907	1-164-159-11	CERAMIC	0.1uF			50V
C908	1-164-159-11	CERAMIC	0.1uF			50V

< CONNECTOR >

CN281	1-506-469-11	PIN, CONNECTOR 4P
CN901	1-506-468-11	PIN, CONNECTOR 3P
CN902	1-506-468-11	PIN, CONNECTOR 3P
* CN903	1-580-230-11	PIN, CONNECTOR (PC BOARD) 3P

Ref. No.	Part No.	Description	Remark
		< DIODE >	
D901	8-719-200-82	DIODE 11ES2	
D902	8-719-200-82	DIODE 11ES2	
D903	8-719-200-82	DIODE 11ES2	
D904	8-719-200-82	DIODE 11ES2	
D905	8-719-200-82	DIODE 11ES2	
		< JACK >	
J281	1-569-442-11	JACK, PIN 2P (LINE OUT)	
		< SWITCH >	
⚠S901	1-571-722-11	SWITCH, VOLTAGE SELECTION (VOLTAGE SELECTOR) (E, EA)	
		< TRANSFORMER >	
⚠T901	1-450-212-11	TRANSFORMER, POWER (US, Canadian)	
⚠T901	1-450-213-11	TRANSFORMER, POWER (AEP, UK, G, AUS)	
⚠T901	1-450-214-11	TRANSFORMER, POWER (E, EA)	

****

*	1-648-083-11	POWER SW BOARD	
		**********	
		< CONNECTOR >	
CN291	1-506-469-11	PIN, CONNECTOR 4P	
		< SWITCH >	
S291	1-554-118-00	SWITCH, PUSH (1 KEY) (POWER)	

****

		MISCELLANEOUS	
		**********	
⚠20	1-575-651-21	CORD, POWER (AEP, G, EA)	
⚠20	1-590-836-11	CORD, POWER (US, Canadian)	
⚠20	1-696-027-11	CORD, POWER (E)	
⚠20	1-696-845-11	CORD, POWER (AUS)	
⚠20	1-696-907-11	CORD, POWER (UK)	
21	1-569-008-11	ADAPTER, CONVERSION 2P (EA)	
22	1-569-007-11	ADAPTER, CONVERSION 2P (E)	
* 61	1-452-538-11	MAGNET	
⚠105	8-848-144-11	DEVICE, OPTICAL KSS-240A	
108	1-575-001-11	WIRE, FLAT TYPE (12 CORE)	
M101	X-4917-523-3	MOTOR ASSY (SPINDLE)	
M102	X-4917-504-1	MOTOR ASSY (SLED)	
M151	A-4604-363-A	MOTOR (L) ASSY (LOADING)	

****

Ref. No.	Part No.	Description	Remark
		ACCESSORIES & PACKING MATERIALS	
		**********	
	1-465-291-11	REMOTE COMMANDER (RM-D190) (311)	
	1-558-271-11	CORD, CONNECTION (MADE IN FRANCE)	
	1-559-533-11	CORD, CONNECTION (MADE IN JAPAN)	
	2-181-754-01	COVER, BATTERY (For RM-D190) (311)	
	3-756-199-11	MANUAL, INSTRUCTION (ENGLISH/FRENCH/SPANISH/CHINESE) (Canadian, AEP, E, AUS, EA) (MADE IN JAPAN)	
	3-756-199-21	MANUAL, INSTRUCTION (ENGLISH) (US) (MADE IN JAPAN)	
	3-756-199-41	MANUAL, INSTRUCTION (GERMAN/ITALIAN/DUTCH/PORTUGUESE) (AEP) (MADE IN JAPAN)	
	3-756-199-51	MANUAL, INSTRUCTION (ENGLISH/FRENCH/SPANISH) (AEP, UK) (MADE IN FRANCE)	
	3-756-199-61	MANUAL, INSTRUCTION (GERMAN/ITALIAN/DUTCH/PORTUGUESE) (AEP) (MADE IN FRANCE)	
	3-756-199-81	MANUAL, INSTRUCTION (GERMAN) (G) (MADE IN FRANCE)	
*	4-925-389-01	CUSHION (MADE IN JAPAN)	
*	4-929-506-01	CUSHION (MADE IN FRANCE)	
*	4-955-659-01	INDIVIDUAL CARTON (311) (MADE IN FRANCE)	
*	4-955-659-11	INDIVIDUAL CARTON (211) (MADE IN FRANCE)	
*	4-956-950-01	INDIVIDUAL CARTON (311) (MADE IN JAPAN)	
*	4-956-950-11	INDIVIDUAL CARTON (211) (MADE IN JAPAN)	

****

****

HARDWARE LIST

****

#1	7-621-775-10	SCREW +B 2.6X4
#2	7-621-255-15	SCREW +P 2X3
#3	7-682-562-09	SCREW +BVTT 4X10 (S)
#4	7-685-646-79	SCREW +BVTP 3X8 TYPE2 N-S
#5	7-682-548-09	SCREW +BVTT 3X8 (S)
#6	7-685-871-01	SCREW +BVTT 3X6 (S)

The components identified by mark ⚠ or dotted line with mark ⚠ are critical for safety. Replace only with part number specified.	Les composants identifiés par une marque ⚠ sont critiques pour la sécurité. Ne les remplacer que par une pièce portant le numéro spécifié.

9-957-772-11

Sony Corporation
Audio Group

English
93B06101-1
Printed in Japan
©1993.2
Published by Audio Corporate Planning Group