CDP-411/511/D7

SERVICE MANUAL

US Model
UK Model
CDP-411
Canadian Model
CDP-D7
E Model
AEP Model
Australian Model
CDP-411/511/D7

Photo:CDP-511

Model Name Using Similar Mechanism		New
CD Mechanism Type	411	CDM14-5BD10
	511	CDM25-5BD10
	D7	CDM14-5BD11
Optical Pick-Up Block Type	411	BU-5BD10
	511	BU-5BD10B
	D7	BU-5BD11

SPECIFICATIONS

Compact disc player

Laser	Semiconductor laser
Wavelength	780 – 790 nm
Frequency response	2 Hz to 20 kHz ±0.5 dB
Signal-to-noise ratio	CDP-411/D7: More than 102 dB CDP-511: More than 107 dB
Dynamic range	More than 98 dB
Harmonic distortion	CDP-411/D7: Less than 0.0035% CDP-511: Less than 0.003%
Channel separation	CDP-411/D7: More than 100 dB CDP-511: More than 102 dB

Outputs

LINE OUT (FIXED) (phono jacks)
Output level 2 V (at 50 kilohms)
Load impedance over 10 kilohms

LINE OUT (VARIABLE) (phono jacks) (except for non-European model CDP-411)
Output level max. 2 V (at 50 kilohms)
Load impedance over 50 kilohms

DIGITAL OUT (OPTICAL) (optical output connector)
Wave length 660 nm
Output level –18 dBm

PHONES (stereo phone jack)
Output level max. 10 mW
Load impedance 32 ohms

General

Power requirements	AEP model: 220 V – 230 V AC, 50/60 Hz Canadian model: 120 V AC, 60 Hz Australian model: 240 V AC, 50 Hz Other models: 110 – 120/220 – 240 V AC, adjustable with the voltage selector, 50/60 Hz
Power consumption	CDP-411/511: 12 W CDP-D7: 14 W
Dimensions (approx., including projections)	430 x 110 x 295 mm (w/h/d) (17 x 4 $^{3}/_{8}$ x 11 $^{5}/_{8}$ inches)
Mass (approx.)	CDP-411: 3.7 kg (8 lbs 3 oz) CDP-511/D7: 3.8 kg (8 lbs 6 oz)

Remote commander

Remote control system	Infrared control
Power requirements	3 V DC with two R6 (size AA) batteries
Dimensions (approx., including projections)	40 x 20 x 175 mm (w/h/d) (1 $^{5}/_{8}$ x $^{13}/_{16}$ x 7 inches)
Mass (approx.)	95 g (4 oz)

Supplied accessories

Audio cord	(1) (2 phono plugs – 2 phono plugs)
Remote commander	(1)
Sony SUM-3 (NS) batteries	(2)
Plug adaptor	(1) (except for European, Canadian, and Australian models)

Design and specifications are subject to change without notice.

COMPACT DISK PLAYER

SONY®

TABLE OF CONTENTS

Section	Title	Page
1. GENERAL		4
2. DISASSEMBLY		5
3. ELECTRICAL BLOCK CHECKING		6
4. DIAGRAMS		
4-1.	IC Block Diagram	8
4-2.	Printed Wiring Boards	11
4-3.	Schematic Diagram (1/2) – TYPE CDP-D7 –	15
4-4.	Schematic Diagram (1/2) – TYPE CDP-411/511 –	19
4-5.	Semiconductor Lead Layouts	22
4-6.	Schematic Diagram (2/2)	23
4-7.	IC Block Diagram	25
4-8.	Circuit Boards Location	26
4-9.	IC Description	27
5. EXPLODED VIEWS		
5-1.	Cabinet Section	32
5-2.	CD Mechanism Section (CDM14-5BD10/5BD11)	34
5-3.	CD Mechanism Section (CDM25-5BD10)	35
5-4.	Pic-Up Block 2 (BU-5BD10/5BD11/5BD10B)	36
6. ELECTRICAL PARTS LIST		37

MODEL IDENTIFICATION

— SPECIFICATION LABEL —

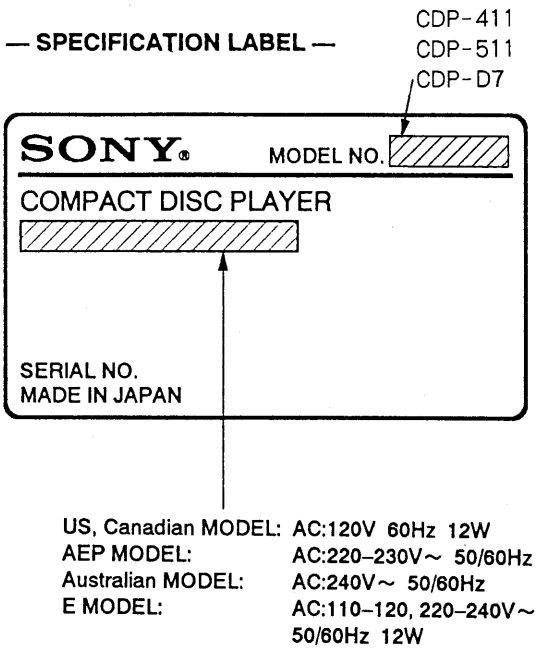

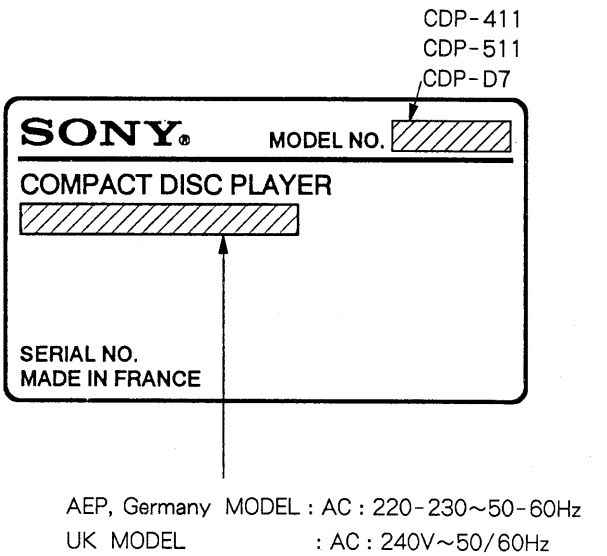

SAFETY CHECK-OUT

After correcting the original service problem, perform the following safty check before releasing the set to the customer:
Check the antenna terminals, metal trim, "metallized" knobs, screws, and all other exposed metal parts for AC leakage. Check leakage as described below.

LEAKAGE TEST

The AC leakage from any exposed metal part to earth ground and from all exposed metal part to any exposed metal part having a return to chassis, must not exceed 0.5 mA (500 microampers). Leakage current can be measured by any one of three methods.

1. A commercial leakage tester, such as the Simpson 229 or RCA WT-540A. Follow the manufacturers' instructions to use these instruments.
2. A battery-operated AC milliammeter. The Data Precision 245 digital multimeter is suitable for this job.
3. Measuring the voltage drop across a resistor by means of a VOM or battery-operated AC voltmeter. The "limit" indication is 0.75V, so analog meters must have an accurate low-voltage scale. The Simpson 250 and Sanwa SH-63Trd are examples of a passive VOM that is suitable. Nearly all battery operated digital multimeters that have a 2V AC range are suitable. (See Fig. A)

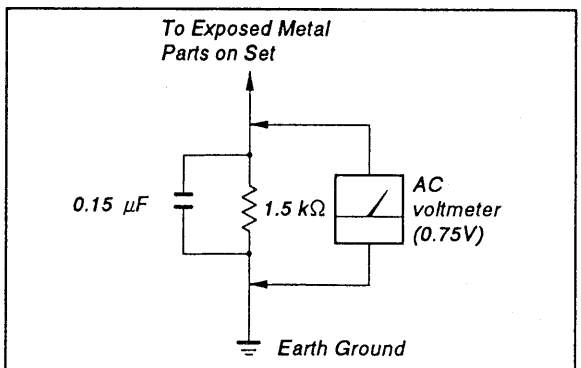

Fig. A. Using an AC voltmeter to check AC leakege.

SAFETY-RELATED COMPONENT WARNING!!

COMPONENTS IDENTIFIED BY MARK ⚠ OR DOTTED LINE WITH MARK ⚠ ON THE SCHEMATIC DIAGRAMS AND IN THE PARTS LIST ARE CRITICAL TO SAFE OPERATION. REPLACE THESE COMPONENTS WITH SONY PARTS WHOSE PART NUMBERS APPEAR AS SHOWN IN THIS MANUAL OR IN SUPPLEMENTS PUBLISHED BY SONY.

NOTES ON HANDLING THE OPTICAL PICK-UP BLOCK OR BASE UNIT

The laser diode in the optical pick-up block may suffer electrostatic breakdown because of the potential difference generated by the charged electrostatic load, etc. on clothing and the human body.
During repair, pay attention to electrostatic breakdown and also use the procedure in the printed matter which is included in the repair parts.
The flexible board is easily damaged and should be handled with care.

NOTES ON LASER DIODE EMISSION CHECK

The laser beam on this model is concentrated so as to be focused on the disc reflective surface by the objective lens in the optical pick-up block. Therefore, when checking the laser diode emission, observe more than 25 cm away from the objective lens.

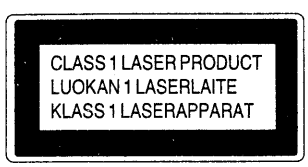

This appliance is classified as a CLASS 1 LASER product. The CLASS 1 LASER PRODUCT MARKING is located on the rear exterior.

The following caution label is located inside of the unit.

CAUTION	: INVISIBLE LASER RADIATION WHEN OPEN. AVOID EXPOSURE TO BEAM.
ADVARSEL	: USYNLIG LASERSTRÅLING VED ÅBNING NÅR SIKKERHEDSAFBRYDERE ER UDE AF FUNKTION. UNDGÅUDS ÆTTELSE FOR STRÅNING.
VAROI	: AVATTAESSA JA SUOJALUKITUS OHITETTAESSA DLET ALTTIINA LASERSÅTEILYLLE.
VARNING	: LASERSTRALING NAR DENNA DEL AR OPPNAD OCH SPÄRREN ÄR URXOPPLAD.
ADVARSEL	: USYNLIG LASERSTRÅLING NÅR DEKSEL ÅPNES UNNGA EKSPONERING FOR STRÅLEN.

For customers of the model equipped with the voltage selector
Check to confirm that the voltage selector is set to the local power line voltage. If not, set the voltage selector to the correct position before connecting the AC power cord to a wall outlet.

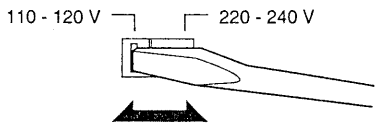

ATTENTION AU COMPOSANT AYANT RAPPORT À LA SÉCURITÉ!

LES COMPOSANTS IDENTIFIÉS PAR UNE MARQUE ⚠ SUR LES DIAGRAMMES SCHÉMATIQUES ET LA LISTE DES PIÈCES SONT CRITIQUES POUR LA SÉCURITÉ DE FONCTIONNEMENT. NE REMPLACER CES COMPOSANTS QUE PAR DES PIÈCES SONY DONT LES NUMÉROS SONT DONNÉS DANS CE MANUEL OU DANS LES SUPPLÉMENTS PUBLIÉS PAR SONY.

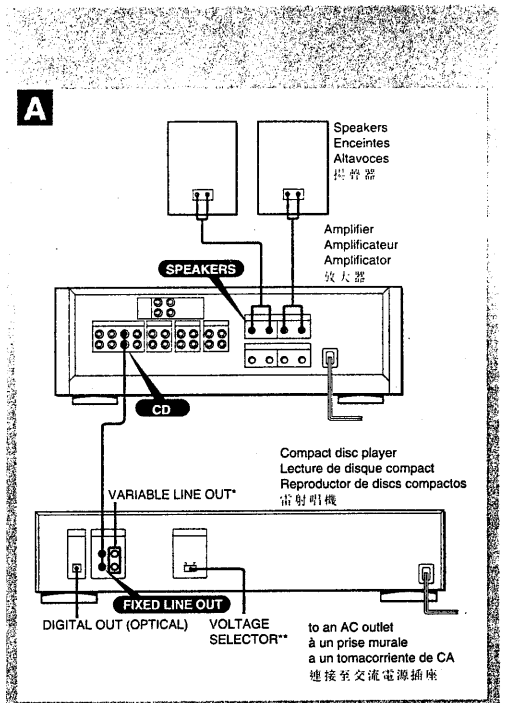

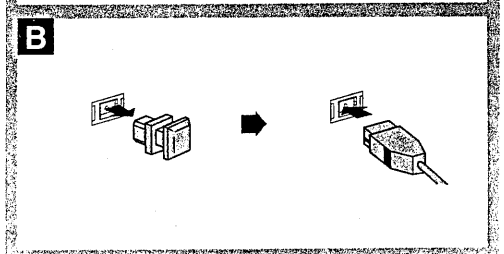

Hooking Up the System

Connect the unit to an amplifier as shown in Fig. A.

Notes on Connection

- Turn off the power of each unit before making connections. Connect the AC power cord last. For the model supplied with the plug adaptor, use it if the power cord plug does not match your wall outlet.
- Be sure to insert the plugs firmly into the jacks. Loose connections may cause hum and noise.
- Leave a little slack in the connecting cord to allow for inadvertent shock or vibration.
- The supplied audio cord plugs and jacks are color coded. Red plugs and jacks are for the right channel (R) and white ones are for the left channel (L).

* **VARIABLE LINE OUT jacks (except for non-European model CDP-411):**
Output level can be adjusted with the LINE OUT/PHONE LEVEL control (or LINE OUT LEVEL+/– on the remote commander RM-D597/D520).
If the LINE OUT/PHONE LEVEL control (or LINE OUT LEVEL +/– on the remote commander RM-D597/D520) is adjusted while recording, the recording level will change even though it is preset on the tape deck.

** **VOLTAGE SELECTOR:**
Not equipped with European, Canadian, and Australian models.

Connection to an Equipment with Digital Input B

When connecting to an amplifier or to a D/A converter with the OPTICAL IN jack, use the DIGITAL OUT (OPTICAL) jack instead of the LINE OUT jack. See the figure at the left.

Take off the cap and plug it in firmly.

Note on the DIGITAL OUT (OPTICAL) jack
When connecting with the DIGITAL OUT (OPTICAL) jack, use the POC-15 audio optical connecting cord (not supplied).
Note that when the DIGITAL OUT (OPTICAL) jack is connected, fade-in/fade-out, the time fade function, and DSP effect (only for CDP-D7) cannot be used. Moreover, you cannot adjust the DIGITAL OUT level with the LINE OUT/PHONE LEVEL (PHONE LEVEL on non-European model CDP-411) control (or LINE OUT LEVEL +/– on the remote commander RM-D597/D520).
Also note that there may be some noise when you play a CD software other than music (such as a CD-ROM).

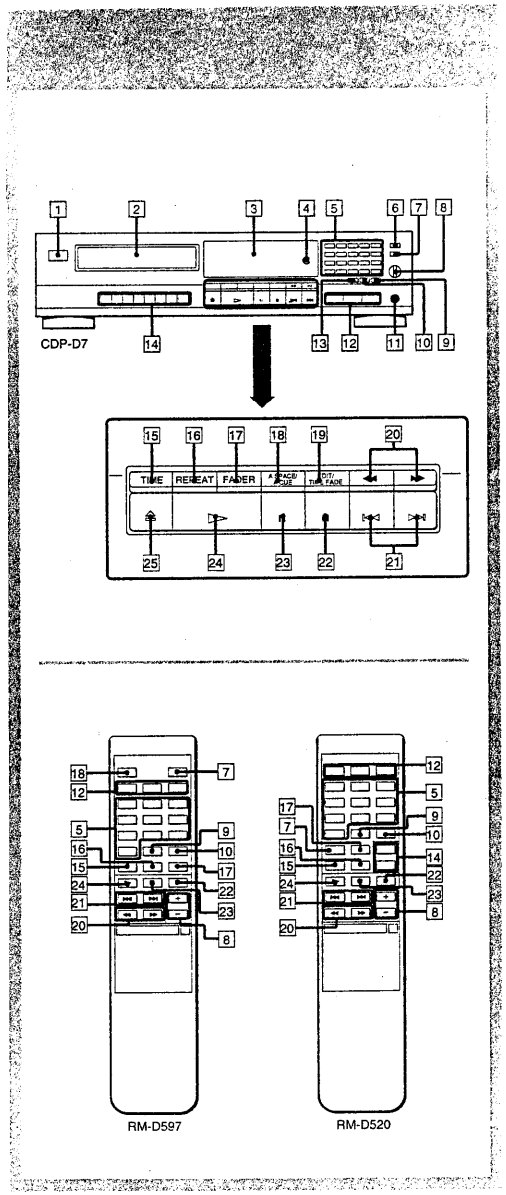

Identifying the Parts

Refer to the pages indicated in parentheses for details.

Front Panel/ Remote Commander

1. POWER switch (16)
2. Disc tray (16)
3. Display window (16)
4. Remote sensor
5. Numeric buttons (20, 32, 36, 48)
6. PEAK SEARCH button (56)
7. MUSIC SCAN button (42) (M.SCAN button on the remote commander RM-D520)
8. LINE OUT/PHONE LEVEL (PHONE LEVEL on non-European model CDP-411) control (12, 16) (LINE OUT LEVEL +/– buttons on the remote commander RM-D597/D520)
9. >20 (over 20) button (20) (>10 (over 10) button on the remote commander)
10. CLEAR (program clear) button (32, 34, 40)
11. PHONES jack
12. Play mode buttons
    CONTINUE button (30, 34)
    SHUFFLE button (30, 32, 34)
    PROGRAM button (36, 38)
13. CHECK (program check) button (38, 40)
14. DSP (digital signal processing) mode buttons (28) (only for CDP-D7) (DSP SELECT and DIRECT buttons on the remote commander RM-D520)
15. TIME button (18)
16. REPEAT button (44)
17. FADER button (46)
18. A.SPACE/A.CUE button (22, 24)
19. EDIT/TIME FADE button (48, 54)
20. ◀◀/▶▶ (manual search) buttons (20, 42, 46)
21. |◀◀/▶▶| (AMS*) buttons (20, 36, 50)
22. ■ (stop) button (16)
23. II (pause) button (16)
24. ▶ (play) button (16)
25. ⏏ OPEN/CLOSE button (16)

* AMS is the abbreviation of Automatic Music Sensor.

Note
As for the remote commander RM-D297, refer to the illustrations of the remote commander RM-D597. The arrangements of the buttons of the RM-D297 and RM-D597 are identical except that the RM-D297 does not have the LINE OUT LEVEL +/– buttons.

This section is extracted from instruction manual.

SECTION 2
DISASSEMBLY

NOTE : Follow the disassembly procedure in the numerical order given.

❶ Turn the cam to the direction of arrow (Counter clock wise) by minus screw driver.
❷ Take off the disc table.
❸ Remove the yoke bracket.
❹ Remove the MD (BU-5BD10/5BD10B/5BD11) to the direction of arrow.

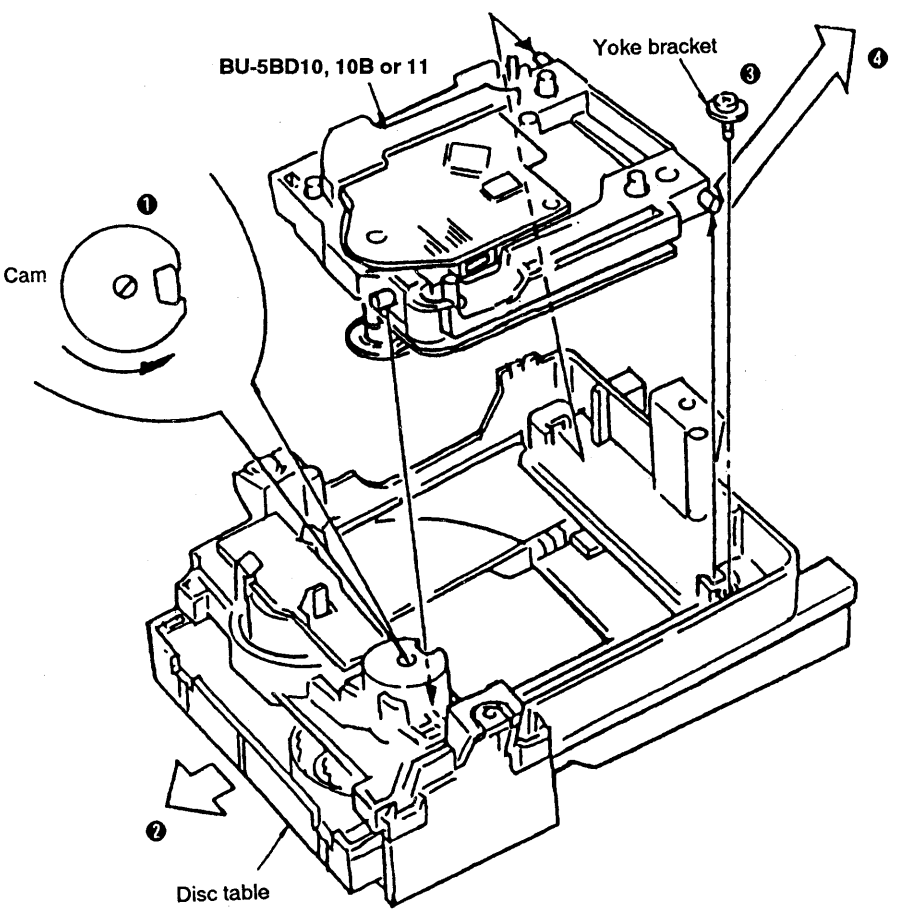

SECTION 3
ELECTRICAL BLOCK CHECKING

Note:

1. CD Block basically constructed to operate without adjustment. Therefore, check each item in order given.
2. Use YEDS-18 disc (3-702-101-01) unless otherwise indicated.
3. Use the oscilloscope with more than 10MΩ impedance.
4. Clean an object lens by an applicator with neutral detergent when the signal level is low than specified value with the following checks.

S-Curve Check

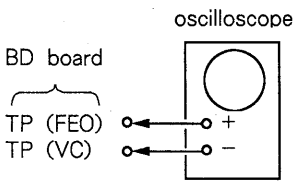

Procedure:

1. Connect oscilloscope to test point TP (FE) on BD board.
2. Connect between test point TP (FEI) and TP (VC) by lead wire.
3. Turned Power switch on and actuate the focus search. (actuate the focus search when disc table is moving in and out.)
4. Check the oscilloscope waveform (S-curve) is symmetrical between A and B. And confirm peak to peak level within 3 ± 1Vp-p.

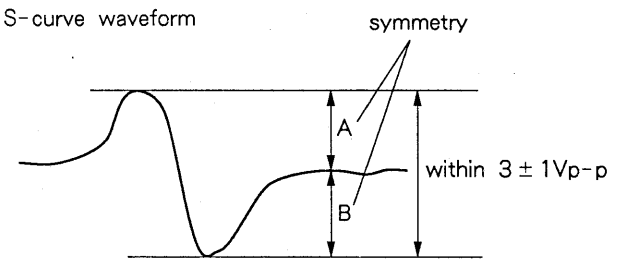

5. After check, remove the lead wire connected in step 2.

Note :
- Try to measure several times to make sure that the ratio of A : B or B : A is more than 10 : 7.
- Take sweep time as long as possible and light up the brightness to obtain best waveform.

RF Level Check

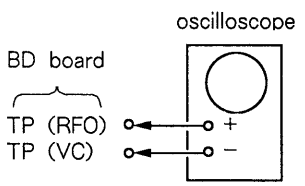

Procedure:

1. Connect oscilloscope to test point TP (RFO) on BD board.
2. Turn Power switch on.
3. Put disc (YEDS-18) in and playback.
4. Confirm that oscilloscope waveform is clear and check RF signal level is correct or not.

Note: Clear RF signal waveform means that the shape "◇" can be clearly distinguished at the center of the waveform.

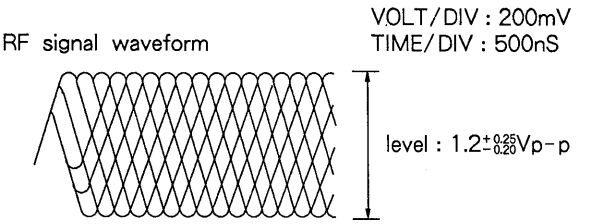

E-F Balance Check

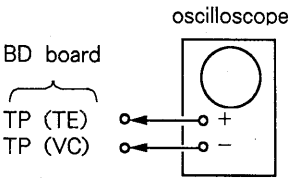

Procedure:

1. Connect test point TP (ADJ) to ground and TP (TEI) to TP (VC) with lead wire.
2. Connect oscilloscope to test point TP (TE) on BD board.
3. Turn Power switch on.
4. Put disc (YEDS-18) in and playback.
5. Confirm that the oscilloscope waveform is symmetrical on the top and bottom in relation to 0V, and check this level.

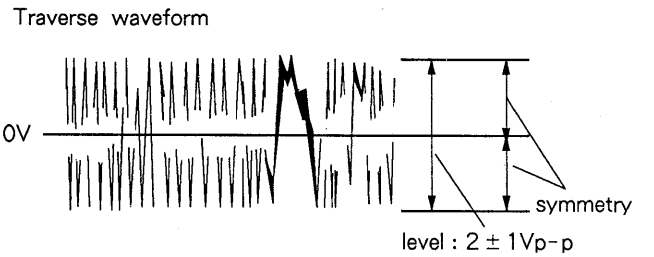

6. Remove the lead wire connected in step 1.

RF PLL Free-run Frequency Check

Procedure:

1. Connect frequency counter to test point (PCK) with lead wire.

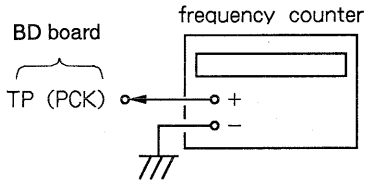

2. Turn Power switch on.
3. Confirm that reading on frequency counter is 4.3218MHz.

Adjustment Location:

[BD BOARD]

– Conductor side –

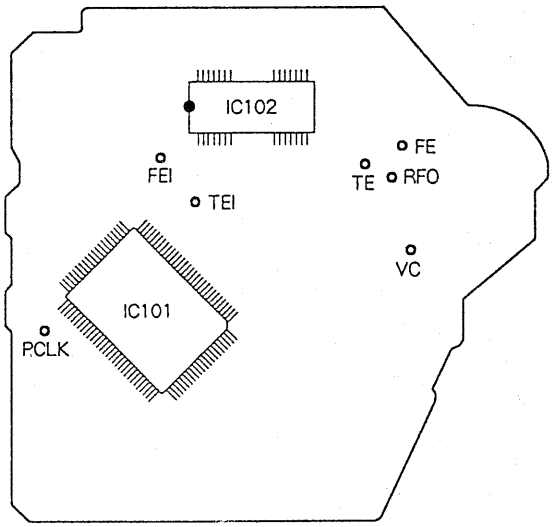

SECTION 4
DIAGRAMS

4-1. BLOCK DIAGRAM

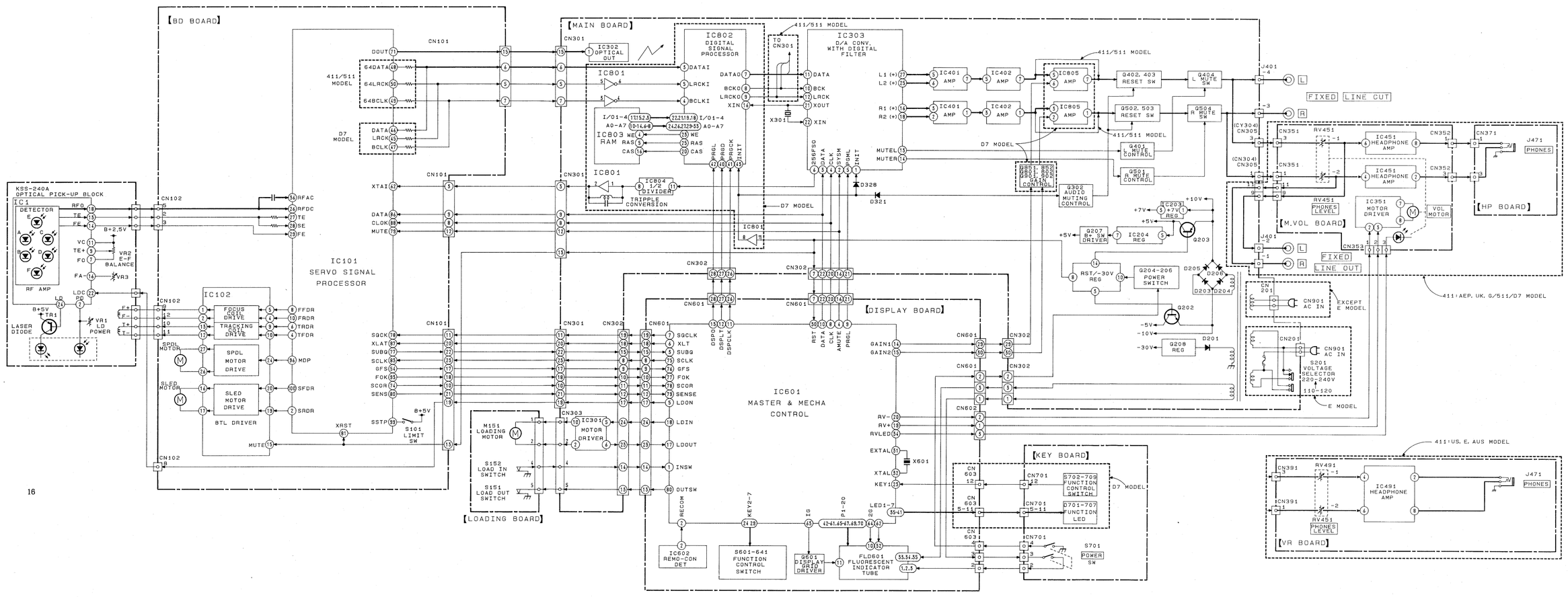

4-2. PRINTED WIRING BOARDS

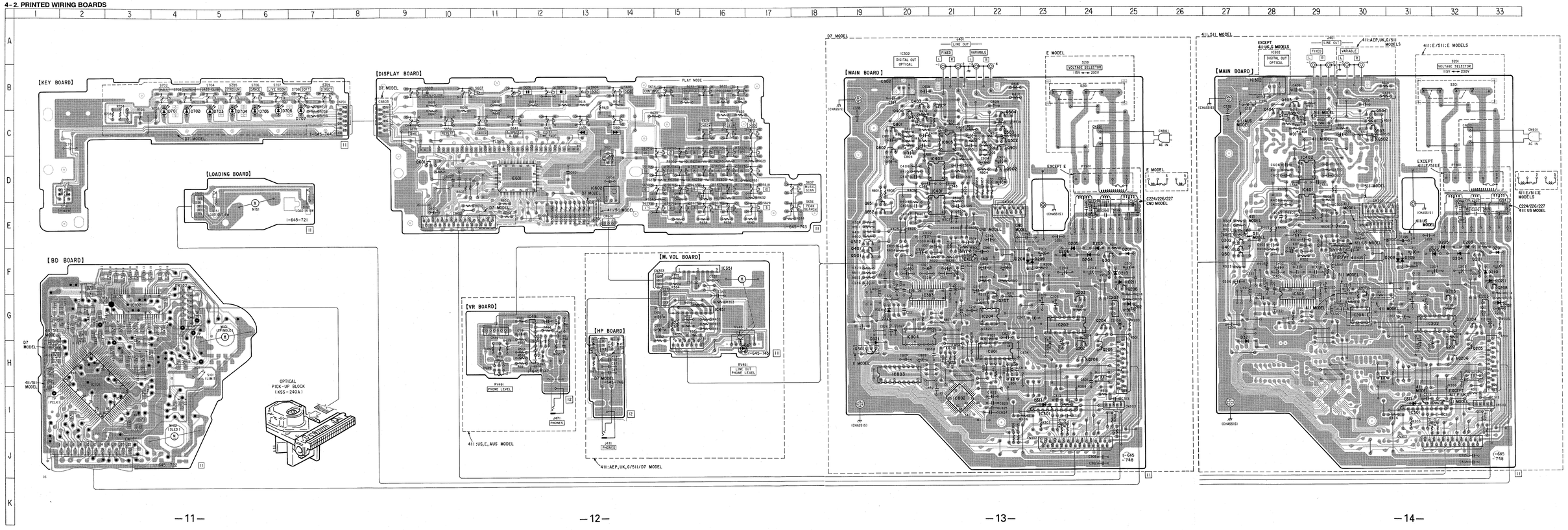

4-3. SCHEMATIC DIAGRAM (1/2) — TYPE CDP-D7 —

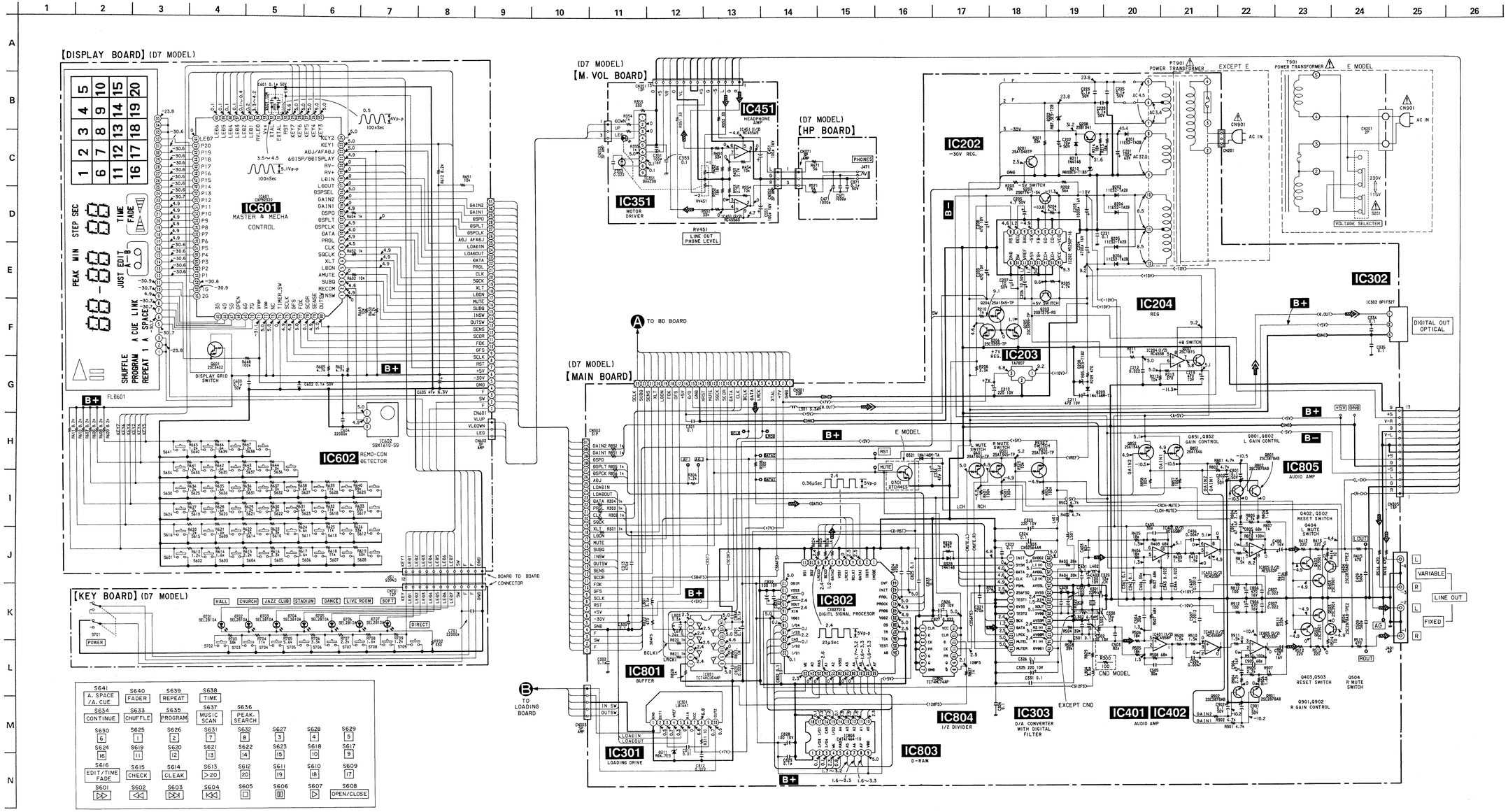

● Semiconductor Location

Ref. No.	Location	Ref. No.	Location	Ref. No.	Location
D201A	E-25	IC202A	G-23	Q205A	H-24
D201B	E-33	IC202B	G-31	Q205B	H-32
D202A	G-25	IC203A	F-24	Q206A	H-24
D202B	G-33	IC203B	F-32	Q206B	H-32
D203A	E-24	IC204A	G-22	Q207A	F-22
D203B	E-32	IC204B	G-30	Q207B	F-30
D204A	F-24	IC301A	I-23	Q208A	F-25
D204B	F-32	IC301B	I-31	Q208B	F-33
D205A	E-24	IC302A	B-19	Q301	G-19
D205B	E-32	IC302B	B-28	Q302A	E-19
D206A	E-23	IC303A	F-20	Q302B	E-27
D206B	E-31	IC303B	F-28	Q401A	E-19
D208A	F-22	IC351	F-16	Q401B	E-27
D208B	F-30	IC401A	D-21	Q402A	B-20
D209A	F-23	IC401B	D-29	Q402B	B-28
D209B	F-31	IC402A	C-21	Q403A	B-20
D210A	F-25	IC402B	C-29	Q403B	B-28
D210B	F-33	IC451	G-16	Q404A	B-20
D211A	F-25	IC491	G-12	Q404B	B-28
D211B	F-33	IC601	D-11	Q501A	E-19
D311A	I-23	IC602	D-13	Q501B	E-27
D311B	I-31	IC801	H-22	Q502A	C-22
D321A	G-19	IC802	I-21	Q502B	C-30
D321B	G-27	IC803	H-20	Q503A	C-22
D328	G-19	IC804	G-20	Q503B	C-30
D701	B-4	IC805	C-21	Q504A	B-22
D702	B-4			Q504B	B-30
D703	B-5	Q201A	F-24	Q601	C-9
D704	B-5	Q201B	F-32	Q801	C-20
D705	B-6	Q202A	G-24	Q802	C-19
D706	B-6	Q202B	H-32	Q851	D-19
D707	B-7	Q203A	F-24	Q852	D-19
		Q203B	F-32	Q901	C-22
IC101	H-2	Q204A	G-24	Q902	D-22
IC102	F-3	Q204B	G-32		

A : D7 MODEL
B : 411, 511 MODEL

Note on Mounting Diagram :

- ○—— : Parts extracted from the component side.
- ● ○ : Through hole.
- ▬ : Pattern on the side which is seen.
- ▬ : Pattern of the rear side.

Note on Schematic Diagram :

- All capacitors are in μF unless otherwise noted. pF: μμF 50WV or less are not indicated except for electrolytics and tantalums.
- All resistors are in Ω and ⅙ W or less unless otherwise specified.

Note :The components identified by mark ⚠ or dotted line with mark ⚠ are critical for safety.
Replace only with part number specified.

- B+ : B + Line
- B− : B − Line
- Voltages are taken with a VOM (input impedance 10 MΩ). Voltage variations may be noted due to normal production tolerances.
- Waveforms are taken with a oscilloscope. Voltage variations may be noted due to normal production tolerances.
- Signal path.
  ⇨ : CD

S641 A. SPACE /A. CUE	S640 FADER	S639 REPEAT	S638 TIME						
S634 CONTINUE	S633 CHUFFLE	S635 PROGRAM	S637 MUSIC SCAN	S636 PEAK-SEARCH					
S630 6	S625 1	S626 2	S631 7	S632 8	S627 3	S628 4	S629 5		
S624 16	S619 11	S620 12	S621 13	S622 14	S623 15	S618 10	S617 9		
S616 EDIT/TIME FADE	S615 CHECK	S614 CLEAK	S613 >20	S612 20	S611 19	S610 18	S609 17		
S601 ▷▷	S602 ◁◁	S603 ▷▷	S604 ◁◁	S605 □	S606 ▥	S607 ▷	S608 OPEN/CLOSE		

16

4-4. SCHEMATIC DIAGRAM (1/2) — TYPE CDP-411/511 —

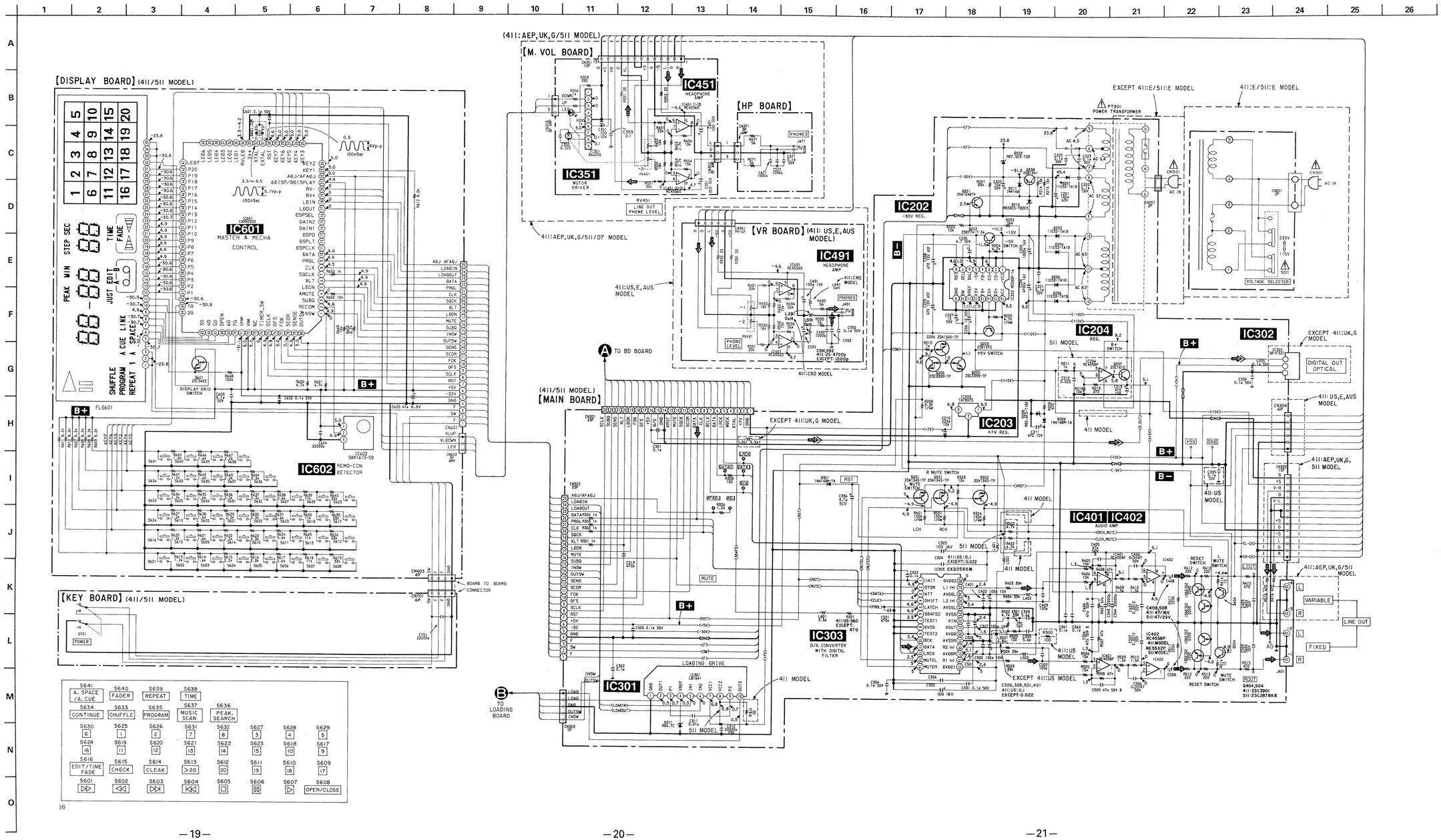

4-5. SEMICONDUCTOR LEAD LAYOUTS

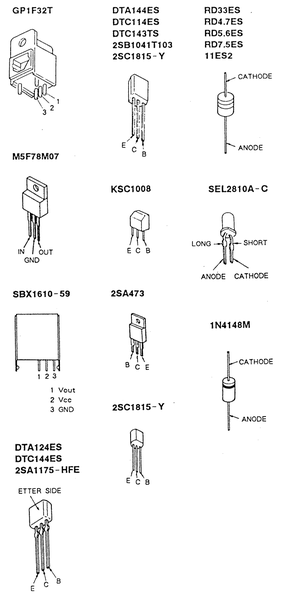

Note on Schematic Diagram:

- All capacitors are in μF unless otherwise noted. pF: μμF 50WV or less are not indicated except for electrolytics and tantalums.
- All resistors are in Ω and], W or less unless otherwise specified.

Note : The components identified by mark ⚠ or dotted line with mark ⚠ are critical for safety.
Replace only with part number specified.

- B+ : B+ Line
- B− : B − Line
- Voltages are taken with a VOM (input impedance 10 MΩ). Voltage variations may be noted due to normal production tolerances.
- Waveforms are taken with a oscilloscope. Voltage variations may be noted due to normal production tolerances.
- Signal path. ⇨ : CD
- AUS : Australian model
  G : Germany model
  CND : Canadian model

F : AEP, UK, G : MADE IN FRANCE model
OTHER : MADE IN JAPAN model

4-6. SCHEMATIC DIAGRAM (2/2)

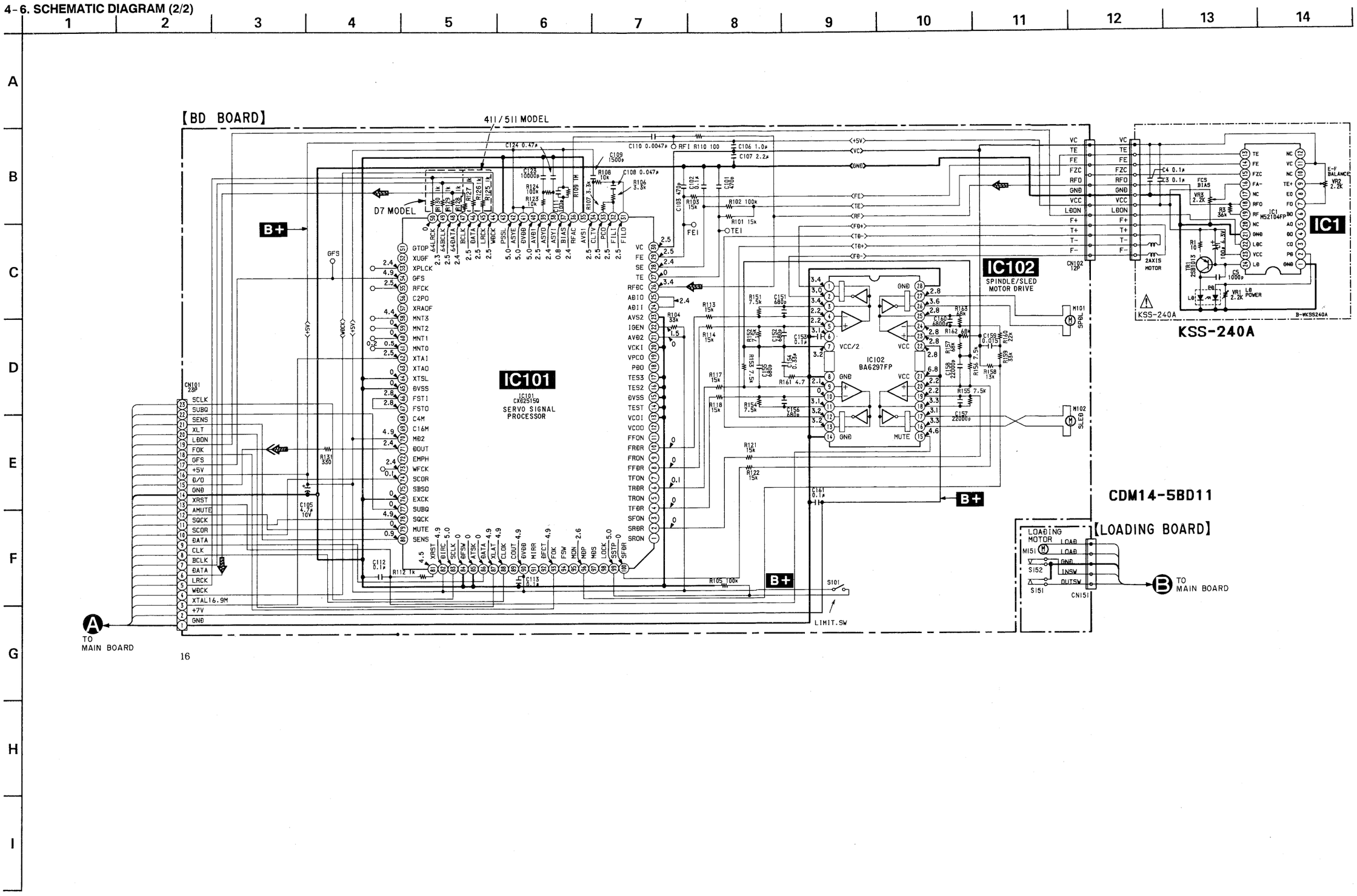

4-7. IC BLOCK DIAGRAM

• IC101 CXD2515Q

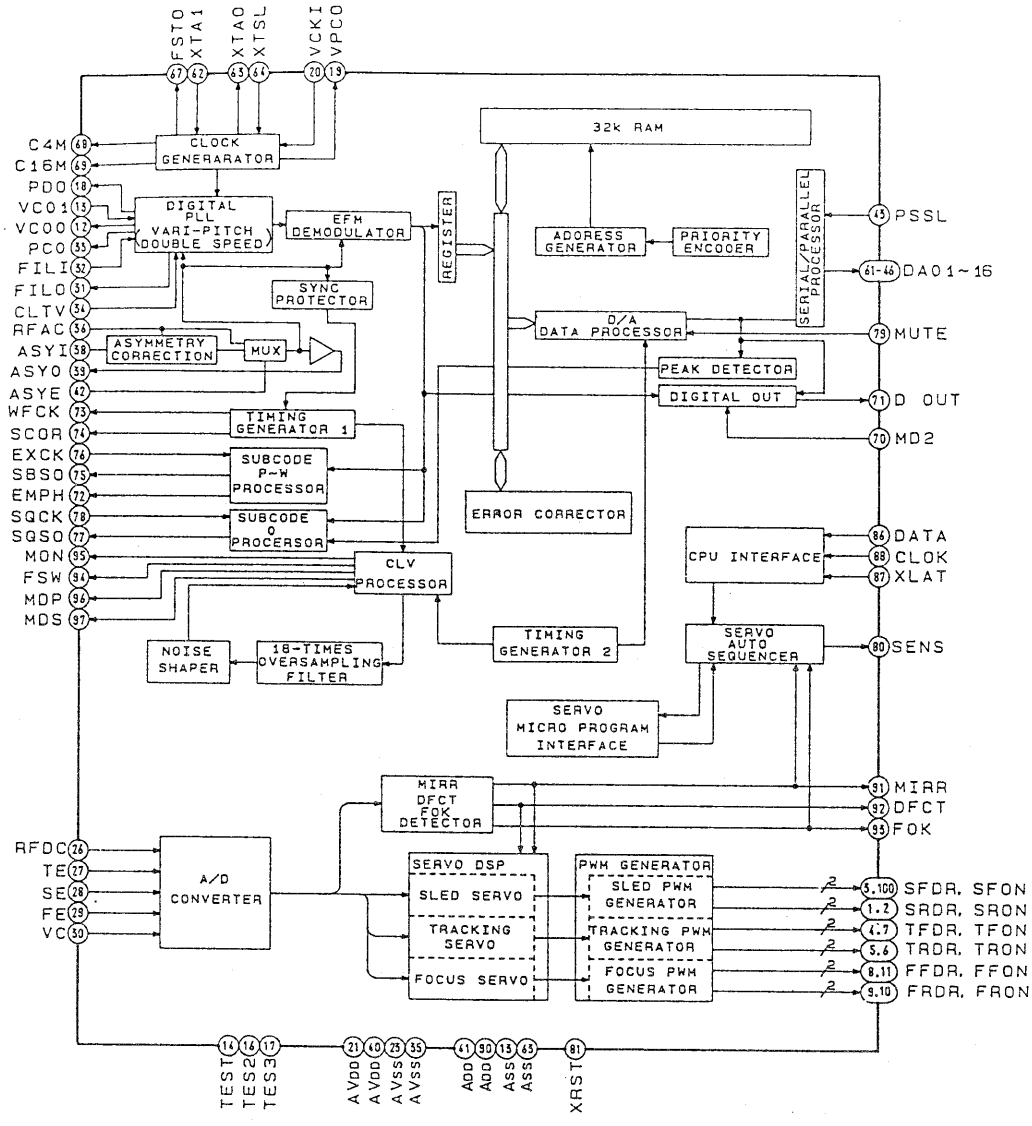

• IC303 CXD2564AM

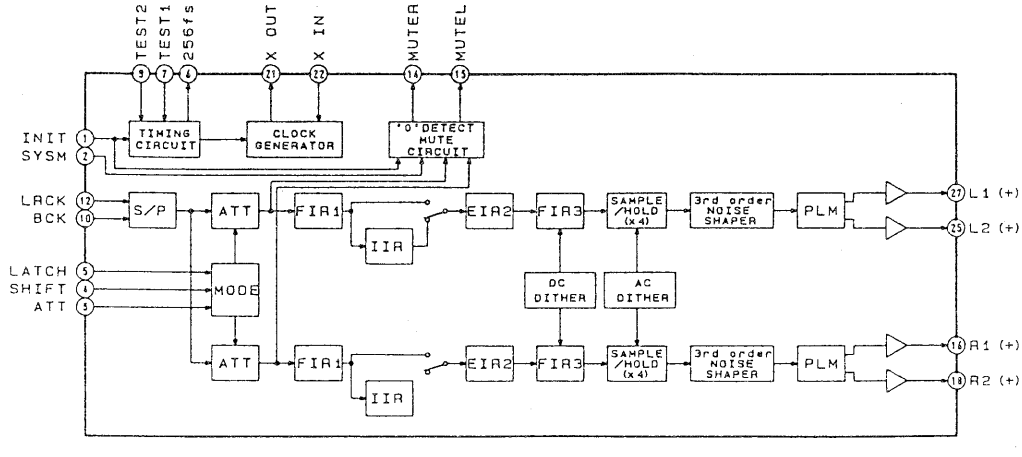

4-8. CIRCUIT BOARDS LOCATION

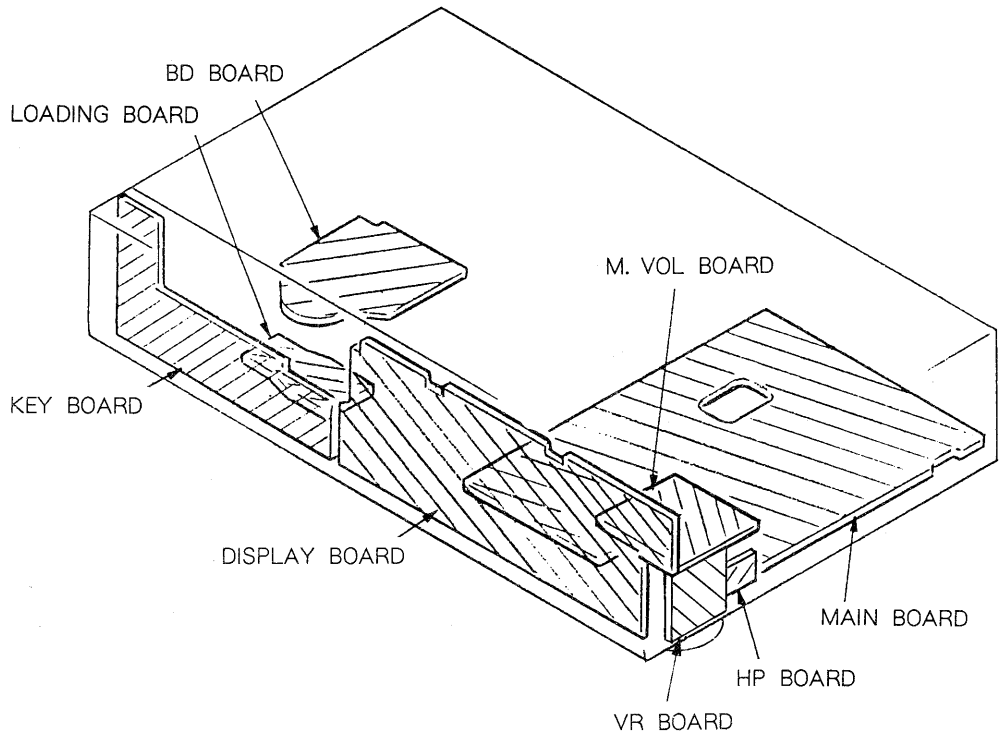

4-9. IC DESCRIPTION

• IC101 CXD2515Q

No.	Pin Name	I/O	Description
1	SRON	O	Sled drive output
2	SRDR	O	Sled drive output
3	SFON	O	Sled drive output
4	TFDR	O	Tracking drive output
5	TRON	O	Tracking drive output
6	TRDR	O	Tracking drive output
7	TFON	O	Tracking drive output
8	FFDR	O	Focus drive output
9	FRON	O	Focus drive output
10	FRDR	O	Focus drive output
11	FFON	O	Focus drive output
12	VCOO	O	VCO output for analog EFM PLL
13	VCOI	I	VCO output for analog EFM PLL
14	TEST	I	TEST pin connected normally to GND
15	DVss	—	Digital GND
16	TES2	I	TEST pin connected normally to GND
17	TES3	I	TEST pin connected normally to GND
18	PDO	O	Charge-pump output for analog EFM PLL
19	VPCO	O	Charge-pump output for variable pitch PLL
20	VCKI	I	Clock input from variable pitch external VCO
21	AVD2	—	Analog power supply
22	IGEN	I	Power supply pin for operational amplifiers
23	AVS2	—	Analog GND
24	ADII	I	Input pin for A/D converter
25	ADIO	O	Operational amplifier output pin
26	RFDC	I	RF signal input
27	TE	I	Tracking error signal input
28	SE	I	Sled error signal input
29	FE	I	Focus error signal input
30	VC	I	Center voltage input pin
31	FILO	O	Filter output for master PLL
32	FILI	I	Filter input for master PLL
33	PCO	O	Charge-pump output for master PLL
34	CLTV	I	Control voltage input for master VCO
35	AVS1	—	Analog GND
36	RFAC	I	EFM signal input
37	BIAS	I	Asymmetry circuit constant current input
38	ASYI	I	Asymmetry comparate voltage input
39	ASYO	O	EFM full swing output
40	AVD1	—	Analog power supply
41	DVDD	—	Digital power supply
42	ASYE	I	Asymmetry circuit ON/OFF
43	PSSL	I	Audio data output mode selection input
44	WDCK	O	48-bit slot D/A interface. Word clock

No.	Pin Name	I/O	Description
45	LRCK	O	48-bit slot D/A interface. LR clock
46	DATA	O	DA 16 output when PSSL = 1. 48-bit slot serial data when PSSL = 0
47	BCLK	O	DA 15 output when PSSL = 1. 48-bit slot data when PSSL = 0
48	64DATA	O	DA 14 output when PSSL = 1. 64-bit slot data when PSSL = 0
49	64BCLK	O	DA 13 output when PSSL = 1. 64-bit slot data when PSSL = 0
50	64LRCK	O	DA 12 output when PSSL = 1. 64-bit slot data when PSSL = 0
51	GTOP	O	DA 11 output when PSSL = 1. GTOP output when PSSL = 0
52	XUGF	O	DA 10 output when PSSL = 1. XUGF output when PSSL = 0
53	XPLCK	O	DA 09 output when PSSL = 1. XPLCK output when PSSL = 0
54	GFS	O	DA 08 output when PSSL = 1. GFS output when PSSL = 0
55	PFCK	O	DA 07 output when PSSL = 1. RFCK output when PSSL = 0
56	C2PO	O	DA 06 output when PSSL = 1. C2PO output when PSSL = 0
57	XRAOF	O	DA 05 output when PSSL = 1. XRA0F output when PSSL = 0
58	MNT3	O	DA 04 output when PSSL = 1. MNT3 output when PSSL = 0
59	MNT2	O	DA 03 output when PSSL = 1. MNT2 output when PSSL = 0
60	MNT1	O	DA 02 output when PSSL = 1. MNT1 output when PSSL = 0
61	MNT0	O	DA 01 output when PSSL = 1. MNT0 output when PSSL = 0
62	XTAI	I	X'tal oscillator circuit input
63	XTAO	O	X'tal oscillator circuit output
64	XTSL	I	X'tal selection input pin
65	DVss	—	Digital GND
66	FSTI	I	2/3 divider output of pins 62,63
67	FSTO	O	2/3 divider output of pins 62,63
68	C4M	O	4.2336MHz output
69	C16M	O	16.9344MHz output
70	MD2	I	Digital-out ON/OFF control pin
71	DOUT	O	Digital-out output pin
72	EMPH	O	Playback disc output in emphasis mode
73	WFCK	O	WFCK output
74	SCOR	O	Sub-code sync output
75	SBSO	O	Sub-P through Sub-W serial output
76	EXCK	I	Clock input for SBS0 read-out
77	SUBQ	O	Sub-Q 80-bit output
78	SQCK	I	Clock input for SQS0 read-out
79	MUTE	I	Muting selection pin
80	SENS	O	SENS output
81	XRST	I	System reset
82	DIRC	I	Used in 1-track jump mode
83	SCLK	I	SENS serial data read-out clock
84	DFSW	I	DFCT selection pin
85	ATSK	I	Input pin for anti-shock
86	DATA	I	Serial data input, supplied from CPU
87	XLAT	I	Latch input, supplied from CPU
88	CLOK	I	Serial data transfer clock input, supplied from CPU

No.	Pin Name	I/O	Description
89	COUT	O	Numbers of track counted signal output
90	DV_{DD}	—	Digital power supply
91	MIRR	O	Mirror signal output
92	DFCT	O	Defect signal output
93	FOK	O	Focus OK output
94	FSW	O	Output to select spindle motor output filter
95	MON	O	Output to control ON/OFF of spindle motor
96	MDP	O	Output to control spindle motor servo
97	MDS	O	Output to control spindle motor servo
98	LOCK	O	GFS is sampled by 460Hz. H when GFS is H.
99	SSTP	I	Input signal to detect disc inner most track
100	SFDR	O	Sled drive output

• IC303 CXD2564AM (D7) / CXD2565M (411/511)

No.	Pin Name	I/O	Description
1	INIT	I	Re-synchronizing at rise-up edge of this signal
2	SYSM	I	System muting input
3	DATA	I	Attenuation data input
4	CLK	I	Shift clock input
5	PGML	I	Latch clock input
6	256fsO (D7) 384fsO (411/511)	O	256fs clock output (D7). 384fs clock output (411/511).
7	TEST1	I	Test pin. Fixed to "L" level during normal operation.
8	DV_{SS}	—	Digital GND
9	TEST2	I	Test pin. Fixed to "L" level during normal operation.
10	BCK	I	BCK input
11	DATA	I	Data input
12	LRCK	I	LRCK input
13	MUTEL	O	L-ch muting flag output
14	MUTER	O	R-ch muting flag output
15	$DV_{DD}1$	—	Digital power supply
16	R1 (+)	O	R-ch PLM output-1 (positive phase)
17	$AV_{DD}R$	—	L-ch analog power supply
18	R2 (+)	O	R-ch PLM output-2 (positive phase)
19	$AV_{SS}R$	—	L-ch analog GND
20	XV_{DD}	—	Master clock power supply
21	XOUT	O	X'tal oscillator output (512fs) (D7) / (768fs) (411/511).
22	XIN	I	X'tal oscillator input (512fs) (D7) / (768fs) (411/511).
23	XV_{SS}	—	Master clock GND
24	$AV_{SS}L$	—	L-ch analog GND
25	L2 (+)	O	L-ch PLM output-2 (positive phase)
26	$AV_{DD}L$	—	L-ch analog power supply
27	L1 (+)	O	L-ch PLM output-1 (positive phase)
28	$DV_{DD}2$	—	Digital power supply

• IC601 CXP82320-015Q (D7) / CXP82316-016Q (411/511)

No.	Pin Name	I/O	Description
1	$\overline{\text{INSW}}$	I	Loading in switch
2	RECOM	I	Remote commander input
3	SUBQ	I	SUB-Q serial data
4	AMUTE	O	Audio mute out (mute on "H")
5	LDON	O	Laser ON/OFF (Laser on "H")
6	XLT	O	CXD2515 data latch pulse
7	SQCLK	O	SUB-Q read clock
8	CLK	O	CXD2515, CXD2565 (D7) 2564 (411/511) data clock
9	PRGL	O	CXD2565 (D7) 2564 (411/511) data latch pulse
10	DATA	O	CXD2515, CXD2565 (D7) 2564 (411/511) data
11	DSPCLK	O	CXD2701 data clock
12	DSPLT	O	CXD2701 data latch pulse
13	DSPO	O	CXD2701 data
14	GAIN1	O	Gain adjustment for DSP
15	GAIN2	O	Gain adjustment for DSP
16	DSPSEL	I	+5V
17	LDOUT	O	Loading out output
18	LDIN	O	Loading in output
19	RV −	O	Remote commander Volume −
20	RV +	O	Remote commander Volume +
21	6/8 DISP	I	6DISP "H", 8DISP "L"
22	ADJ/AFADJ	I	AFADJ, ADJ mode test
23	KEY1	I	Key AID input 1
24	KEY2	I	Key AID input 2
25	KEY3	I	Key AID input 3
26	KEY4	I	Key AID input 4
27	KEY5	I	Key AID input 5
28	KEY6	I	Key AID input 6
29	KEY7	I	Key AID input 7
30	$\overline{\text{RST}}$	I	RESET input
31	EXTAL	I	Main system clock connection
32	XTAL	—	Main system clock connection
33	Vss	I	0V
34	RVLED	O	Remote commander Volume LED
35	LED1	—	LED1 Driver
36	LED2	—	LED2 Driver
37	LED3	—	LED3 Driver
38	LED4	—	LED4 Driver
39	LED5	—	LED5 Driver
40	LED6	—	LED6 Driver

No.	Pin Name	I/O	Description
41	LED7	—	LED7 Driver
42	P20	O	Display segment 20
43	P19	O	Display segment 19
44	P18	O	Display segment 18
45	P17	O	Display segment 17
46	P16	O	Display segment 16
47	P15	O	Display segment 15
48	P14	O	Display segment 14
49	P13	O	Display segment 13
50	P12	O	Display segment 12
51	P11	O	Display segment 11
52	P10	O	Display segment 10
53	P9	O	Display segment 9
54	P8	O	Display segment 8
55	P7	O	Display segment 7
56	P6	O	Display segment 6
57	P5	O	Display segment 5
58	P4	O	Display segment 4
59	P3	O	Display segment 3
60	P2	O	Display segment 2
61	P1	O	Display segment 1
62	P21	O	Display segment 21
63	1G	O	Display grid 1
64	2G	O	Display grid 2
65	3G	O	Display grid 3
66	4G	O	Display grid 4
67	5G	O	Display grid 5
68	NC	O	OPEN
69	6G	O	Display grid 7
70	7G	O	Display grid 8
71	V_{FDP}	I	−30V, Display grid, segment low voltage
72	V_{DD}	I	5V
73	NC	I	5V
74	TIMERSW	I	Timer start switch
75	SCLK	O	SSP data read clock
76	GFS	I	GFS input
77	FOK	I	FOK input
78	SCOR	I	SUB-Q sync input
79	SENSE	I	SSP, DSP sense input
80	$\overline{\text{OUTSW}}$	I	Loading out switch

SECTION 5
EXPLODED VIEWS

NOTE:

- −XX, −X mean standardized parts, so they may have some differences from the original one.
- Color Indication of Appearance Parts Example :
  KNOB, BALANCE (WHITE)...(RED)
  ↑ Parts color ↑ Cabinet's color
- Items marked "*" are not stocked since they are seldom required for routine service. Some delay should be anticipated when ordering these items.
- The mechanical parts with no reference number in the exploded views are not supplied.
- Hardware (# mark) list is given in the last of this parts list.
- AUS : Australian model
  G : Germany model
  CND : Canadian model

The components identified by mark ⚠ or dotted line with mark ⚠ are critical for safety.
Replace only with part number specified.

Les composants identifiés par une marque ⚠ sont critiques pour la sécurité.
Ne les remplacer que par une pièce portant le numéro spéci-fie.

5-1. CABINET SECTION

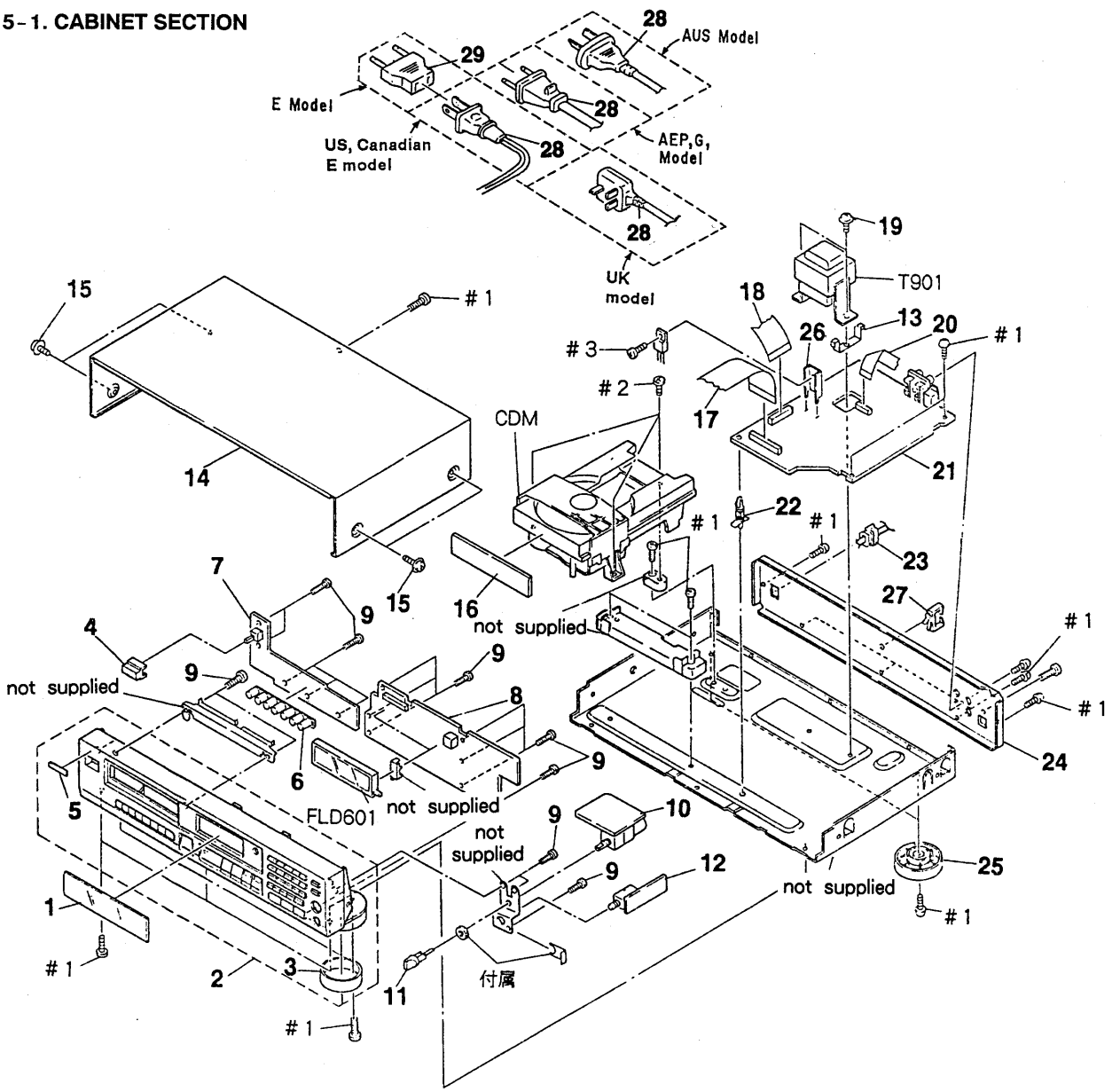

Ref. No.	Part No.	Description	Remarks
1	4-955-855-01	PLATE, INDICATION	
2	X-4943-330-1	PANEL ASSY, FRONT (411:AEP)	
2	X-4943-331-1	PANEL ASSY, FRONT (411:US)	
2	X-4943-334-1	PANEL ASSY, FRONT (511:AEP, E, AUS)	
2	X-4943-335-1	PANEL ASSY, FRONT (D7:AEP, E, AUS)	
2	X-4943-336-1	PANEL ASSY, FRONT (D7:CND)	
2	X-4943-611-1	PANEL ASSY, FRONT (411:E, AUS)	
3	4-933-135-01	RING (DIA. 58A), ORNAMENTAL (511:F:AEP, G/D7:F:AEP, G)	
4	4-947-034-01	BUTTON (POWER)	
5	4-925-334-11	EMBLEM (5-A), SONY (411:US, F:AEP, UK, G/511:F:AEP, G/D7)	
* 6	4-955-854-01	HOLDER (LED) (D7)	
* 7	1-645-744-12	KEY BOARD	
* 8	A-4649-554-A	DISPLAY BOARD, COMPLETE (D7)	
* 8	A-4649-563-A	DISPLAY BOARD, COMPLETE (411/511)	
9	4-951-620-01	SCREW (2.6X8), +BVTP	
* 10	1-645-745-12	M. VOL BOARD (411:AEP, UK, G/511/D7)	
11	A-4660-389-A	KNOB (HP) ASSY	
* 12	1-645-746-12	HP BOARD (411:AEP, UK, G/511/D7)	
13	4-952-197-01	PLATE (TR), GROUND (411:US, AEP, E, AUS /511:AEP, E, AUS/D7:CND, AEP, E, AUS)	
* 14	4-937-817-01	CASE	
15	3-704-366-01	SCREW (CASE) (M3X8) (411:US, AEP, E, AUS /511:AEP, E, AUS/D7:CND, AEP, E, AUS)	
16	4-955-856-01	PANEL, LOADING (411:UK, G)	
16	4-955-856-31	PANEL, LOADING (411:US, AEP, E, AUS/D7:CND, AEP, E, AUS)	
16	4-955-928-21	PANEL, LOADING (511:AEP, E, AUS)	
17	1-696-734-11	WIRE (FLAT TYPE) (25 CORE) (411/511)	
17	1-696-735-11	WIRE (FLAT TYPE) (31 CORE) (D7)	
18	1-696-733-11	WIRE (FLAT TYPE) (23 CORE)	
19	4-886-821-11	SCREW, S TIGHT, +PTTWH 3X6	
20	1-751-395-11	WIRE (FLAT TYPE) (13 CORE) (411:AEP, UK, G/511/D7)	
* 21	A-4649-553-A	MAIN BOARD, COMPLETE (D7:AEP, AUS)	
* 21	A-4649-556-A	MAIN BOARD, COMPLETE (D7:E)	
* 21	A-4649-561-A	MAIN BOARD, COMPLETE (411:US)	
* 21	A-4649-565-A	MAIN BOARD, COMPLETE (411:AEP)	
* 21	A-4649-566-A	MAIN BOARD, COMPLETE (411:E)	
* 21	A-4649-567-A	MAIN BOARD, COMPLETE (511:AEP, AUS)	
* 21	A-4649-568-A	MAIN BOARD, COMPLETE (511:E)	
* 21	A-4649-577-A	MAIN BOARD, COMPLETE (D7:CND)	
* 21	A-4649-608-A	MAIN BOARD, COMPLETE (411:AUS)	
* 22	4-924-098-01	HOLDER, PC BOARD	

Ref. No.	Part No.	Description	Remarks
* 23	3-703-244-00	BUSHING(2104), CORD (411:US, AEP, AUS, UK, G /511:AEP, G/D7:AEP, AUS, G)	
* 23	3-703-571-11	BUSHING (S) (4516), CORD (411:E/511:E, AUS/D7:E)	
* 24	4-956-652-22	PANEL, BACK (411:AEP)	(MADE IN JAPAN)
* 24	4-955-858-04	PANEL(AL), BACK(411:AEP)	(MADE IN FRANCE)
* 24	4-955-858-13	PANEL(AL), BACK(411:UK)	
* 24	4-955-858-82	PANEL(AL), BACK(411:G)	
* 24	4-956-652-01	PANEL, BACK (411:US)	
* 24	4-956-652-31	PANEL, BACK (411:E)	
* 24	4-956-652-41	PANEL, BACK (411:AUS)	
* 24	4-956-654-12	PANEL, BACK (511:AEP)	(MADE IN JAPAN)
* 24	4-955-858-21	PANEL(AL), BACK(511:AEP, G)	(MADE IN FRANCE)
* 24	4-956-654-21	PANEL, BACK (511:E)	
* 24	4-956-654-31	PANEL, BACK (511:AUS)	
* 24	4-956-653-32	PANEL, BACK (D7:AEP)	(MADE IN JAPAN)
* 24	4-955-858-61	PANEL, BACK(D7:AEP, G)	(MADE IN FRANCE)
* 24	4-956-653-21	PANEL, BACK (D7:CND)	
* 24	4-956-653-41	PANEL, BACK (D7:E)	
* 24	4-956-653-51	PANEL, BACK (D7:AUS)	
25	4-956-885-01	FOOT (F58175S2W) (411:US/D7:CND)	
25	4-956-885-11	FOOT (F58175S2W) (411:AEP, E, AUS, UK, G /511/D7:AEP, E, AUS, G)	
* 26	3-309-144-31	HEAT SINK (411)	
* 26	4-941-237-01	HEAT SINK (511/D7)	
* 27	4-949-235-01	HOOK (411:US, AEP, E, AUS/511:AEP, E, AUS /D7:CND, AEP, E, AUS)	(MADE IN JAPAN)
⚠28	1-575-651-21	CORD, POWER(411:AEP, G/511:AEP, G/D7:AEP, G)	
⚠28	1-590-836-11	CORD, POWER(411:US/D7:CND)	
⚠28	1-696-027-11	CORD, POWER(411:E/511:E/D7:E)	
⚠28	1-696-845-11	CORD, POWER(411:AUS/511:AUS/D7:AUS)	
⚠28	1-696-907-11	CORD, POWER(411:UK)	
29	1-569-008-11	ADAPTER, CONVERSION 2P (411:E/511:E/D7:E)	
FLD601	1-519-753-11	INDICATOR TUBE, FLUORESCENT	
⚠T901	1-423-516-11	TRANSFORMER, POWER(411:US/D7:CND)	
⚠T901	1-423-518-11	TRANSFORMER, POWER(411:E/511:E/D7:E)	
⚠T901	1-449-922-11	TRANSFORMER, POWER(411:AEP, AUS /511:AEP, AUS/D7:AEP, AUS)	(MADE IN JAPAN)
⚠T901	1-449-925-11	TRANSFORMER, POWER(411:F:AEP, UK, G /511:AEP, G/D7:AEP, G)	(MADE IN FRANCE)

Note:	Note:
The components identified by mark ⚠ or dotted line with mark ⚠ are critical for safety. Replace only with part number specified.	Les composants identifiés par une marque ⚠ sont critiques pour la sécurité. Ne les remplacer que par une pièce portant le numéro spécifié.

5-2. CD MECHANISM SECTION (CDM14-5BD10/5BD11)

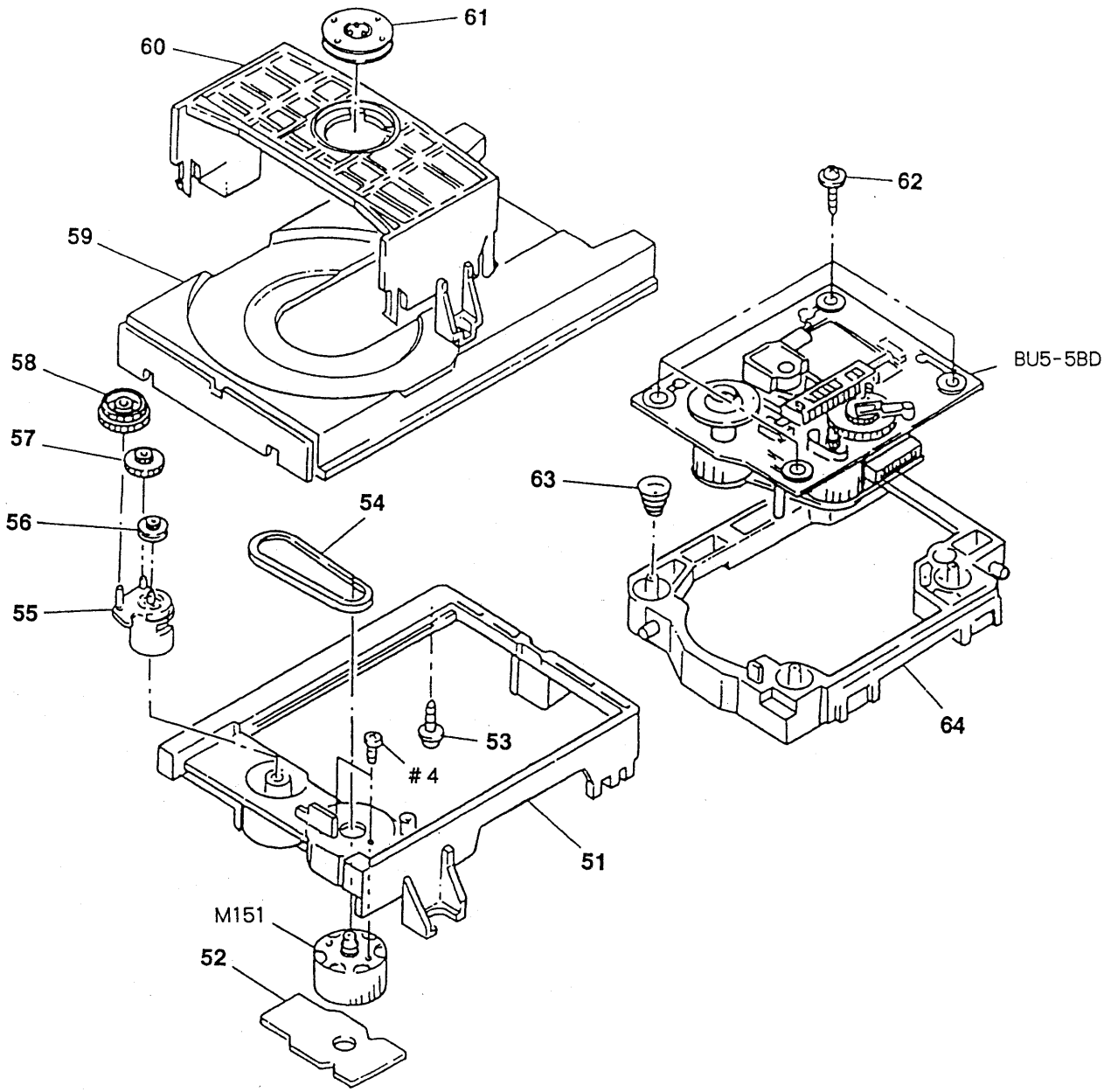

Ref. No.	Part No.	Description	Remarks
51	4-933-111-01	CHASSIS (MD) (MADE IN JAPAN)	
51	4-933-111-11	CHASSIS (MD) (MADE IN FRANCE)	
* 52	1-645-721-11	LOADING BOARD	
* 53	4-917-583-21	BRACKET, YOKE	
54	4-927-649-01	BELT	
55	4-933-109-01	CAM	
56	4-927-651-01	PULLEY (S)	
57	4-927-628-01	GEAR (C)	
58	4-933-107-01	GEAR (PL)	
59	4-933-112-01	TABLE, DISK (MADE IN JAPAN)	
59	4-933-112-11	TABLE, DISK (MADE IN FRANCE)	
60	4-933-110-01	HOLDER (MG) (MADE IN JAPAN)	
60	4-933-110-11	HOLDER (MG) (MADE IN FRANCE)	
* 61	1-452-538-11	MAGNET	
62	4-933-134-01	SCREW (+PTPWH M2.6X6)	
63	4-948-503-01	SPRING (BU), COMPRESSION	
64	4-933-129-01	HOLDER (BU) (MADE IN JAPAN)	
64	4-933-129-12	HOLDER (BU) (MADE IN FRANCE)	
M151	A-4604-363-A	MOTOR (L) ASSY	

5-3. CD MECHANISM SECTION (CDM25-5BD10)

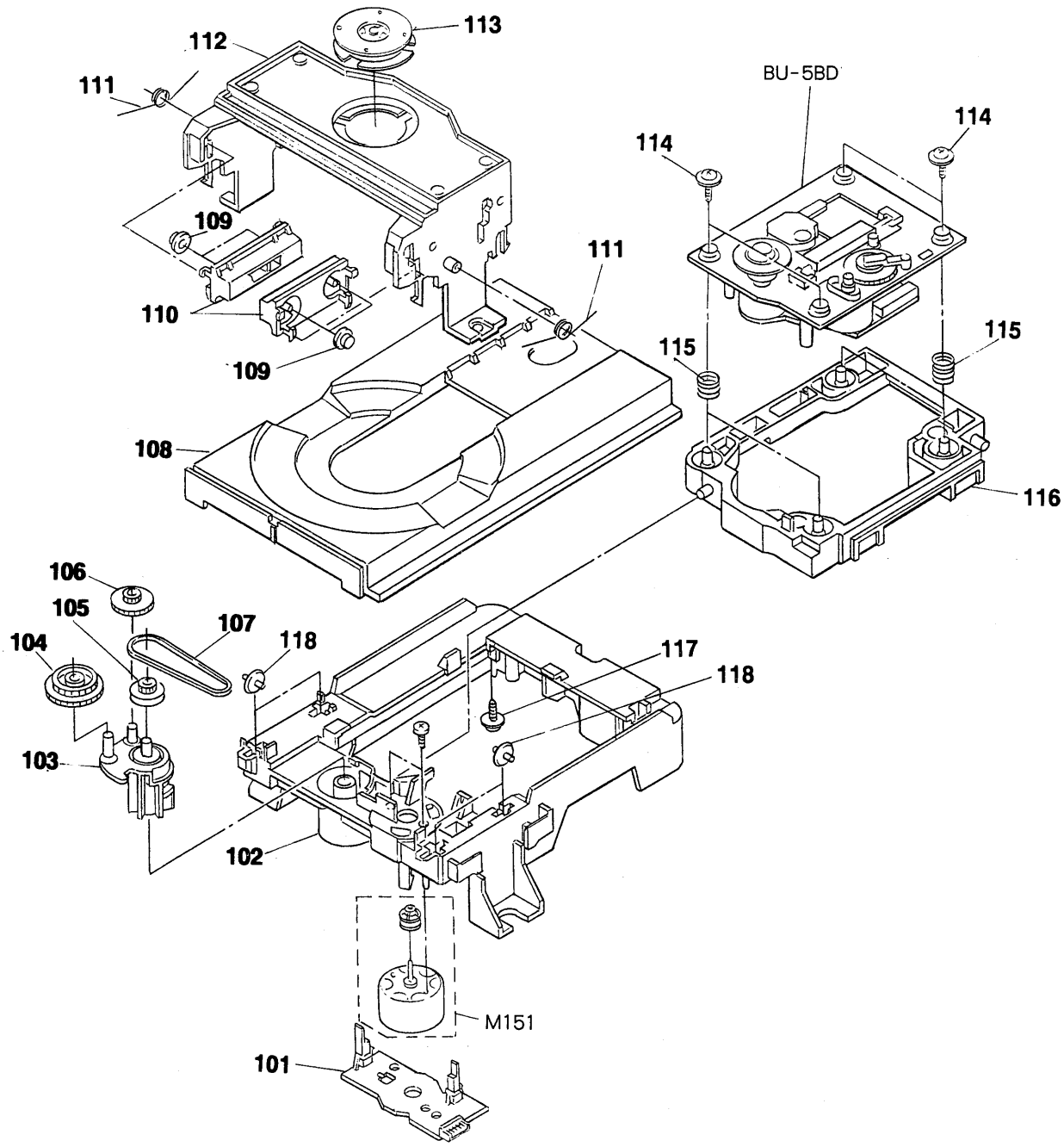

Ref. No.	Part No.	Description	Remarks
* 101	1-646-970-11	LOADING BOARD	
* 102	4-954-190-01	BASE (MD)	
103	4-933-109-01	CAM	
104	4-933-107-01	GEAR (PL)	
105	4-927-651-01	PULLEY (S)	
106	4-927-628-01	GEAR (C)	
107	4-927-649-01	BELT	
108	4-954-191-11	TABLE, DISK	
109	4-954-194-01	ROLLER (B)	
110	4-954-199-01	PLATE, SLIDE	
111	4-954-195-02	SPRING, TORSION	
* 112	4-954-192-01	HOLDER (M)	
* 113	1-452-538-11	MAGNET	
114	4-933-134-01	SCREW (+PTPWH M2.6X6)	
115	4-948-503-01	SPRING (BU), COMPRESSION	
116	4-933-129-01	HOLDER (BU)	
* 117	4-917-583-21	BRACKET, YOKE	
118	4-954-193-01	ROLLER (A)	
M151	A-4604-363-A	MOTOR (L) ASSY	

5-4. PIC-UP BLOCK (BU-5BD10/5BD11/5BD10B)

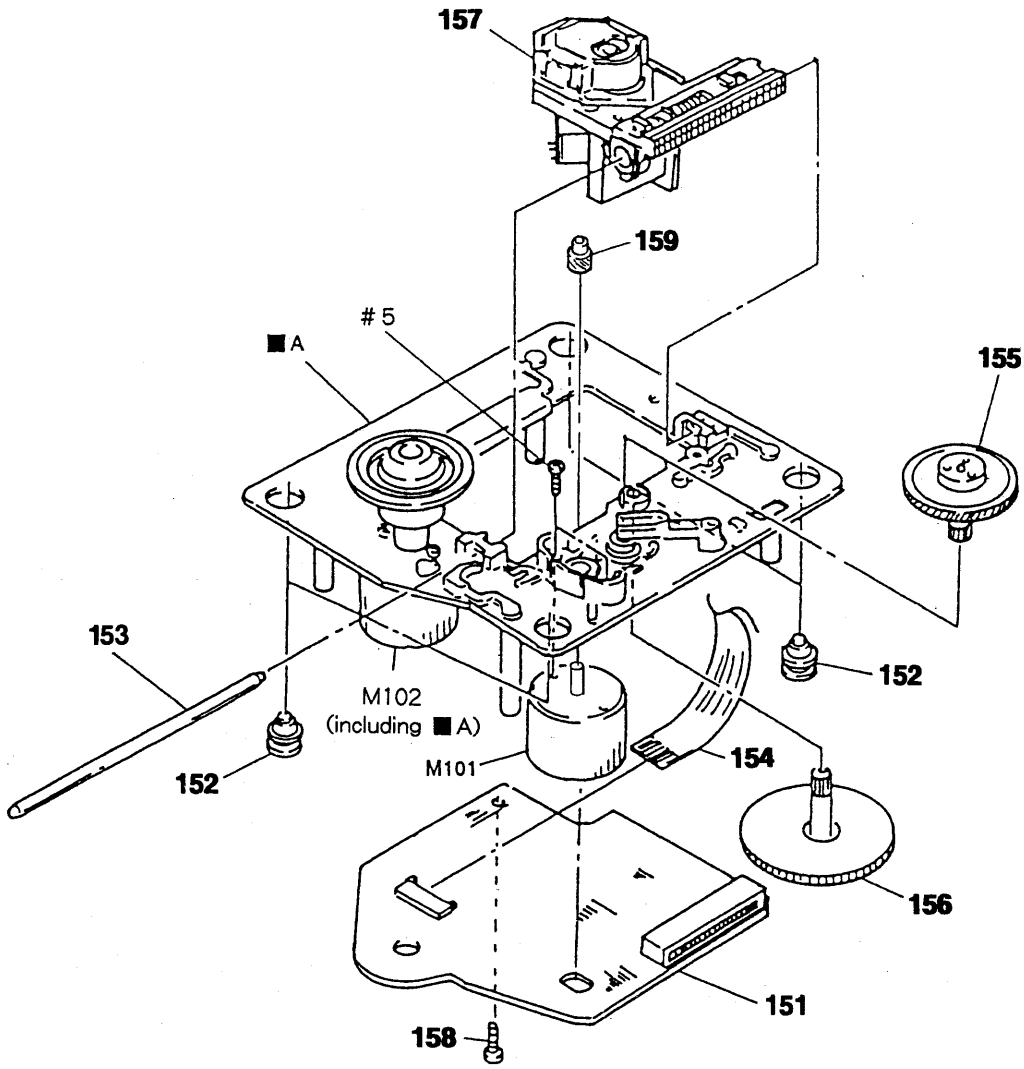

Ref. No.	Part No.	Description	Remarks
* 151	A-4649-432-A	BD BOARD, COMPLETE (411/511)	
* 151	A-4649-433-A	BD BOARD, COMPLETE (D7)	
152	4-933-126-01	INSULATOR (A)(411/D7)	
152	4-951-940-01	INSULATOR (BU) (511)	
153	4-917-565-01	SHAFT, SLED	
154	1-575-001-11	WIRE, FLAT TYPE (12 CORE)	
155	4-917-567-01	GEAR (M)	
156	4-917-564-01	GEAR (P), FLATNESS	
⚠157	8-848-144-11	DEVICE, OPTICAL KSS-240A	
158	4-951-620-01	SCREW (2.6X8), +BVTP	
159	4-917-566-01	GEAR (S)	
M101	X-4917-504-1	MOTOR ASSY (SLED)	
M102	X-4917-523-3	MOTOR ASSY (SPINDLE)	

Note:
The components identified by mark ⚠ or dotted line with mark ⚠ are critical for safety.
Replace only with part number specified.

Note:
Les composants identifiés par une marque ⚠ sont critiques pour la sécurité.
Ne les remplacer que par une pièce portant le numéro spécifié.

SECTION 6
ELECTRICAL PARTS LIST

BD

NOTE:

- Due to standardization, replacements in the parts list may be different from the parts specified in the diagrams or the components used on the set.
- −XX, −X mean standardized parts, so they may have some difference from the original one.
- Items marked "*" are not stocked since they are seldom required for routine service. Some delay should be anticipated when ordering these items.
- CAPACITORS :
  uF : μF
- RESISTORS
  All resistors are in ohms.
  METAL : metal-film resistor
  METAL OXIDE: Metal Oxide-film resistor
  F : nonflammable
- COILS
  uH : μH
- SEMICONDUCTORS
  In each case, u : μ, for example :
  uA... : μA... , uPA... , μPA... ,
  uPB... , μPB... ,uPC... , μPC... ,
  uPD..., μPD...

AUS : Australian model
G : Germany model
CND : Canadian model

Ref. No.	Part No.	Description			Remarks
*	A-4649-432-A	BD BOARD, COMPLETE (411/511)			
		**********			
*	A-4649-433-A	BD BOARD, COMPLETE (D7)			
		**********			
		< CAPACITOR >			
C101	1-163-005-11	CERAMIC CHIP	470PF	10%	50V
C102	1-163-038-00	CERAMIC CHIP	0.1uF		25V
C103	1-163-005-11	CERAMIC CHIP	470PF	10%	50V
C105	1-135-155-21	TANTALUM CHIP	4.7uF	10%	16V
C106	1-164-346-11	CERAMIC CHIP	1uF		16V
C107	1-164-505-11	CERAMIC CHIP	2.2uF		16V
C108	1-163-035-00	CERAMIC CHIP	0.047uF		50V
C109	1-163-011-11	CERAMIC CHIP	0.0015uF	10%	50V
C110	1-163-017-00	CERAMIC CHIP	0.0047uF	5%	50V
C111	1-163-251-11	CERAMIC CHIP	100PF	5%	50V
C112	1-163-038-00	CERAMIC CHIP	0.1uF		25V
C113	1-163-038-00	CERAMIC CHIP	0.1uF		25V
C123	1-164-232-11	CERAMIC CHIP	0.01uF		50V
C124	1-164-005-11	CERAMIC CHIP	0.47uF		25V
C151	1-163-007-11	CERAMIC CHIP	680PF	10%	50V
C152	1-163-007-11	CERAMIC CHIP	680PF	10%	50V
C153	1-163-038-00	CERAMIC CHIP	0.1uF		25V
C154	1-164-336-11	CERAMIC CHIP	0.33uF		25V
C155	1-163-007-11	CERAMIC CHIP	680PF	10%	50V
C156	1-163-007-11	CERAMIC CHIP	680PF	10%	50V
C157	1-163-033-00	CERAMIC CHIP	0.022uF		50V
C158	1-163-033-00	CERAMIC CHIP	0.022uF		50V
C159	1-163-023-00	CERAMIC CHIP	0.015uF	5%	50V
C160	1-163-019-00	CERAMIC CHIP	0.0068uF	10%	50V
C161	1-163-038-00	CERAMIC CHIP	0.1uF		25V
		< CONNECTOR >			
* CN101	1-568-865-11	SOCKET, CONNECTOR 23P			
CN102	1-568-795-11	SOCKET, CONNECTOR 12P			
		< IC >			
IC101	8-752-351-94	IC CXD2515Q			
IC102	8-759-071-79	IC BA6297AFP-T1			

Ref. No.	Part No.	Description				Remarks
		< RESISTOR >				
R101	1-216-077-00	METAL CHIP	15K	5%	1/10W	
R102	1-216-097-00	METAL CHIP	100K	5%	1/10W	
R103	1-216-077-00	METAL CHIP	15K	5%	1/10W	
R104	1-216-085-00	METAL CHIP	33K	5%	1/10W	
R105	1-216-097-00	METAL CHIP	100K	5%	1/10W	
R106	1-216-061-00	METAL CHIP	3.3K	5%	1/10W	
R107	1-216-061-00	METAL CHIP	3.3K	5%	1/10W	
R108	1-216-073-00	METAL CHIP	10K	5%	1/10W	
R109	1-216-121-00	METAL CHIP	1M	5%	1/10W	
R110	1-216-025-00	METAL CHIP	100	5%	1/10W	
R112	1-216-049-00	METAL CHIP	1K	5%	1/10W	
R113	1-216-077-00	METAL CHIP	15K	5%	1/10W	
R114	1-216-077-00	METAL CHIP	15K	5%	1/10W	
R117	1-216-077-00	METAL CHIP	15K	5%	1/10W	
R118	1-216-077-00	METAL CHIP	15K	5%	1/10W	
R121	1-216-077-00	METAL CHIP	15K	5%	1/10W	
R122	1-216-077-00	METAL CHIP	15K	5%	1/10W	
R123	1-216-073-00	METAL CHIP	10K	5%	1/10W	
R124	1-216-097-00	METAL CHIP	100K	5%	1/10W	
R125	1-216-049-00	METAL CHIP	1K	5%	1/10W	(411/511)
R126	1-216-049-00	METAL CHIP	1K	5%	1/10W	(411/511)
R127	1-216-049-00	METAL CHIP	1K	5%	1/10W	(411/511)
R128	1-216-049-00	METAL CHIP	1K	5%	1/10W	(D7)
R129	1-216-049-00	METAL CHIP	1K	5%	1/10W	(D7)
R130	1-216-049-00	METAL CHIP	1K	5%	1/10W	(D7)
R131	1-216-037-00	METAL CHIP	330	5%	1/10W	
R151	1-216-070-00	METAL CHIP	7.5K	5%	1/10W	
R152	1-216-070-00	METAL CHIP	7.5K	5%	1/10W	
R153	1-216-070-00	METAL CHIP	7.5K	5%	1/10W	
R154	1-216-070-00	METAL CHIP	7.5K	5%	1/10W	
R155	1-216-070-00	METAL CHIP	7.5K	5%	1/10W	
R156	1-216-070-00	METAL CHIP	7.5K	5%	1/10W	
R157	1-216-093-00	METAL CHIP	68K	5%	1/10W	
R158	1-216-076-00	METAL CHIP	13K	5%	1/10W	
R159	1-216-085-00	METAL CHIP	33K	5%	1/10W	

BD DISPLAY

Ref. No.	Part No.	Description				Remarks
R160	1-216-081-00	METAL CHIP	22K	5%	1/10W	
R161	1-216-308-00	METAL CHIP	4.7	5%	1/10W	
R162	1-216-093-00	METAL CHIP	68K	5%	1/10W	
R163	1-216-093-00	METAL CHIP	68K	5%	1/10W	
		< SWITCH >				
S101	1-572-085-11	SWITCH, LEAF (LIMIT)				

****

*	A-4649-563-A	DISPLAY BOARD, COMPLETE (411/511)				
		**********				
*	A-4649-554-A	DISPLAY BOARD, COMPLETE (D7)				
		**********				
		< CAPACITOR >				
C601	1-164-159-11	CERAMIC	0.1uF			50V
C602	1-164-159-11	CERAMIC	0.1uF			50V
C603	1-164-159-11	CERAMIC	0.1uF			50V
C604	1-161-494-00	CERAMIC	0.022uF			25V
C605	1-126-154-11	ELECT	47uF	20%		6.3V
		< CONNECTOR >				
* CN601	1-568-841-11	SOCKET, CONNECTOR 25P (411/511)				
* CN601	1-568-845-11	SOCKET, CONNECTOR 31P (D7)				
CN603	1-750-194-11	CONNECTOR, BOARD TO BOARD 4P (411/511)				
* CN603	1-695-820-11	CONNECTOR, BOARD TO BOARD 12P (D7)				
		< FLUORECENT INDICATOR >				
FLD601	1-519-753-11	INDICATOR TUBE, FLUORESCENT				
		< IC >				
IC601	8-752-843-45	IC CXP82316-016Q (411/511)				
IC601	8-752-843-46	IC CXP82320-015Q (D7)				
		< TRANSISTOR >				
Q601	8-729-900-45	TRANSISTOR DTC114EF				
		< RESISTOR >				
R601	1-249-425-11	CARBON	4.7K	5%	1/4W	F
R602	1-249-429-11	CARBON	10K	5%	1/4W	
R604	1-249-417-11	CARBON	1K	5%	1/4W	F (D7)
R605	1-249-425-11	CARBON	4.7K	5%	1/4W	F
R606	1-249-428-11	CARBON	8.2K	5%	1/4W	F
R607	1-249-428-11	CARBON	8.2K	5%	1/4W	F
R608	1-249-428-11	CARBON	8.2K	5%	1/4W	F
R609	1-249-428-11	CARBON	8.2K	5%	1/4W	F
R610	1-249-428-11	CARBON	8.2K	5%	1/4W	F
R611	1-249-428-11	CARBON	8.2K	5%	1/4W	F
R612	1-249-428-11	CARBON	8.2K	5%	1/4W	F
R613	1-249-418-11	CARBON	1.2K	5%	1/4W	F
R614	1-247-836-11	CARBON	1.6K	5%	1/4W	
R615	1-249-421-11	CARBON	2.2K	5%	1/4W	F
R616	1-249-423-11	CARBON	3.3K	5%	1/4W	F
R617	1-249-426-11	CARBON	5.6K	5%	1/4W	
R618	1-247-856-00	CARBON	11K	5%	1/4W	
R619	1-249-435-11	CARBON	33K	5%	1/4W	
R620	1-249-418-11	CARBON	1.2K	5%	1/4W	F
R621	1-247-836-11	CARBON	1.6K	5%	1/4W	
R622	1-249-421-11	CARBON	2.2K	5%	1/4W	F
R623	1-249-423-11	CARBON	3.3K	5%	1/4W	F
R624	1-249-426-11	CARBON	5.6K	5%	1/4W	
R625	1-247-856-00	CARBON	11K	5%	1/4W	
R626	1-249-435-11	CARBON	33K	5%	1/4W	
R627	1-249-418-11	CARBON	1.2K	5%	1/4W	F
R628	1-247-836-11	CARBON	1.6K	5%	1/4W	
R629	1-249-421-11	CARBON	2.2K	5%	1/4W	F
R630	1-249-423-11	CARBON	3.3K	5%	1/4W	F
R631	1-249-426-11	CARBON	5.6K	5%	1/4W	
R632	1-247-856-00	CARBON	11K	5%	1/4W	
R633	1-249-435-11	CARBON	33K	5%	1/4W	
R634	1-249-418-11	CARBON	1.2K	5%	1/4W	F
R635	1-247-836-11	CARBON	1.6K	5%	1/4W	
R636	1-249-421-11	CARBON	2.2K	5%	1/4W	F
R637	1-249-423-11	CARBON	3.3K	5%	1/4W	F
R638	1-249-426-11	CARBON	5.6K	5%	1/4W	
R639	1-247-856-00	CARBON	11K	5%	1/4W	
R640	1-249-435-11	CARBON	33K	5%	1/4W	
R641	1-249-418-11	CARBON	1.2K	5%	1/4W	F
R642	1-247-836-11	CARBON	1.6K	5%	1/4W	
R643	1-249-421-11	CARBON	2.2K	5%	1/4W	F
R644	1-249-423-11	CARBON	3.3K	5%	1/4W	F
R645	1-249-418-11	CARBON	1.2K	5%	1/4W	F
R646	1-247-836-11	CARBON	1.6K	5%	1/4W	
R647	1-249-421-11	CARBON	2.2K	5%	1/4W	F
R648	1-249-441-11	CARBON	100K	5%	1/4W	
R649	1-249-429-11	CARBON	10K	5%	1/4W	
R650	1-249-428-11	CARBON	8.2K	5%	1/4W	F
R651	1-249-429-11	CARBON	10K	5%	1/4W	(D7)
R652	1-249-417-11	CARBON	1K	5%	1/4W	F
		< SWITCH >				
S601	1-554-303-21	SWITCH, TACTILE (▶▶)				
S602	1-554-303-21	SWITCH, TACTILE (◀◀)				
S603	1-554-303-21	SWITCH, TACTILE (▶▶|)				
S604	1-554-303-21	SWITCH, TACTILE (|◀◀)				
S605	1-554-303-21	SWITCH, TACTILE (■)				

Ref. No.	Part No.	Description	Remarks
S606	1-554-303-21	SWITCH, TACTILE (❚❚)	
S607	1-554-303-21	SWITCH, TACTILE (▶)	
S608	1-554-303-21	SWITCH, TACTILE (OPEN/CLOSE)	
S609	1-554-303-21	SWITCH, TACTILE (17)	
S610	1-554-303-21	SWITCH, TACTILE (18)	
S611	1-554-303-21	SWITCH, TACTILE (19)	
S612	1-554-303-21	SWITCH, TACTILE (20)	
S613	1-554-303-21	SWITCH, TACTILE (>20)	
S614	1-554-303-21	SWITCH, TACTILE (CLEAR)	
S615	1-554-303-21	SWITCH, TACTILE (CHECK)	
S616	1-554-303-21	SWITCH, TACTILE (EDIT/TIME FADE)	
S617	1-554-303-21	SWITCH, TACTILE (9)	
S618	1-554-303-21	SWITCH, TACTILE (10)	
S619	1-554-303-21	SWITCH, TACTILE (11)	
S620	1-554-303-21	SWITCH, TACTILE (12)	
S621	1-554-303-21	SWITCH, TACTILE (13)	
S622	1-554-303-21	SWITCH, TACTILE (14)	
S623	1-554-303-21	SWITCH, TACTILE (15)	
S624	1-554-303-21	SWITCH, TACTILE (16)	
S625	1-554-303-21	SWITCH, TACTILE (1)	
S626	1-554-303-21	SWITCH, TACTILE (2)	
S627	1-554-303-21	SWITCH, TACTILE (3)	
S628	1-554-303-21	SWITCH, TACTILE (4)	
S629	1-554-303-21	SWITCH, TACTILE (5)	
S630	1-554-303-21	SWITCH, TACTILE (6)	
S631	1-554-303-21	SWITCH, TACTILE (7)	
S632	1-554-303-21	SWITCH, TACTILE (8)	
S633	1-554-303-21	SWITCH, TACTILE (SHUFFLE)	
S634	1-554-303-21	SWITCH, TACTILE (CONTINNE)	
S635	1-554-303-21	SWITCH, TACTILE (PROGRAM)	
S636	1-554-303-21	SWITCH, TACTILE (PEAK SEARCH)	
S637	1-554-303-21	SWITCH, TACTILE (MUSIC SCAN)	
S638	1-554-303-21	SWITCH, TACTILE (TIME)	
S639	1-554-303-21	SWITCH, TACTILE (REPEAT	
S640	1-554-303-21	SWITCH, TACTILE (FADER)	
S641	1-554-303-21	SWITCH, TACTILE (A. SPACE/A. CUE)	
		< VIBRATOR >	
X601	1-579-175-11	VIBRATOR, CERAMIC 10MHz	

****

* 1-645-746-12 HP BOARD (411:AEP, UK, G/511/D7)
****

< CAPACITOR >

C371	1-164-159-11	CERAMIC	0.1uF		50V
C471	1-162-294-31	CERAMIC	0.001uF	10%	50V
C571	1-162-294-31	CERAMIC	0.001uF	10%	50V

Ref. No.	Part No.	Description				Remarks
		< JACK >				
J471	1-568-519-41	JACK, LARGE TYPE (HEADPHONES)				
		< COIL >				
L471	1-410-397-21	FERRITE BEAD INDUCTOR (D7:CND)				
L571	1-410-397-21	FERRITE BEAD INDUCTOR (D7:CND)				
		< RESISTOR >				
R471	1-249-402-11	CARBON	56	5%	1/4W	F
R571	1-249-402-11	CARBON	56	5%	1/4W	F

****

* 1-645-744-12 KEY BOARD
****

* 4-955-854-01 HOLDER (LED) (D7)

< CAPACITOR >

C701	1-161-494-00	CERAMIC	0.022uF	25V

< CONNECTOR >

CN701	1-750-185-11	CONNECTOR, BOARD TO BOARD 4P (411/511)	
* CN701	1-695-821-11	CONNECTOR, BOARD TO BOARD 12P (D7)	

< DIODE >

D701	8-719-301-52	LED	SEL2810A-C (D7)
D702	8-719-301-52	LED	SEL2810A-C (D7)
D703	8-719-301-52	LED	SEL2810A-C (D7)
D704	8-719-301-52	LED	SEL2810A-C (D7)
D705	8-719-301-52	LED	SEL2810A-C (D7)
D706	8-719-301-52	LED	SEL2810A-C (D7)
D707	8-719-301-52	LED	SEL2810A-C (D7)

< RESISTOR >

R702	1-249-411-11	CARBON	330	5%	1/4W	(D7)
R703	1-249-435-11	CARBON	33K	5%	1/4W	(D7)
R704	1-247-856-00	CARBON	11K	5%	1/4W	(D7)
R705	1-249-426-11	CARBON	5.6K	5%	1/4W	(D7)
R706	1-249-423-11	CARBON	3.3K	5%	1/4W F	(D7)
R707	1-249-421-11	CARBON	2.2K	5%	1/4W F	(D7)
R708	1-247-836-11	CARBON	1.6K	5%	1/4W	(D7)
R709	1-249-418-11	CARBON	1.2K	5%	1/4W F	(D7)

< SWITCH >

S701	1-571-305-11	SWITCH, PUSH (1 KEY)	(POWER)
S702	1-554-303-21	SWITCH, TACTILE (D7)	(HALL)
S703	1-554-303-21	SWITCH, TACTILE (D7)	(CHURCH)
S704	1-554-303-21	SWITCH, TACTILE (D7)	(GAZZ CLUB)
S705	1-554-303-21	SWITCH, TACTILE (D7)	(STADIUM)

Ref. No.	Part No.	Description	Remarks
S706	1-554-303-21	SWITCH, TACTILE (D7)	(DANCE)
S707	1-554-303-21	SWITCH, TACTILE (D7)	(LIVE ROOM)
S708	1-554-303-21	SWITCH, TACTILE (D7)	(SOFT)
S709	1-554-303-21	SWITCH, TACTILE (D7)	(DIRECT)

****

*	1-645-721-11	LOADING BOARD (411/D7)	
		**********	
*	1-646-970-11	LOADING BOARD (511)	
		**********	
		< CONNECTOR >	
* CN151	1-568-943-11	PIN, CONNECTOR 5P	
		< SWITCH >	
S151	1-572-086-11	SWITCH, LEAF	
S152	1-572-086-11	SWITCH, LEAF	

****

*	1-645-745-12	M. VOL BOARD (411:AEP, UK, G/511/D7)	
		**********	
		< CAPACITOR >	
C351	1-124-994-11	ELECT 100uF 20% 10V	
C352	1-161-494-00	CERAMIC 0.022uF 25V	
C353	1-164-159-11	CERAMIC 0.1uF 50V	
C451	1-124-994-11	ELECT 100uF 20% 10V	
C551	1-124-994-11	ELECT 100uF 20% 10V	

****

*	A-4649-561-A	MAIN BOARD, COMPLETE (411:US)	
		**********	
*	A-4649-565-A	MAIN BOARD, COMPLETE (411:AEP)	
		**********	
*	A-4649-566-A	MAIN BOARD, COMPLETE (411:E)	
		**********	
*	A-4649-608-A	MAIN BOARD, COMPLETE (411:AUS)	
		**********	
*	A-4649-667-A	MAIN BOARD, COMPLETE (411:UK, G)	
		**********	
*	A-4649-567-A	MAIN BOARD, COMPLETE (511:AEP, AUS)	
		**********	
*	A-4649-568-A	MAIN BOARD, COMPLETE (511:E)	
		**********	
*	A-4649-577-A	MAIN BOARD, COMPLETE (D7:CND)	
		**********	
*	A-4649-553-A	MAIN BOARD, COMPLETE (D7:AEP, AUS)	
		**********	
*	A-4649-556-A	MAIN BOARD, COMPLETE (D7:E)	
		**********	

Ref. No.	Part No.	Description	Remarks
*	3-309-144-31	HEAT SINK (411)	
*	4-941-237-01	HEAT SINK (511/D7)	
	7-682-547-09	SCREW +B 3X6 (511/D7)	
	7-685-871-01	SCREW +BVTT 3X6 (S) (411)	
		< CAPACITOR >	
C201	1-124-572-11	ELECT 100uF 20% 63V	
C202	1-126-059-11	ELECT 10uF 20% 50V	
C203	1-124-360-00	ELECT 1000uF 20% 16V	
C204	1-126-937-11	ELECT 4700uF 20% 16V	
C205	1-126-163-11	ELECT 4.7uF 20% 50V	
C206	1-126-059-11	ELECT 10uF 20% 50V	
C207	1-126-059-11	ELECT 10uF 20% 50V	
C208	1-124-997-11	ELECT 470uF 20% 10V	
C209	1-124-997-11	ELECT 470uF 20% 10V	
C210	1-126-923-11	ELECT 220uF 20% 10V	
C211	1-124-997-11	ELECT 470uF 20% 10V	
C212	1-161-494-00	CERAMIC 0.022uF 25V	(511/D7)
C213	1-124-997-11	ELECT 470uF 20% 10V	
C220	1-164-159-11	CERAMIC 0.1uF 50V	
C221	1-164-159-11	CERAMIC 0.1uF 50V	
C223	1-164-159-11	CERAMIC 0.1uF 50V	
C224	1-164-159-11	CERAMIC 0.1uF 50V	(411:US/D7:CND)
C225	1-164-159-11	CERAMIC 0.1uF 50V	
C226	1-164-159-11	CERAMIC 0.1uF 50V	(411:US/D7:CND)
C227	1-164-159-11	CERAMIC 0.1uF 50V	(411:US/D7:CND)
C301	1-164-159-11	CERAMIC 0.1uF 50V	
C302	1-164-159-11	CERAMIC 0.1uF 50V	
C304	1-164-159-11	CERAMIC 0.1uF 50V	
C305	1-164-159-11	CERAMIC 0.1uF 50V	
C311	1-162-306-11	CERAMIC 0.01uF 20% 16V	
C312	1-161-494-00	CERAMIC 0.022uF 25V	
C313	1-162-290-31	CERAMIC 470PF 10% 50V	
C321	1-162-290-31	CERAMIC 470PF 10% 50V	
C322	1-164-159-11	CERAMIC 0.1uF 50V	
C323	1-126-101-11	ELECT 100uF 20% 16V	(411/511)
C323	1-126-923-11	ELECT 220uF 20% 10V	(D7)
C324	1-164-159-11	CERAMIC 0.1uF 50V	(411:US/D7)
C324	1-161-494-00	CERAMIC 0.022uF 25V	(EXCEPT 411:US/D7)
C325	1-126-101-11	ELECT 100uF 20% 16V	(411/511)
C325	1-126-923-11	ELECT 220uF 20% 10V	(D7)
C326	1-161-494-00	CERAMIC 0.022uF 25V	(EXCEPT 411:US/D7)
C326	1-164-159-11	CERAMIC 0.1uF 50V	(411:US/D7)

Ref. No.	Part No.	Description			Remarks
C327	1-124-994-11	ELECT	100uF	20%	10V
C328	1-164-159-11	CERAMIC	0.1uF		50V (411:US/D7)
C328	1-161-494-00	CERAMIC	0.022uF		25V (EXCEPT 411:US/D7)
C329	1-162-196-31	CERAMIC	5.6PF	10%	50V (411/511)
C329	1-162-202-31	CERAMIC	13PF	5%	50V (D7)
C330	1-162-196-31	CERAMIC	5.6PF	10%	50V (411/511)
C330	1-162-202-31	CERAMIC	13PF	5%	50V (D7)
C331	1-164-159-11	CERAMIC	0.1uF		50V
C334	1-164-159-11	CERAMIC	0.1uF		50V
C335	1-164-159-11	CERAMIC	0.1uF		50V
C336	1-126-163-11	ELECT	4.7uF	20%	50V (411/511)
C336	1-126-022-11	ELECT	47uF	20%	16V (D7)
C341	1-130-495-00	MYLAR	0.1uF	5%	50V
C342	1-130-495-00	MYLAR	0.1uF	5%	50V
C343	1-161-494-00	CERAMIC	0.022uF		25V
C344	1-161-494-00	CERAMIC	0.022uF		25V
C395	1-164-159-11	CERAMIC	0.1uF		50V (411:US/D7:CND)
C401	1-164-159-11	CERAMIC	0.1uF		50V (411:US/D7)
C401	1-161-494-00	CERAMIC	0.022uF		25V (EXCEPT 411:US/D7)
C402	1-124-994-11	ELECT	100uF	20%	10V (411/511)
C403	1-162-282-31	CERAMIC	100PF	10%	50V (411/511)
C403	1-162-280-31	CERAMIC	82PF	10%	50V (D7)
C404	1-162-215-31	CERAMIC	47PF	5%	50V (411/511)
C404	1-162-210-31	CERAMIC	30PF	5%	50V (D7)
C405	1-162-215-31	CERAMIC	47PF	5%	50V (411/511)
C405	1-162-210-31	CERAMIC	30PF	5%	50V (D7)
C406	1-130-479-00	MYLAR	0.0047uF	5%	50V (411/D7)
C406	1-106-359-00	MYLAR	4700PF	5%	200V (511)
C407	1-130-472-00	MYLAR	0.0012uF	5%	50V
C408	1-126-022-11	ELECT	47uF	20%	16V (411/D7)
C408	1-124-910-11	ELECT	47uF	20%	50V (511)
C409	1-102-115-00	CERAMIC	560PF	10%	50V
C501	1-164-159-11	CERAMIC	0.1uF		50V (411:US, D7)
C501	1-161-494-00	CERAMIC	0.022uF		25V (EXCEPT 411:US/D7)
C502	1-124-994-11	ELECT	100uF	20%	10V
C503	1-162-282-31	CERAMIC	100PF	10%	50V (411/511)
C503	1-162-280-31	CERAMIC	82PF	10%	50V (D7)
C504	1-162-215-31	CERAMIC	47PF	5%	50V (411/511)
C504	1-162-210-31	CERAMIC	30PF	5%	50V (D7)
C505	1-162-215-31	CERAMIC	47PF	5%	50V (411/511)
C505	1-162-210-31	CERAMIC	30PF	5%	50V (D7)
C506	1-130-479-00	MYLAR	0.0047uF	5%	50V (411/D7)
C506	1-106-359-00	MYLAR	4700PF	5%	200V (511)
C507	1-130-472-00	MYLAR	0.0012uF	5%	50V
C508	1-126-022-11	ELECT	47uF	20%	16V (411/D7)
C508	1-124-910-11	ELECT	47uF	20%	50V (511)

Ref. No.	Part No.	Description			Remarks
C509	1-102-115-00	CERAMIC	560PF	10%	50V
C801	1-124-463-00	ELECT	0.1uF	20%	50V (D7)
C802	1-124-463-00	ELECT	0.1uF	20%	50V (D7)
C804	1-126-022-11	ELECT	47uF	20%	16V (D7)
C805	1-162-219-31	CERAMIC	68PF	5%	50V (D7)
C806	1-126-012-11	ELECT	470uF	20%	16V
C807	1-161-494-00	CERAMIC	0.022uF		25V (D7)
C819	1-162-208-31	CERAMIC	24PF	5%	50V (D7)
C820	1-161-494-00	CERAMIC	0.022uF		25V (D7)
C821	1-164-159-11	CERAMIC	0.1uF		50V (D7)
C822	1-124-994-11	ELECT	100uF	20%	10V (D7)
C823	1-164-159-11	CERAMIC	0.1uF		50V (D7)
C824	1-162-290-31	CERAMIC	470PF	10%	50V (D7)
C825	1-164-159-11	CERAMIC	0.1uF		50V (D7)
C826	1-124-994-11	ELECT	100uF	20%	10V (D7)
C827	1-164-159-11	CERAMIC	0.1uF		50V (D7)
C828	1-124-994-11	ELECT	100uF	20%	10V (D7)
C829	1-164-159-11	CERAMIC	0.1uF		50V (D7)
C832	1-164-159-11	CERAMIC	0.1uF		50V (D7)
C833	1-164-159-11	CERAMIC	0.1uF		50V (D7)
C834	1-164-159-11	CERAMIC	0.1uF		50V (D7)
C901	1-124-463-00	ELECT	0.1uF	20%	50V (D7)
C902	1-124-463-00	ELECT	0.1uF	20%	50V (D7)
C904	1-126-022-11	ELECT	47uF	20%	16V (D7)
C905	1-162-219-31	CERAMIC	68PF	5%	50V (D7)
C906	1-126-012-11	ELECT	470uF	20%	16V (D7)
C907	1-161-494-00	CERAMIC	0.022uF		25V (D7)

< CONNECTOR >

* CN201	1-580-230-11	PIN, CONNECTOR (PC BOARD) 3P	
* CN301	1-568-839-11	SOCKET, CONNECTOR 23P	
* CN302	1-568-841-11	SOCKET, CONNECTOR 25P	(411/511)
* CN302	1-568-845-11	SOCKET, CONNECTOR 31P	(D7)
* CN303	1-568-954-11	PIN, CONNECTOR 5P	
* CN304	1-564-708-11	PIN, CONNECTOR (SMALL TYPE) 6P	(411:US, E, AUS)
* CN305	1-568-832-11	SOCKET, CONNECTOR 13P	(411:AEP, UK, G/511/D7)

< DIODE >

D201	8-719-200-82	DIODE	11ES2
D202	8-719-110-03	DIODE	RD7.5ES-B2
D203	8-719-200-82	DIODE	11ES2
D204	8-719-200-82	DIODE	11ES2
D205	8-719-200-82	DIODE	11ES2
D206	8-719-200-82	DIODE	11ES2
D208	8-719-109-89	DIODE	RD5.6ES-B2
D209	8-719-987-63	DIODE	1N4148M
D210	8-719-110-72	DIODE	RD30ES-B2
D211	8-719-987-63	DIODE	1N4148M
D311	8-719-109-81	DIODE	RD4.7ES-B2 (411/D7)
D311	8-719-109-75	DIODE	RD4.3ES-B2 (511)

MAIN

Ref. No.	Part No.	Description	Remarks
D321	8-719-987-63	DIODE 1N4148M	
D328	8-719-987-63	DIODE 1N4148M (D7)	

< IC >

Ref. No.	Part No.	Description	Remarks
IC202	8-759-630-21	IC M5290P-16	
IC203	8-759-605-00	IC M5F78M07	
IC204	8-759-145-58	IC uPC4558C (511/D7)	
IC301	8-759-822-09	IC LB1641	
IC302	8-749-921-12	IC GP1F32T(411:US, AEP, E, AUS/511/D7)	(DIGITAL OUT)
IC303	8-752-360-60	IC CXD2565M (411/511)	
IC303	8-752-359-50	IC CXD2564AM (D7)	
IC401	8-759-145-58	IC uPC4558C	
IC402	8-759-145-58	IC uPC4558C (411/D7)	
IC402	8-759-900-72	IC NE5532P (511)	
IC801	8-759-917-18	IC SN74HCU04N (D7)	
IC802	8-752-341-99	IC CXD2701Q (D7)	
IC803	8-759-508-41	IC MS51464-10NC (D7)	
IC804	8-759-916-29	IC SN74HC74AN (D7)	
IC805	8-759-900-72	IC NE5532P (D7)	

< JACK >

Ref. No.	Part No.	Description	Remarks
* J401	1-569-442-11	JACK, PIN 2P (LINE OUT)(411:US, E, AUS)	
* J401	1-569-443-11	JACK, PIN 4P (LINE OUT)	(411:AEP, UK, G/511/D7)

< COIL >

Ref. No.	Part No.	Description	Remarks
L301	1-408-403-00	INDUCTOR 3.3uH(411:US, AEP, E, AUS/511/D7)	
L302	1-410-970-11	INDUCTOR 6.8uH(EXCEPT 411:US/D7:CND)	
L401	1-412-473-41	INDUCTOR 0uH	
L402	1-412-473-41	INDUCTOR 0uH	
L501	1-412-473-41	INDUCTOR 0uH	
L502	1-412-473-41	INDUCTOR 0uH	
L801	1-408-403-00	INDUCTOR 3.3uH	
L803	1-408-403-00	INDUCTOR 3.3uH (D7)	
L804	1-408-403-00	INDUCTOR 3.3uH (D7)	

< TRANSISTOR >

Ref. No.	Part No.	Description	Remarks
Q201	8-729-119-76	TRANSISTOR 2SA1175-HFE	
Q202	8-729-140-96	TRANSISTOR KSC1008	
Q203	8-729-141-83	TRANSISTOR 2SA473	
Q204	8-729-900-65	TRANSISTOR DTA144ES	
Q205	8-729-900-89	TRANSISTOR DTC144ES	
Q206	8-729-900-89	TRANSISTOR DTC144ES	
Q207	8-729-281-52	TRANSISTOR 2SC1815-Y (511/D7)	
Q208	8-729-019-64	TRANSISTOR 2SB1041T103	
Q301	8-729-900-89	TRANSISTOR DTC144ES (D7:E)	
Q302	8-729-900-65	TRANSISTOR DTA144ES	
Q401	8-729-900-65	TRANSISTOR DTA144ES	
Q402	8-729-900-74	TRANSISTOR DTC143TS	
Q403	8-729-900-74	TRANSISTOR DTC143TS	
Q404	8-729-900-74	TRANSISTOR DTC143TS (411)	
Q404	8-729-231-55	TRANSISTOR 2SC2878-AB (511/D7)	
Q501	8-729-900-65	TRANSISTOR DTA144ES	
Q502	8-729-900-74	TRANSISTOR DTC143TS	
Q503	8-729-900-74	TRANSISTOR DTC143TS	
Q504	8-729-900-74	TRANSISTOR DTC143TS (411)	
Q504	8-729-231-55	TRANSISTOR 2SC2878-AB (511/D7)	
Q801	8-729-231-55	TRANSISTOR 2SC2878-AB (D7)	
Q802	8-729-231-55	TRANSISTOR 2SC2878-AB (D7)	
Q851	8-729-900-63	TRANSISTOR DTA124ES (D7)	
Q852	8-729-900-63	TRANSISTOR DTA124ES (D7)	
Q901	8-729-231-55	TRANSISTOR 2SC2878-AB (D7)	
Q902	8-729-231-55	TRANSISTOR 2SC2878-AB (D7)	

< RESISTOR >

Ref. No.	Part No.	Description	Remarks
R201	1-249-435-11	CARBON 33K 5% 1/4W	
R202	1-249-438-11	CARBON 56K 5% 1/4W	
R203	1-249-429-11	CARBON 10K 5% 1/4W	
R204	1-249-425-11	CARBON 4.7K 5% 1/4W F	
R205	1-249-425-11	CARBON 4.7K 5% 1/4W F	
R208	1-249-423-11	CARBON 3.3K 5% 1/4W F	
R209	1-249-413-11	CARBON 470 5% 1/4W F	
R210	1-249-417-11	CARBON 1K 5% 1/4W F	
R211	1-249-417-11	CARBON 1K 5% 1/4W F	(511/D7)
R212	1-249-429-11	CARBON 10K 5% 1/4W	(511/D7)
R213	1-249-410-11	CARBON 270 5% 1/4W F	(511/D7)
R214	1-249-432-11	CARBON 18K 5% 1/4W	
R215	1-249-432-11	CARBON 18K 5% 1/4W	
R300	1-249-405-11	CARBON 100 5% 1/4W F	(411:US/D7:CND)
R301	1-249-417-11	CARBON 1K 5% 1/4W F	
R302	1-249-417-11	CARBON 1K 5% 1/4W F	
R303	1-249-417-11	CARBON 1K 5% 1/4W F	
R304	1-249-417-11	CARBON 1K 5% 1/4W F	
R306	1-249-418-11	CARBON 1.2K 5% 1/4W F	
R308	1-249-405-11	CARBON 100 5% 1/4W F	
R311	1-249-393-11	CARBON 10 5% 1/4W F	(411/D7)
R311	1-249-390-11	CARBON 5.6 5% 1/6W F	(511:AEP, E, AUS)
R321	1-249-414-11	CARBON 560 5% 1/4W	(411:US)
R321	1-249-413-11	CARBON 470 5% 1/4W F	(EXCEPT 411:US/511)
R321	1-249-422-11	CARBON 2.7K 5% 1/4W F	(D7)
R322	1-249-425-11	CARBON 4.7K 5% 1/4W F	(411/511)
R322	1-247-903-91	CARBON 1M 5% 1/4W	(D7)
R323	1-249-429-11	CARBON 10K 5% 1/4W	
R324	1-249-441-11	CARBON 100K 5% 1/4W	
R325	1-249-405-11	CARBON 100 5% 1/4W F	(411/511)
R328	1-247-895-00	CARBON 470K 5% 1/4W	(D7)
R401	1-249-441-11	CARBON 100K 5% 1/4W	
R402	1-249-425-11	CARBON 4.7K 5% 1/4W F	(511/D7)
R403	1-249-436-11	CARBON 39K 5% 1/4W	
R404	1-249-436-11	CARBON 39K 5% 1/4W	
R405	1-249-431-11	CARBON 15K 5% 1/4W	(411/511)
R405	1-249-432-11	CARBON 18K 5% 1/4W	(D7)
R406	1-249-431-11	CARBON 15K 5% 1/4W	(411/511)

Ref. No.	Part No.	Description				Remarks
R406	1-249-432-11	CARBON	18K	5%	1/4W	(D7)
R407	1-249-437-11	CARBON	47K	5%	1/4W	(411/511)
R407	1-249-439-11	CARBON	68K	5%	1/4W	(D7)
R408	1-249-437-11	CARBON	47K	5%	1/4W	(411/511)
R408	1-249-439-11	CARBON	68K	5%	1/4W	(D7)
R409	1-249-419-11	CARBON	1.5K	5%	1/4W	F
R410	1-249-419-11	CARBON	1.5K	5%	1/4W	F
R411	1-247-887-00	CARBON	220K	5%	1/4W	
R412	1-249-409-11	CARBON	220	5%	1/4W	F
R413	1-249-409-11	CARBON	220	5%	1/4W	F
R414	1-249-393-11	CARBON	10	5%	1/4W	F
R415	1-249-413-11	CARBON	470	5%	1/4W	F
R416	1-249-413-11	CARBON	470	5%	1/4W	F (411:AEP, UK, G/511/D7)
R501	1-249-441-11	CARBON	100K	5%	1/4W	
R502	1-249-425-11	CARBON	4.7K	5%	1/4W	F (511/D7)
R503	1-249-436-11	CARBON	39K	5%	1/4W	
R504	1-249-436-11	CARBON	39K	5%	1/4W	
R505	1-249-431-11	CARBON	15K	5%	1/4W	(411/511)
R505	1-249-432-11	CARBON	18K	5%	1/4W	(D7)
R506	1-249-431-11	CARBON	15K	5%	1/4W	(411/511)
R506	1-249-432-11	CARBON	18K	5%	1/4W	(D7)
R507	1-249-437-11	CARBON	47K	5%	1/4W	(411/511)
R507	1-249-439-11	CARBON	68K	5%	1/4W	(D7)
R508	1-249-437-11	CARBON	47K	5%	1/4W	(411/511)
R508	1-249-439-11	CARBON	68K	5%	1/4W	(D7)
R509	1-249-419-11	CARBON	1.5K	5%	1/4W	F
R510	1-249-419-11	CARBON	1.5K	5%	1/4W	F
R511	1-247-887-00	CARBON	220K	5%	1/4W	
R512	1-249-409-11	CARBON	220	5%	1/4W	F
R513	1-249-409-11	CARBON	220	5%	1/4W	F
R514	1-249-393-11	CARBON	10	5%	1/4W	F
R515	1-249-413-11	CARBON	470	5%	1/4W	F
R516	1-249-413-11	CARBON	470	5%	1/4W	F (411:AEP, UK, G/511/D7)
R801	1-249-425-11	CARBON	4.7K	5%	1/4W	F (D7)
R802	1-249-425-11	CARBON	4.7K	5%	1/4W	F (D7)
R804	1-249-421-11	CARBON	2.2K	5%	1/4W	F (D7)
R805	1-249-422-11	CARBON	2.7K	5%	1/4W	F (D7)
R806	1-247-836-11	CARBON	1.6K	5%	1/4W	(D7)
R807	1-249-417-11	CARBON	1K	5%	1/4W	F (D7)
R810	1-249-441-11	CARBON	100K	5%	1/4W	(D7)
R811	1-249-419-11	CARBON	1.5K	5%	1/4W	F (D7)
R812	1-249-405-11	CARBON	100	5%	1/4W	F (D7)
R820	1-249-417-11	CARBON	1K	5%	1/4W	F (D7)
R821	1-249-417-11	CARBON	1K	5%	1/4W	F (D7)
R822	1-249-413-11	CARBON	470	5%	1/4W	F (D7)
R823	1-247-903-91	CARBON	1M	5%	1/4W	(D7)
R824	1-249-417-11	CARBON	1K	5%	1/4W	F (D7)
R825	1-249-417-11	CARBON	1K	5%	1/4W	F (D7)
R826	1-249-417-11	CARBON	1K	5%	1/4W	F (D7)
R827	1-249-417-11	CARBON	1K	5%	1/4W	F (D7)
R828	1-249-417-11	CARBON	1K	5%	1/4W	F (D7)
R829	1-249-417-11	CARBON	1K	5%	1/4W	F (D7)
R851	1-249-417-11	CARBON	1K	5%	1/4W	F (D7)
R852	1-249-417-11	CARBON	1K	5%	1/4W	F (D7)
R855	1-249-417-11	CARBON	1K	5%	1/4W	F (D7)
R856	1-249-417-11	CARBON	1K	5%	1/4W	F (D7)
R857	1-249-441-11	CARBON	100K	5%	1/4W	(D7)
R858	1-249-441-11	CARBON	100K	5%	1/4W	(D7)
R901	1-249-425-11	CARBON	4.7K	5%	1/4W	F (D7)
R902	1-249-425-11	CARBON	4.7K	5%	1/4W	F (D7)
R904	1-249-421-11	CARBON	2.2K	5%	1/4W	F (D7)
R905	1-249-422-11	CARBON	2.7K	5%	1/4W	F (D7)
R906	1-247-836-11	CARBON	1.6K	5%	1/4W	(D7)
R907	1-249-417-11	CARBON	1K	5%	1/4W	F (D7)
R910	1-249-441-11	CARBON	100K	5%	1/4W	(D7)
R911	1-249-419-11	CARBON	1.5K	5%	1/4W	F (D7)
R912	1-249-405-11	CARBON	100	5%	1/4W	F (D7)

< SWITCH >

⚠S201	1-571-722-11	SWITCH, VOLTAGE SELECTION (D7:E/411:E/511:E) (VOLTAGE SELECTOR)

< VIBRATOR >

X301	1-579-834-11	VIBRATOR, CRYSTAL 22MHz (411/511)
X301	1-579-314-11	VIBRATOR, CRYSTAL 22MHz (D7)

****

* 1-645-747-12 VR BOARD (411:US, E, AUS)
****

< CAPACITOR >

C392	1-164-159-11	CERAMIC	0.1uF		50V
C491	1-124-994-11	ELECT	100uF	20%	10V
C492	1-161-294-31	CERAMIC	1000P	10%	50V (411:E, AUS)
C492	1-161-377-00	CERAMIC	0.0047uF	30%	16V (411:US)
C591	1-124-994-11	ELECT	100uF	20%	10V
C592	1-161-294-31	CERAMIC	1000P	10%	50V (411:E, AUS)
C592	1-161-377-00	CERAMIC	0.0047uF	30%	16V (411:US)

< CONNECTOR >

* CN391	1-564-708-11	PIN, CONNECTOR (SMALL TYPE) 6P

< IC >

IC491	8-759-981-89	IC RC4556S

< JACK >

J491	1-568-519-41	JACK, LARGE TYPE (HEADPHONES)

Note:
The components identified by mark ⚠ or dotted line with mark ⚠ are critical for safety. Replace only with part number specified.

Note:
Les composants identifiés par une marque ⚠ sont critiques pour la sécurité. Ne les remplacer que par une pièce portant le numéro spécifié.

VR

Ref. No.	Part No.	Description				Remarks
L391	1-410-397-21	FERRITE BEAD INDUCTOR (411:US)				
L491	1-410-397-21	FERRITE BEAD INDUCTOR (411:US)				
L591	1-410-397-21	FERRITE BEAD INDUCTOR (411:US)				
		< RESISTOR >				
R391	1-249-399-11	CARBON	33	5%	1/4W	F
R392	1-249-399-11	CARBON	33	5%	1/4W	F
R491	1-249-435-11	CARBON	33K	5%	1/4W	
R492	1-249-432-11	CARBON	18K	5%	1/4W	
R493	1-249-431-11	CARBON	15K	5%	1/4W	
R494	1-249-438-11	CARBON	56K	5%	1/4W	
R495	1-249-402-11	CARBON	56	5%	1/4W	F
R591	1-249-435-11	CARBON	33K	5%	1/4W	
R592	1-249-432-11	CARBON	18K	5%	1/4W	
R593	1-249-431-11	CARBON	15K	5%	1/4W	
R594	1-249-438-11	CARBON	56K	5%	1/4W	
R595	1-249-402-11	CARBON	56	5%	1/4W	F
		< VARIABLE RESISTOR >				
RV491	1-223-194-11	RES, VAR, CARBON 20K/20K (PHONE LEVEL)				

****

MISCELLANEOUS
****

17	1-696-734-11	WIRE (FLAT TYPE) (25 CORE) (411/511)
17	1-696-735-11	WIRE (FLAT TYPE) (31 CORE) (D7)
18	1-696-733-11	WIRE (FLAT TYPE) (23 CORE)
20	1-751-395-11	WIRE (FLAT TYPE) (13 CORE) (411:AEP, UK, G/511/D7)
⚠28	1-575-651-21	CORD, POWER (411:AEP, G/511:AEP, G/D7:AEP, G)
⚠28	1-590-836-11	CORD, POWER (411:US/D7:CND)
⚠28	1-696-027-11	CORD, POWER (411:E/511:E/D7:E)
⚠28	1-696-845-11	CORD, POWER (411:AUS/511:AUS/D7:AUS)
⚠28	1-696-907-11	CORD, POWER (411:UK)
* 61	1-452-538-11	MAGNET
* 113	1-452-538-11	MAGNET
154	1-575-001-11	WIRE, FLAT TYPE (12 CORE)
⚠157	8-848-144-11	DEVICE, OPTICAL KSS-240A
M101	X-4917-504-1	MOTOR ASSY (SLED)
M102	X-4917-523-3	MOTOR ASSY (SPINDLE)
M151	A-4604-363-A	MOTOR (L) ASSY
M151	A-4604-363-A	MOTOR (L) ASSY
⚠T901	1-423-516-11	TRANSFORMER, POWER (411:US/D7:CND)
⚠T901	1-423-518-11	TRANSFORMER, POWER (411:E/511:E/D7:E)
⚠T901	1-449-922-11	TRANSFORMER, POWER (411:AEP, AUS /511:AEP, AUS/D7:AEP, AUS) (MADE IN JAPAN)
⚠T901	1-449-925-11	TRANSFORMER, POWER (411:F:AEP, UK, G /511:AEP, G/D7:AEP, G) (MADE IN FRANCE)

****

Ref. No.	Part No.	Description	Remarks
		ACCESSORIES & PACKING MATERIALS	
		**********	
	1-465-867-11	REMOTE COMMANDER (RM-D597)	(411:AEP, UK, G/511)
	1-465-868-11	REMOTE COMMANDER (RM-D297)	(411:US, AUS, E)
	1-466-825-11	REMOTE COMMANDER (RM-D520)	(D7)
	1-696-170-11	CORD, CONNECTION	
	2-181-754-01	COVER, BATTERY (RM-D597)	(411, 511)
	3-707-584-01	COVER, BATTERY (RM-D297)	(411:E)
	3-756-069-11	MANUAL, INSTRUCTION (ENGLISH/FRENCH /SPANISH/CHINESE)	(411/511/D7:CND, AEP, E, AUS)
	3-756-069-21	MANUAL, INSTRUCTION (ENGLISH)	(411:US)
	3-756-069-41	MANUAL, INSTRUCTION (GERMAN/DUTCH /ITALIAN/PORTUGUESE)	(411/511/D7:AEP)
	3-756-069-51	MANUAL, INSTRUCTION (ENGLISH/FRENCH/SPANISH)	(411/511/D7:AEP, UK)
	3-756-069-61	MANUAL, INSTRUCTION (GERMAN/DUTCH /ITALIAN/PORTUGUESE)	(411/511/D7:AEP) (MODE IN FRENCH)
	4-941-762-11	COVER, BATTERY (RM-D520)	(D7)
*	4-941-925-01	CUSHION	(411/511/D7:CND, AEP, AUS, G)
*	4-956-947-01	INDIVIDUAL CARTON	(411)
*	4-956-947-11	INDIVIDUAL CARTON	(D7)
*	4-956-947-31	INDIVIDUAL CARTON	(511)

****

****
HARDWARE LIST
****

#1	7-682-548-09	SCREW +BVTT 3X8 (S)
#2	7-685-647-79	SCREW +BVTP 3X10 TYPE2 N-S
#3	7-682-547-09	SCREW +B 3X6
#4	7-621-775-10	SCREW +B 2.6X4
#5	7-621-255-15	SCREW +P 2X3

Note:	Note:
The components identified by mark ⚠ or dotted line with mark ⚠ are critical for safety. Replace only with part number specified.	Les composants identifiés par une marque ⚠ sont critiques pour la sécurité. Ne les remplacer que par une pièce portant le numéro spécifié.

English
93C16101-1
Printed in Japan
© 1993.3
Published by Audio Corporate Planning Group

9-957-764-11

Sony Corporation
Audio Group