MCU

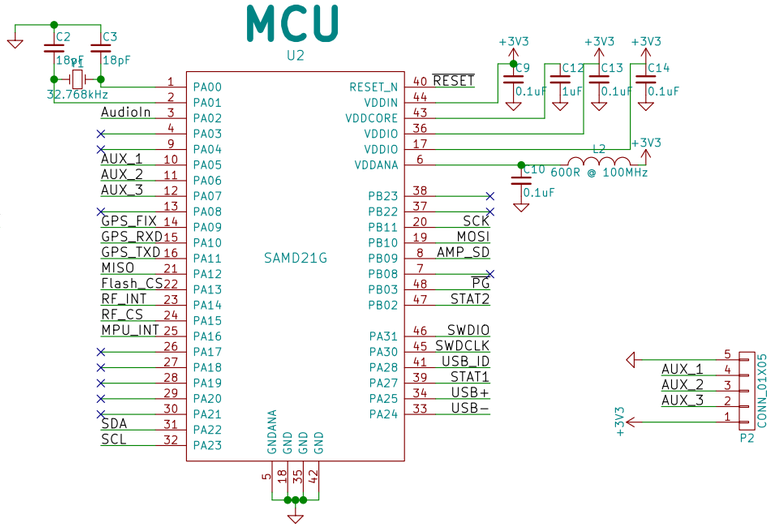

POWER MANAGEMENT

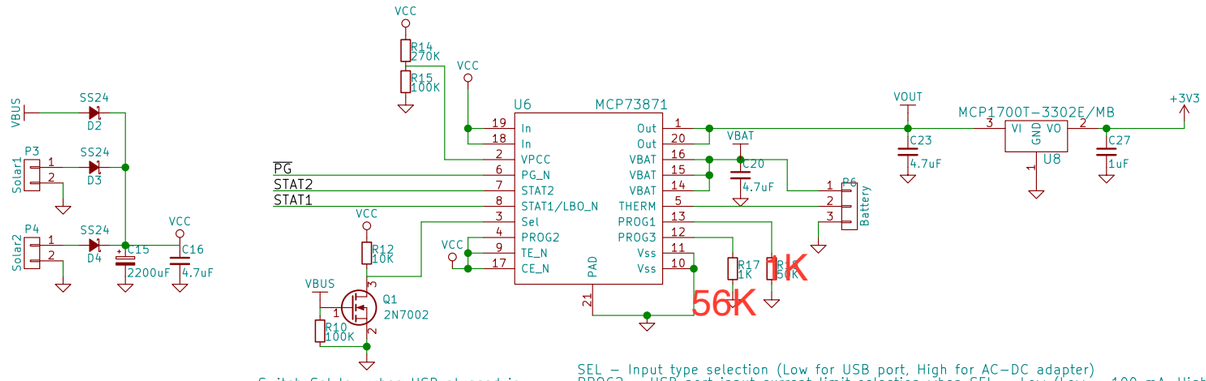

Switch Sel low when USB plugged in reducing max current draw.

SEL – Input type selection (Low for USB port, High for AC–DC adapter)
PROG2 – USB port input current limit selection when SEL = Low (Low = 100 mA, High = 500 mA)
PG – Power–Good Status Output (Open–Drain)
STAT2 – Charge Status Output 2 (Open–Drain)
STAT1/LBO – Charge Status Output 1 (Open–Drain). Low battery output indicator when VBAT > VIN
TE – Timer Enable; Enables Safety Timer when active Low
PROG3 – Termination set point for both AC–DC adapter and USB port. Iterm=1000V/Rprog3
PROG1 – Fast charge current regulation setting with SEL = High. Ireg=1000V/Rprog1
CE – Device Charge Enable; Enabled when CE = High

MOUNTING

LOGO

USB

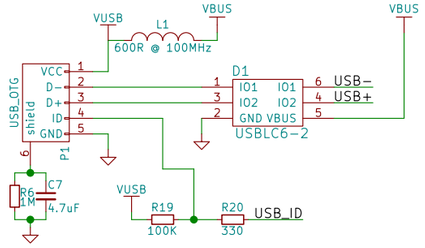

RFM95W

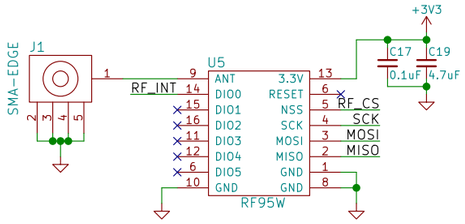

AUDIO

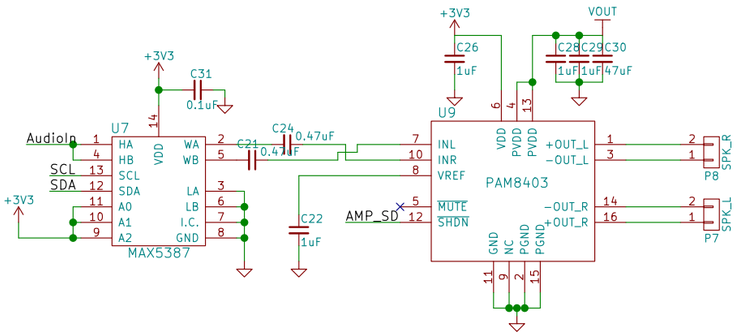

IMU

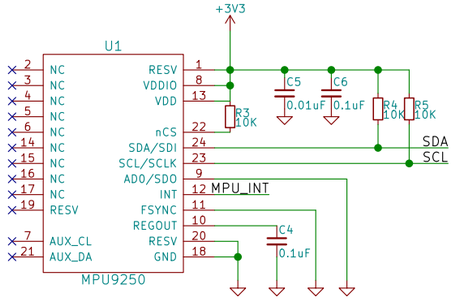

GPS

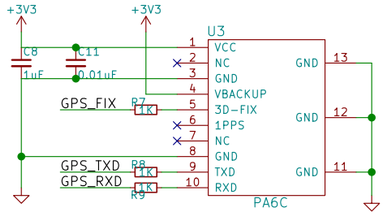

FLASH

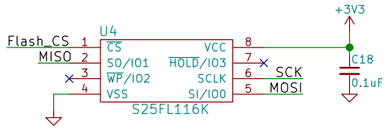

SWD

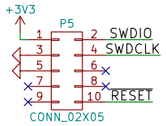

NOTES

Alex Muir

Sheet: /
File: MainCollar.sch

Title: OpenFence: Main Collar

Size: A3	Date: 28–04–2016	Rev: 0.1
KiCad E.D.A. eeschema 4.0.2–stable		Id: 1/1