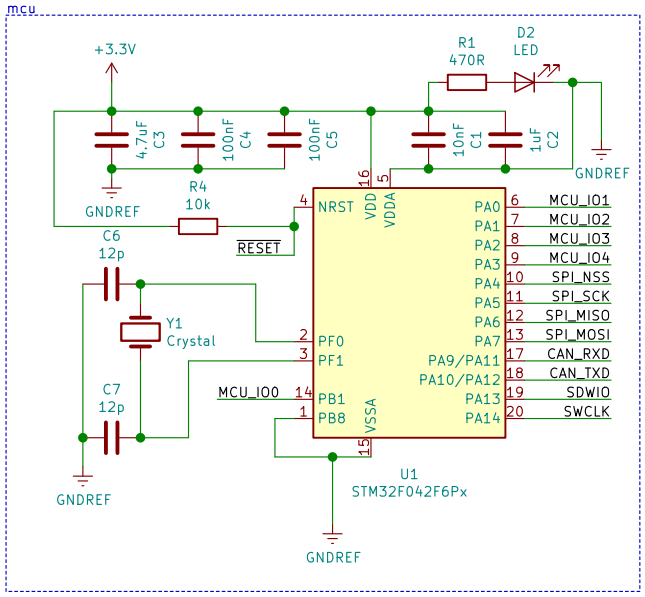

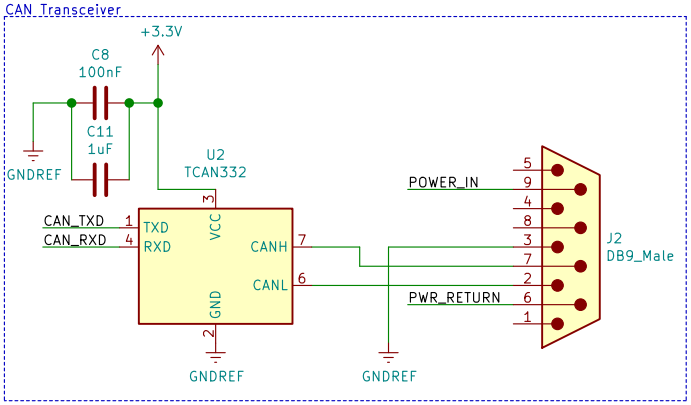

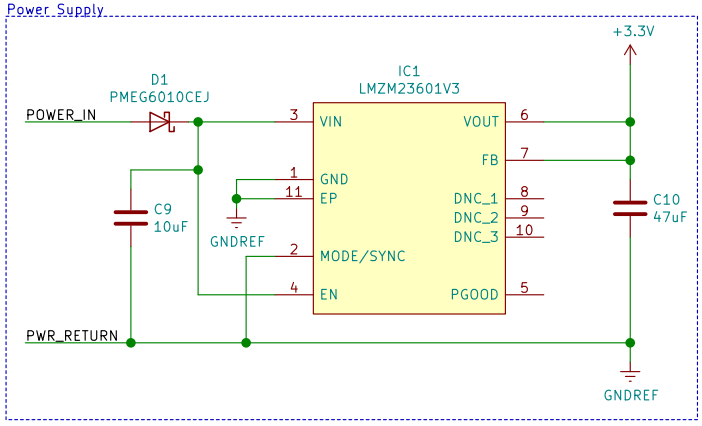

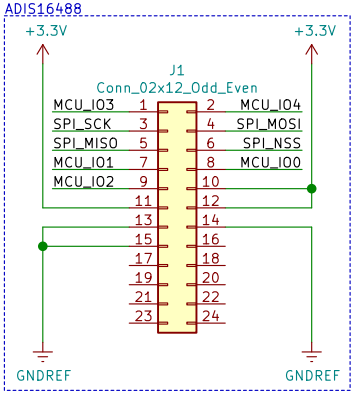

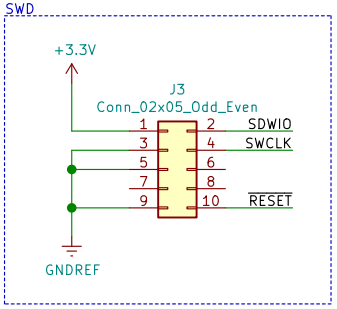

John Arild Lolland

Sheet: /
File: STM32CAN.sch

Title: CANBUS TEST WITH STM32

Size: A4	Date: 2019-06-10	**Rev: –**
KiCad E.D.A. kicad (5.1.2)-1		Id: 1/1