DIP Final Project

Chroma Contrast Enhancement

r13942143 何景盛 r13942132 許定楷

Motivation

Image Quality: Image quality significantly affects the performance of tasks like image segmentation, object detection, and feature extraction.

Issues: Real-world images often suffer from uneven lighting and low contrast, leading to blurred edges and loss of texture details, which compromise the reliability of subsequent processing.

Goal: Enhance foreground-background distinction and improve target region visibility using Chroma Contrast Enhancement.

Thought: We use of the CIECAM02 model for chroma contrast enhancement.

Proposed method(overall)

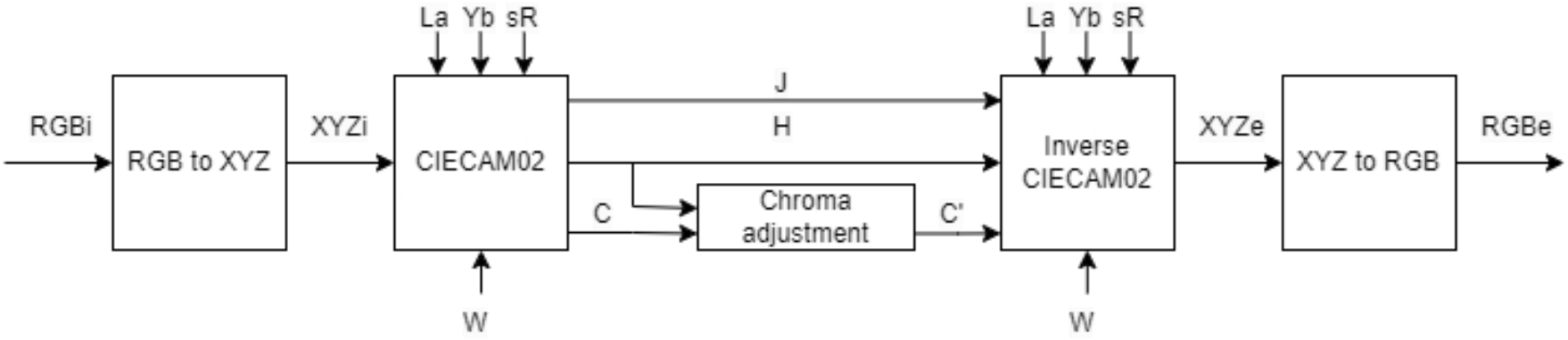

Proposed method(RGB to XYZ/XYZ to RGB)

RGB to XYZ: $\begin{bmatrix} X \\ Y \\ Z \end{bmatrix} = M \begin{bmatrix} R \\ G \\ B \end{bmatrix}$

XYZ to RGB: $\begin{bmatrix} R \\ G \\ B \end{bmatrix} = M^{-1} \begin{bmatrix} X \\ Y \\ Z \end{bmatrix}$

$$M_{sRGB} = \begin{bmatrix} 0.4124564 & 0.3575761 & 0.1804375 \\ 0.2126729 & 0.7151522 & 0.0721750 \\ 0.0193339 & 0.1191920 & 0.9503041 \end{bmatrix}$$

Proposed method(CIECAM02/Inverse CIECAM02)

- Using CIECAM02 model to convert XYZ to JCH
- Using inverse CIECAM02 model to convert JCH to XYZ

(Implementation detail in DIP_06C Preserving Color Appearance of LCD Images.pdf and DIP_06E Inverse CIECAM02.pdf)

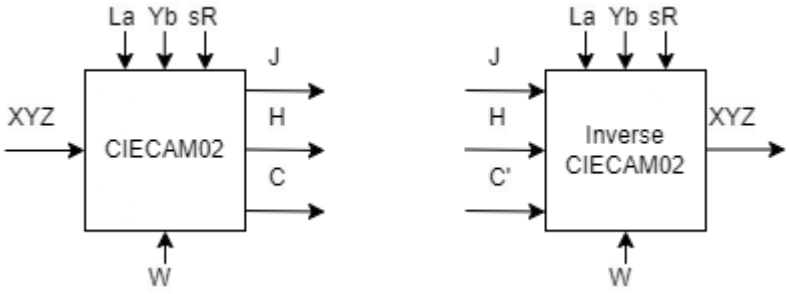

Proposed method(Contrast enhancement)

$$mask = \begin{cases} True, & 200° < H < 280° \\ False, & otherwise \end{cases}$$

$$C' = \begin{cases} (1-w)C_{CLAHE,mask} + wC_{mask}, & \left|C_{CLAHE,mask} - C_{mask}\right| \geq thr \\ C_{CLAHE,mask}, & \left|C_{CLAHE,mask} - C_{mask}\right| < thr \end{cases}$$

- w: Weight
- thr: Threshold
- C_{mask}: Masked original C
- $C_{CLAHE,mask}$: Masked CLAHE C
- C': Enhancement C

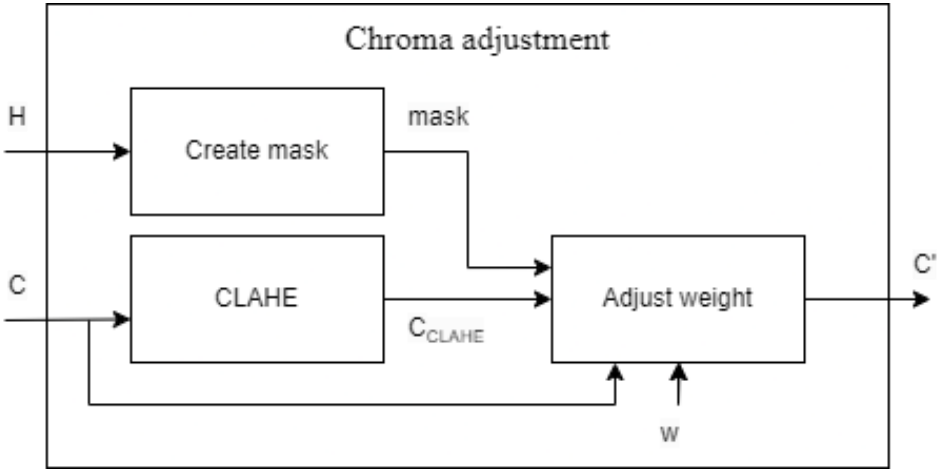

Proposed method(Contrast enhancement)

- Simple equaliztion: Histogram equaliztion
- CLAHE (Contrast Limited Adaptive Histogram Equalization)
- Adjust Weight: Allow all hue pass
- Proposed method: Limited hue range of blue

Original image

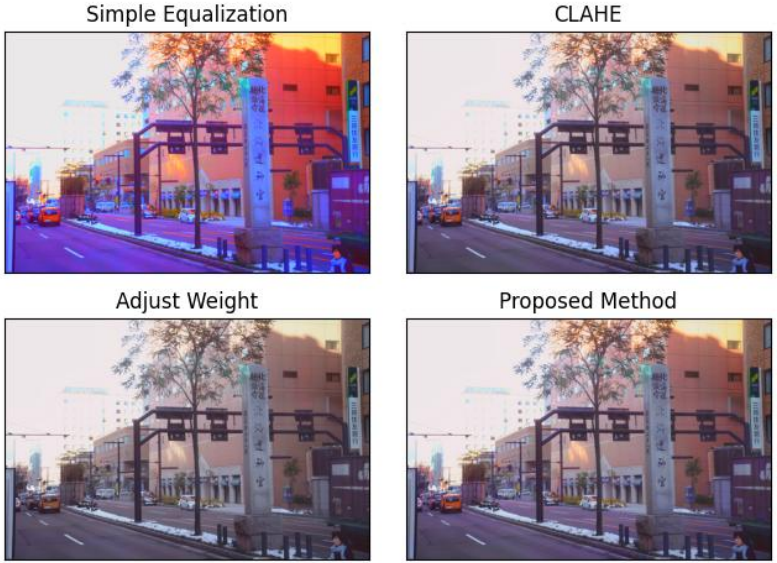

Experiment and Results

- We compared our results with reference [5].
- Result image compare.
- Evaluations were conducted using PSNR and SSIM.

- *Direct Method:*

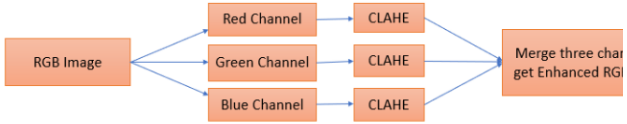

Indirect Method:

1. Using YCrCb color space

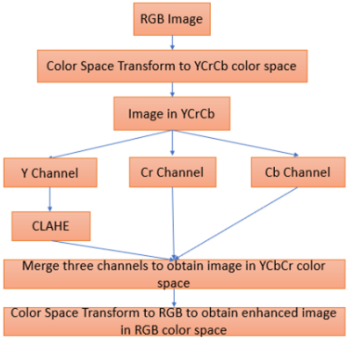

2. Using HSV color space

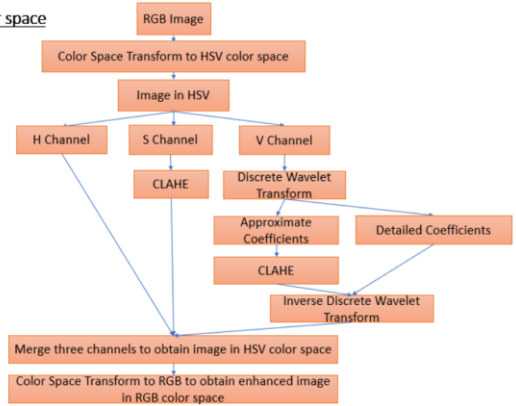

Experiment and Results

Original image

Proposed Method

Direct Method

Using YCbCr color space

Using HSV color space

Experiment and Results

Original image

Experiment and Results

Original image

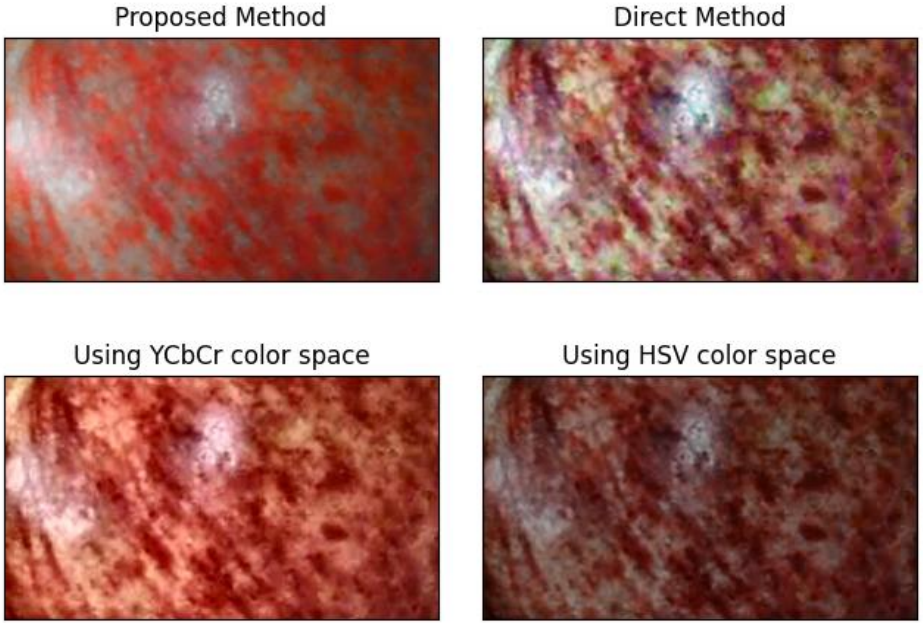

Experiment and Results

Table 1				
Method Metrics	Proposed	Direct	YCbCr	HSV
Average PSNR	75.8461899	66.9693218	67.39673034	68.14061355
Average SSIM	0.857057364	0.770307543	0.778708787	0.847334862

Conclusion

Advantage: Enhances chroma contrast effectively.

Limitation: Blue enhancement may introduce distortions, impacting image structure and naturalness.

Possible Cause/Future Work: Brightness (J) and Chroma (C) relationship.

Reference

1. K. -T. Shih and H. H. Chen, "Exploiting Perceptual Anchoring for Color Image Enhancement," in IEEE Transactions on Multimedia, vol. 18, no. 2, pp. 300-310, Feb. 2016, doi: 10.1109/TMM.2015.2503918.
2. Gao, X.W., & Loomes, M. (2016). A new approach to image enhancement for the visually impaired. Color Imaging: Displaying, Processing, Hardcopy, and Applications.
3. Gao, X., Taylor, S., Pang, W., Lu, X., & Braden, B. (2022, April). Early detection of oesophageal cancer through colour contrast enhancement for data augmentation. In Medical Imaging 2022: Computer-Aided Diagnosis (Vol. 12033, pp. 20-25). SPIE.
4. Lee, Sooyeon & Kwak, Youngshin & Kim, Youn & Park, Sehyeok & Kim, Jaehyun. (2012). Contrast-Preserved Chroma Enhancement Technique using YCbCr Color Space. Consumer Electronics, IEEE Transactions on. 58. 641-645. 10.1109/TCE.2012.6227471.
5. https://github.com/abhishek-kumar41/contrast-enhancement-color-images/tree/main
6. Wang, Zhou, et al. "Image quality assessment: from error visibility to structural similarity." IEEE transactions on image processing 13.4 (2004): 600-612.
7. DIP_06C Preserving Color Appearance of LCD Images.pdf
8. DIP_06E Inverse CIECAM02.pdf