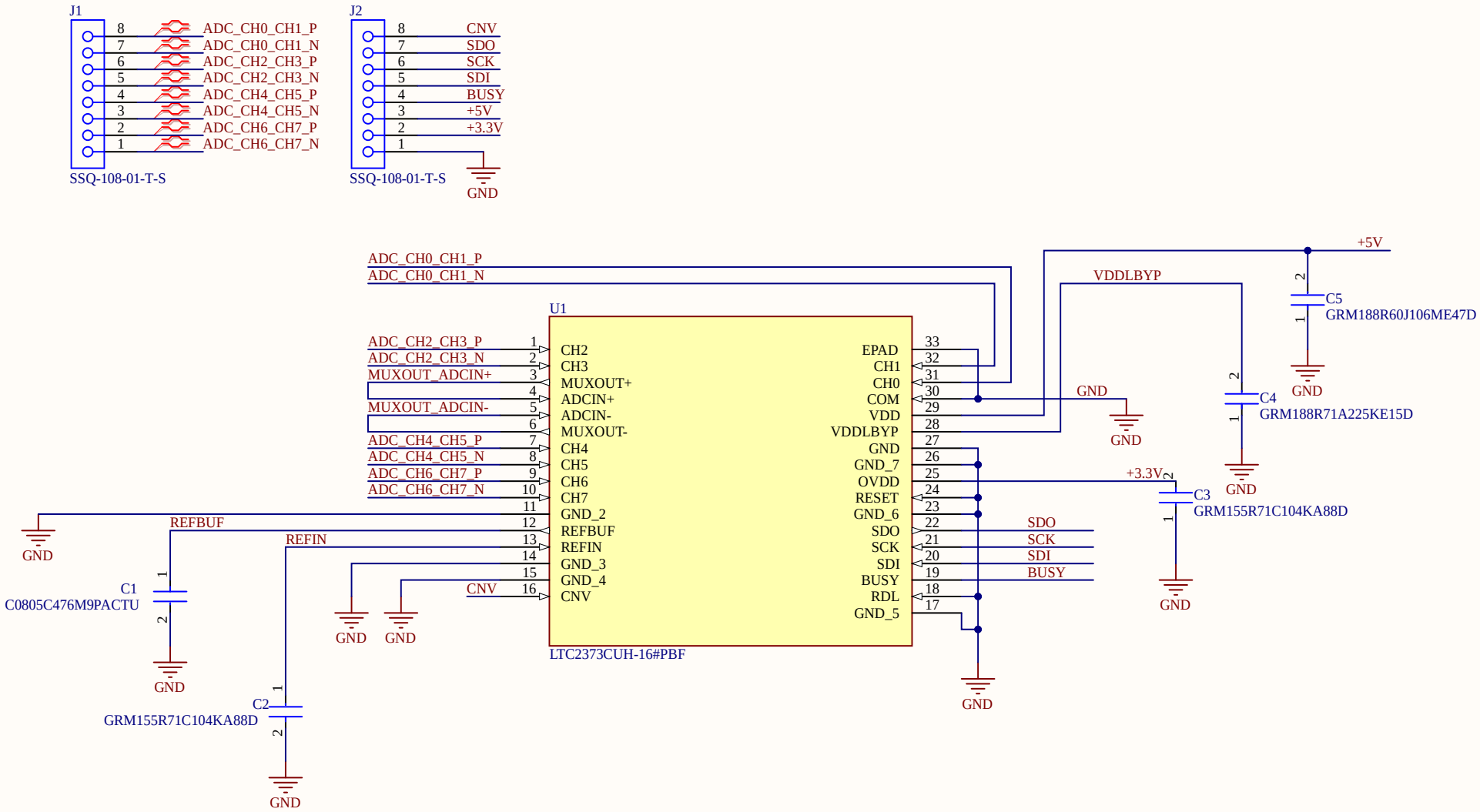

Title		
Size A	Number	Revision
Date: 11/07/2022	Sheet of	
File: C:\Users\..\LTC2373_Schematic.SchDoc	Drawn By:	

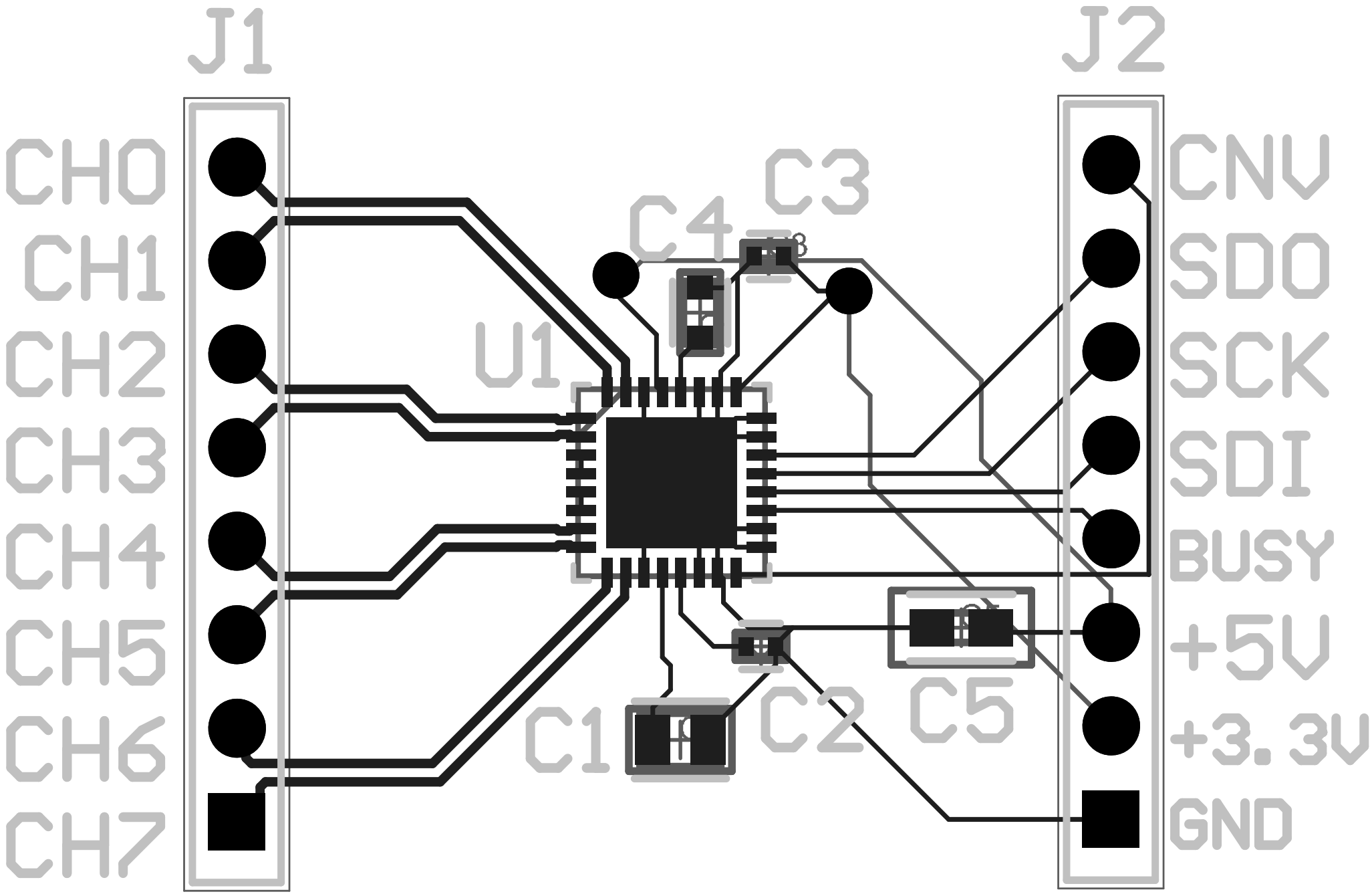
J1
J2
CH0
CH1
CH2
CH3
CH4
CH5
CH6
CH7
CNV
SDO
SCK
SDI
BUSY
+5V
+3.3V
GND
U1
C1
C2
C3
C4
C5

Board Stack Report