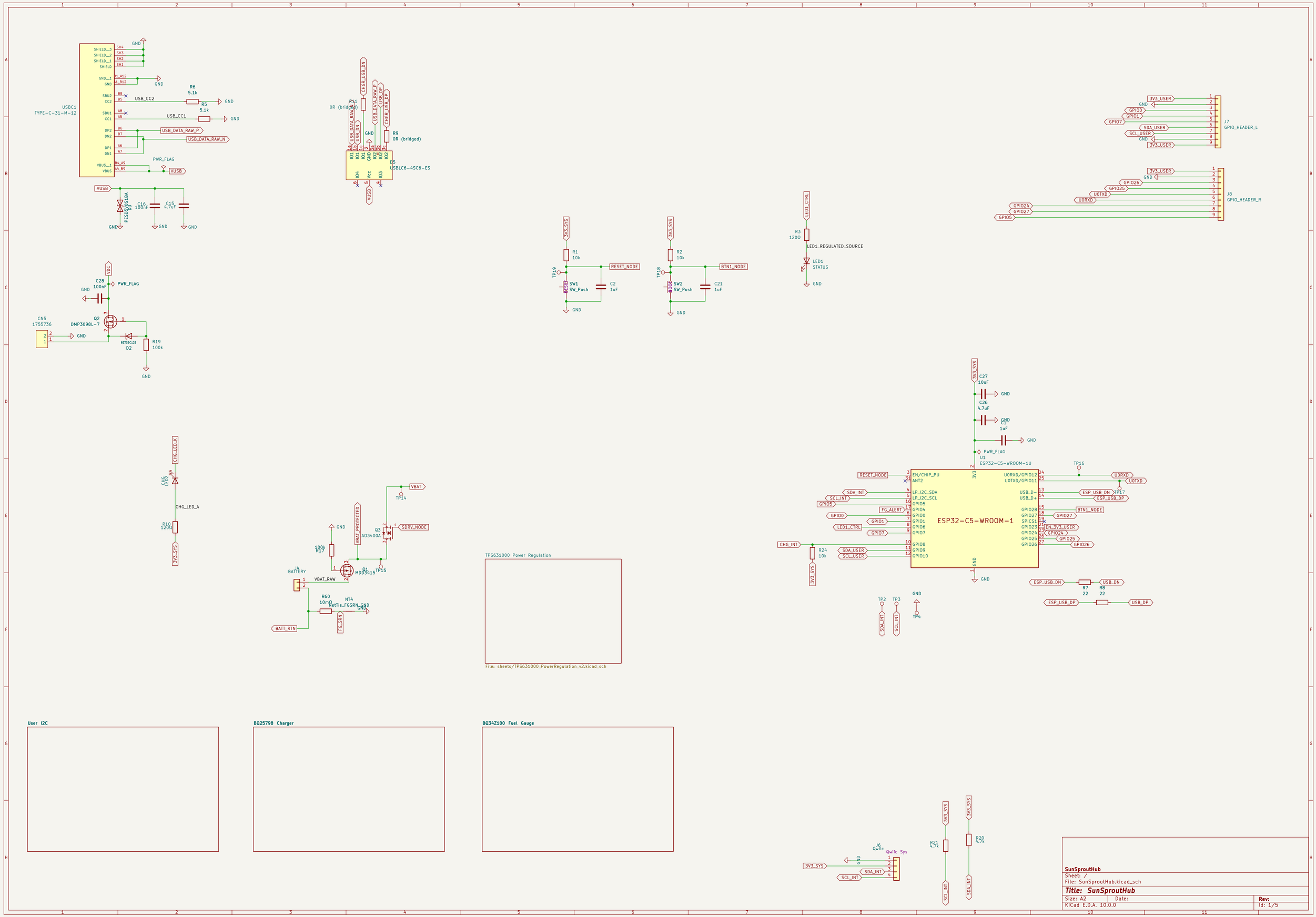
USBC1
TYPE-C-31-M-12
R6
5.1k
R5
5.1k
USB_CC2
USB_CC1
USB_DATA_RAW_P
USB_DATA_RAW_N
PWR_FLAG
VUSB
D3
PESD5V0S1BA
C16
100nF
C15
4.7uF
R4
OR (bridged)
R9
OR (bridged)
D5
USBLC6-4SC6-ES
CHGR_USB_DN
CHGR_USB_DP
USB_DATA_RAW_P
USB_DATA_RAW_N
J7
GPIO_HEADER_L
J8
GPIO_HEADER_R
3V3_USER
GPIO0
GPIO1
GPIO7
SDA_USER
SCL_USER
U0TXD
U0RXD
GPIO26
GPIO25
GPIO24
GPIO27
GPIO5
R1
10k
R2
10k
SW1
SW_Push
SW2
SW_Push
C2
1uF
C21
1uF
RESET_NODE
BTN1_NODE
R3
120Ω
LED1_REGULATED_SOURCE
LED1
STATUS
C28
100nF
CN5
1755736
Q2
DMP3098L-7
D2
R19
100k
C27
10uF
C26
4.7uF
C1
1uF
U1
ESP32-C5-WROOM-1U
ESP32-C5-WROOM-1
EN/CHIP_PU
ANT2
LP_I2C_SDA
LP_I2C_SCL
GPIO5
GPIO4
GPIO0
GPIO1
GPIO6
GPIO7
GPIO8
GPIO9
GPIO10
U0RXD/GPIO12
U0TXD/GPIO11
USB_D-
USB_D+
GPIO28
GPIO27
SPICS1
GPIO23
GPIO24
GPIO25
GPIO26
3V3
GND
SDA_INT
SCL_INT
FG_ALERT
LED1_CTRL
CHG_INT
R24
10k
ESP_USB_DN
ESP_USB_DP
R7
22
R8
22
USB_DN
USB_DP
TP16
TP17
TP2
TP3
TP4
CHG LED2
CHG_LED_A
R10
120Ω
CHG_LED_K
VBAT
TP14
SDRV_NODE
Q3
AO3400A
VBAT_PROTECTED
100k
R17
Q4
MDD3415
TP15
J1
BATTERY
VBAT_RAW
R60
10mΩ
NT4
NetTie_FGSRN_GND
BATT_RTN
FG_SRN
TPS631000 Power Regulation
File: sheets/TPS631000_PowerRegulation_v2.kicad_sch
User I2C
BQ25798 Charger
BQ34Z100 Fuel Gauge
J6
Qwiic
Qwiic Sys
R21
4.7k
R20
4.7k
SunSproutHub
Sheet: /
File: SunSproutHub.kicad_sch
Title: SunSproutHub
Size: A2
Date:
Rev:
KiCad E.D.A. 10.0.0
Id: 1/5

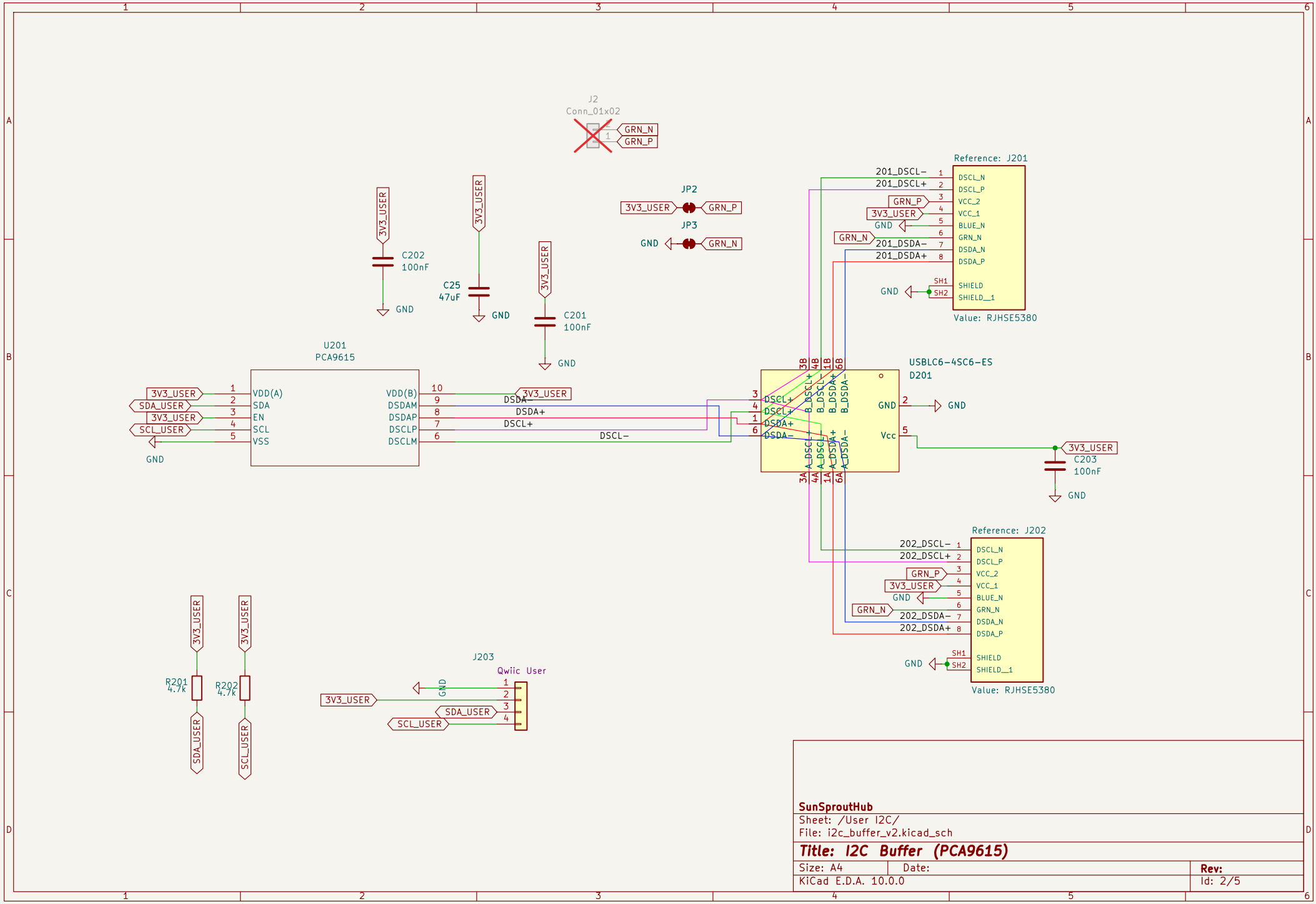

SunSproutHub

Sheet: /User I2C/

File: i2c_buffer_v2.kicad_sch

Title: I2C Buffer (PCA9615)

Size: A4	Date:	**Rev:**
KiCad E.D.A. 10.0.0		Id: 2/5

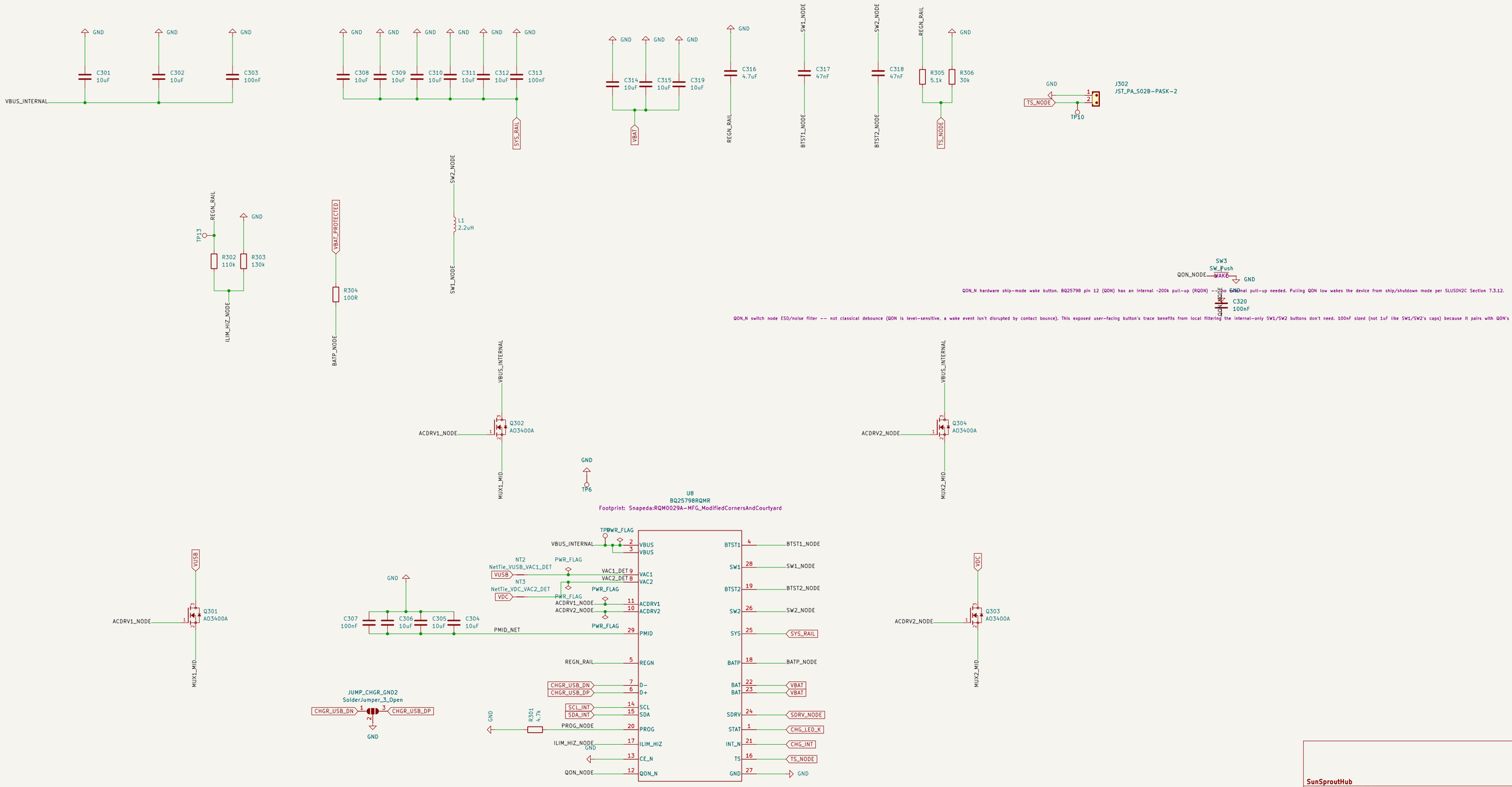

SunSproutHub
Sheet: /BQ25798 Charger/
File: bq25798_charger_v2.kicad_sch

Title: BQ25798 Charger

Size: A2	Date:	**Rev:**
KiCad E.D.A. 10.0.0		Id: 3/5

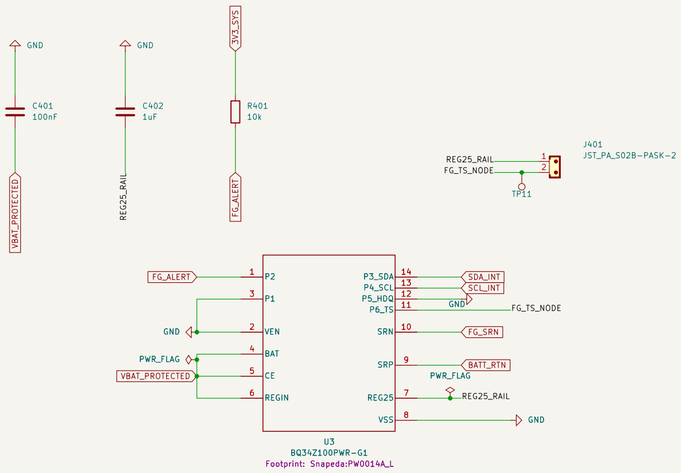

Replaces BQ27427YZFR: BQ27427/BQ27426 have zero LiFePO4 chemistry-profile support (confirmed against datasheet -- only 4.2/4.35/4.4V Li-Ion profiles exist). BQ34Z100 explicitly supports Li-Ion and LiFePO4. Architecture changed from BQ27427's high-side integrated 7mOhm shunt to a low-side external sense resistor (R60 on the main sheet, in series between the true battery- terminal and system GND) -- SRP/SRN Kelvin-sense across R60.

SunSproutHub

Sheet: /BQ34Z100 Fuel Gauge/

File: bq34z100_fuel_gauge_v2.kicad_sch

Title: BQ34Z100 Fuel Gauge

Size: A2	Date:	**Rev:**
KiCad E.D.A. 10.0.0		Id: 4/5

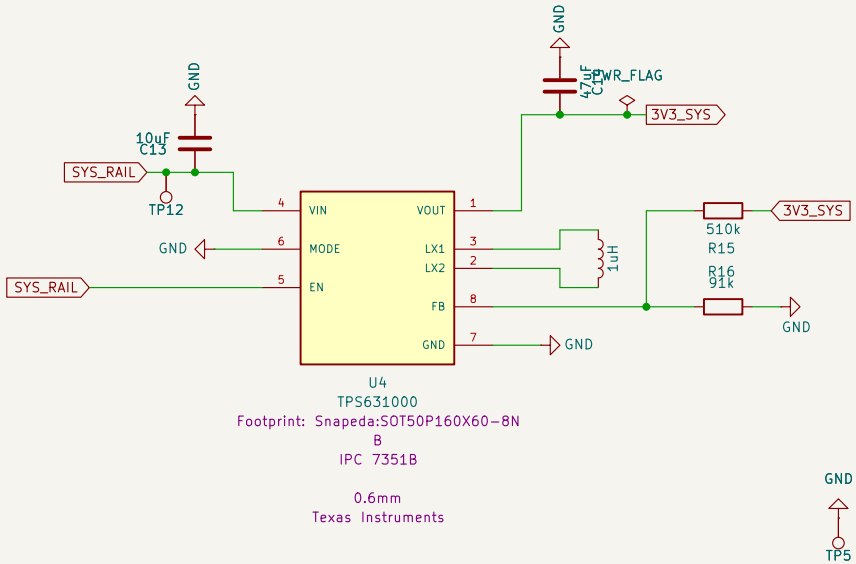

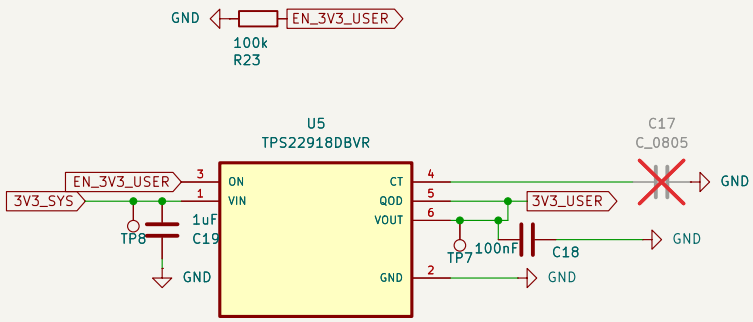

Sheet: /TPS631000 Power Regulation/
File: TPS631000_PowerRegulation_v2.kicad_sch

Title:

Size: A4	Date:	**Rev:**
KiCad E.D.A. 10.0.0		Id: 5/5