Breadboard

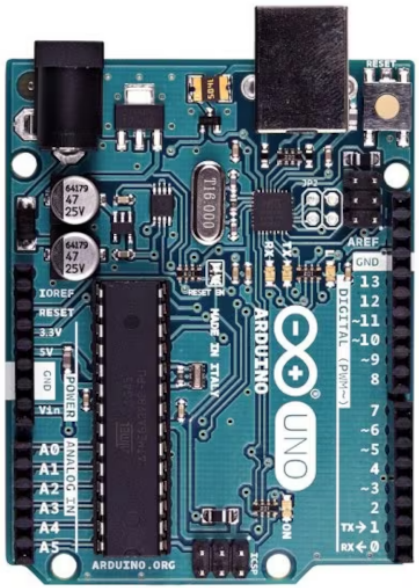
ARDUINO.ORG
ARDUINO
UNO
IOREF
RESET
3.3V
5V
GND
Vin
POWER
ANALOG IN
A0
A1
A2
A3
A4
A5
DIGITAL (PWM~)
13
12
~11
~10
~9
8
7
~6
~5
4
~3
2
TX→1
RX←0
AREF
GND
MADE IN ITALY
ICSP

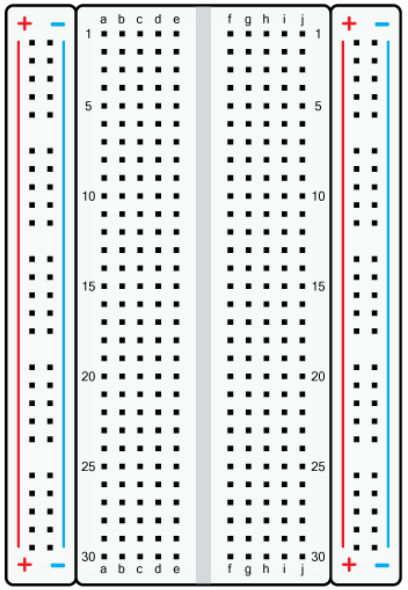
a b c d e
f g h i j
1
5
10
15
20
25
30

Breadboard

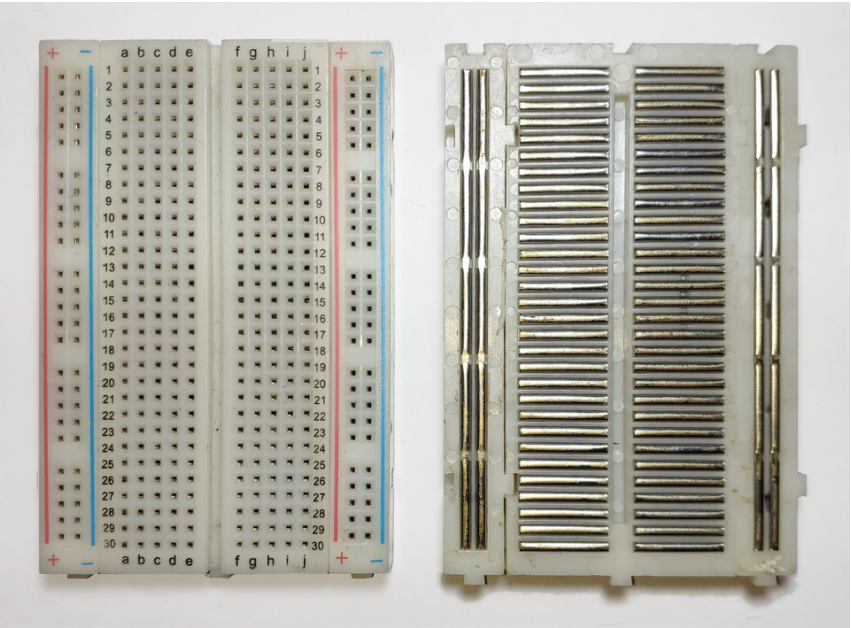

Breadboard

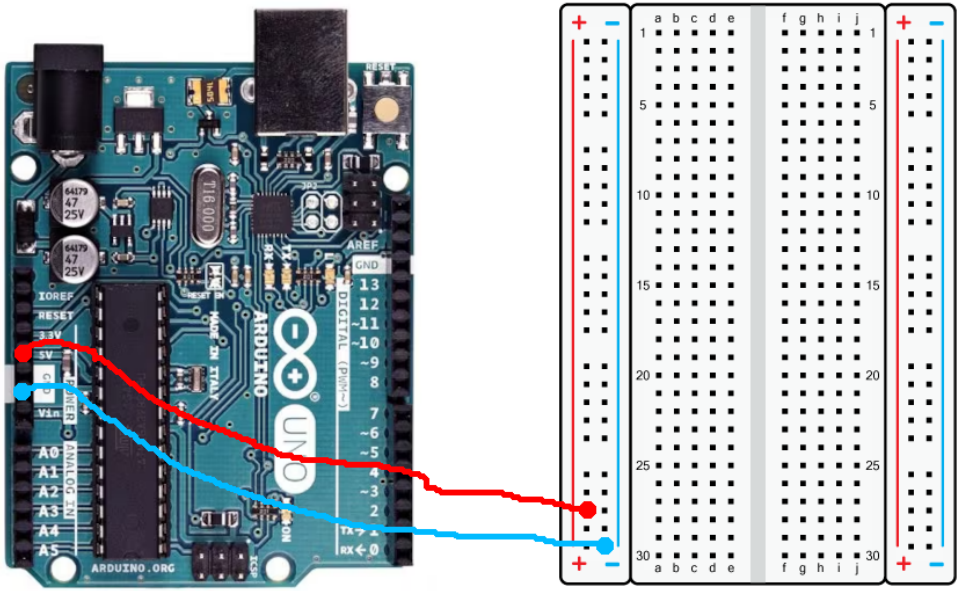

Power strip now powered

Breadboard

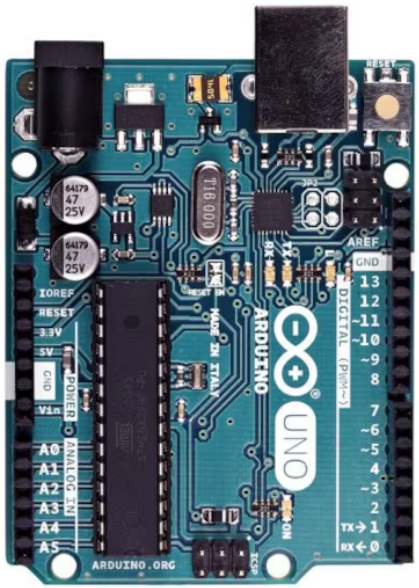

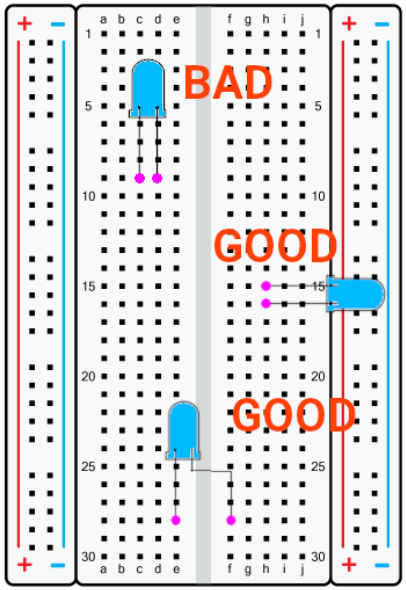

Keep leads on unconnected paths

Circuit Diagram

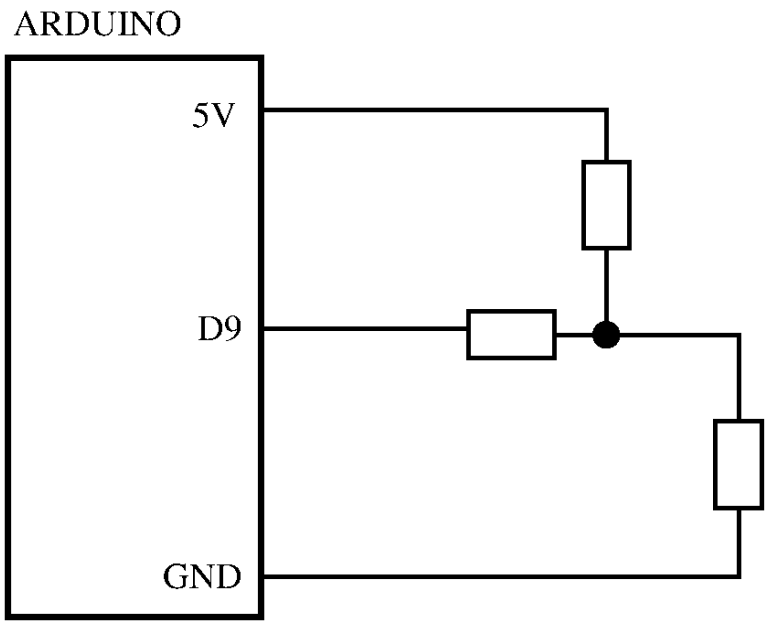

Circuit Diagram

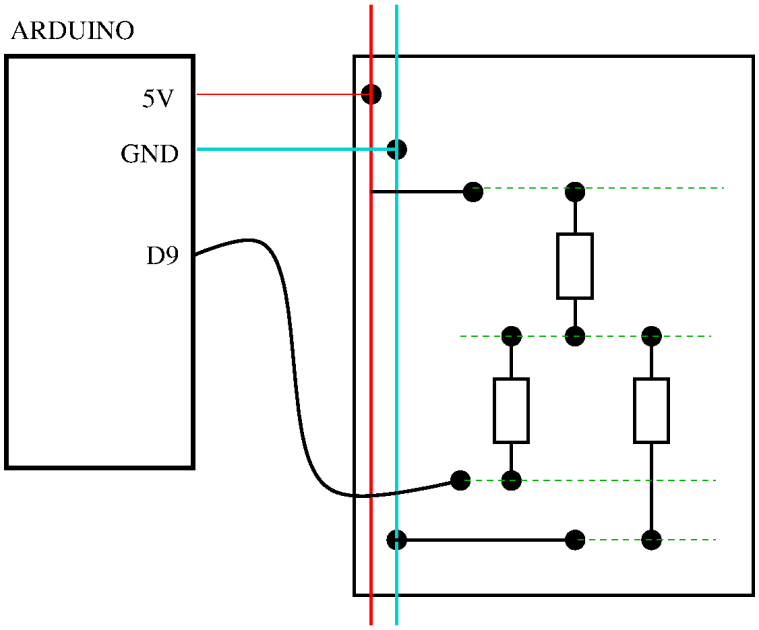

RGB Colour Model

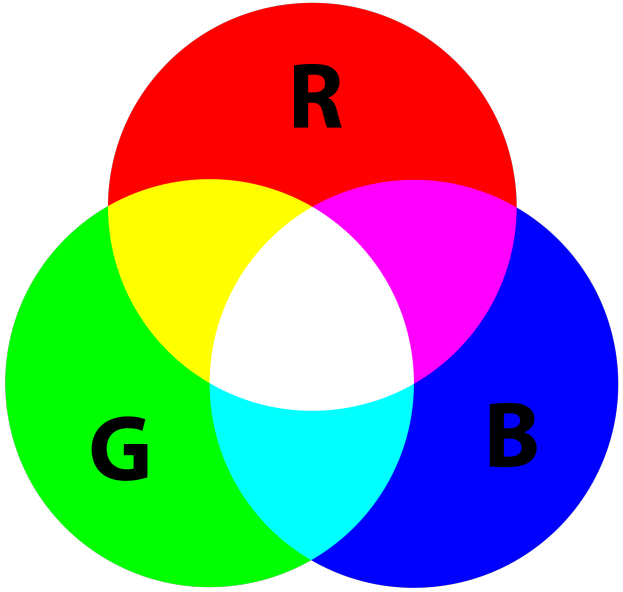

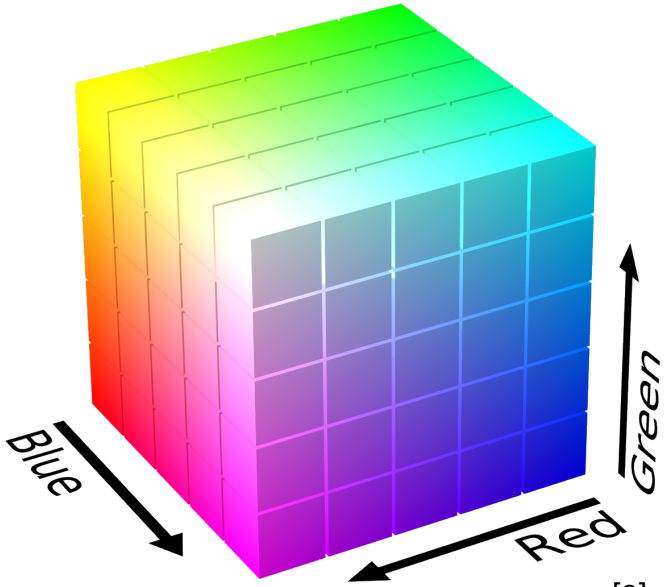

[8]

RGB LEDs

- Comprised of 3 LEDs (Red,Green,Blue)
- two types: Common Anode, Common Cathode

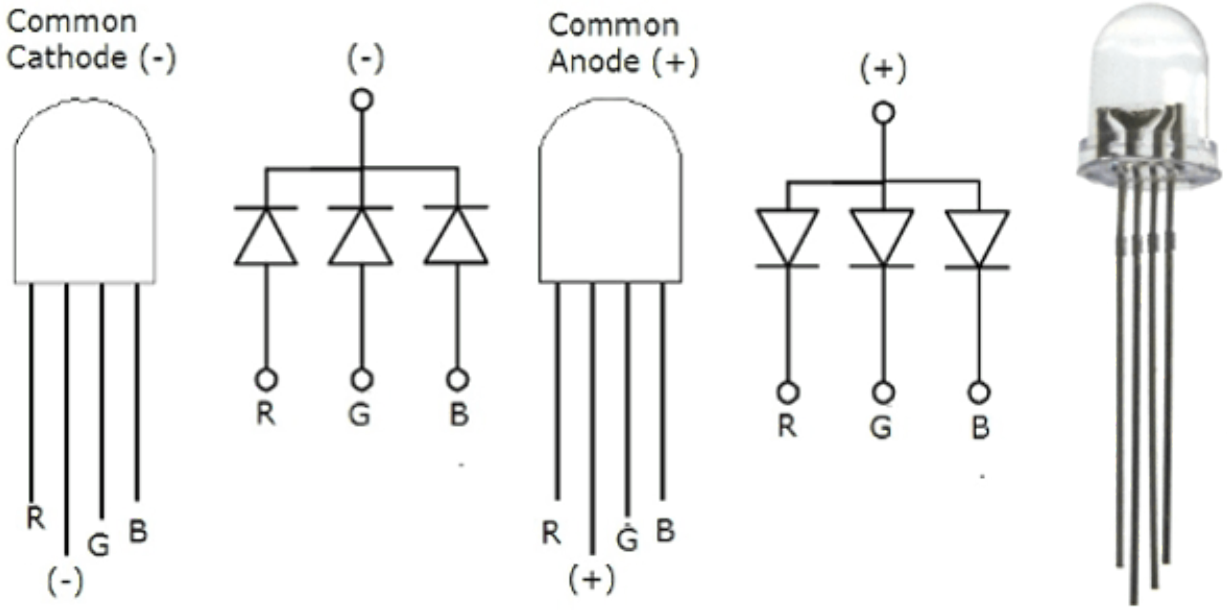

RGB Colour Model

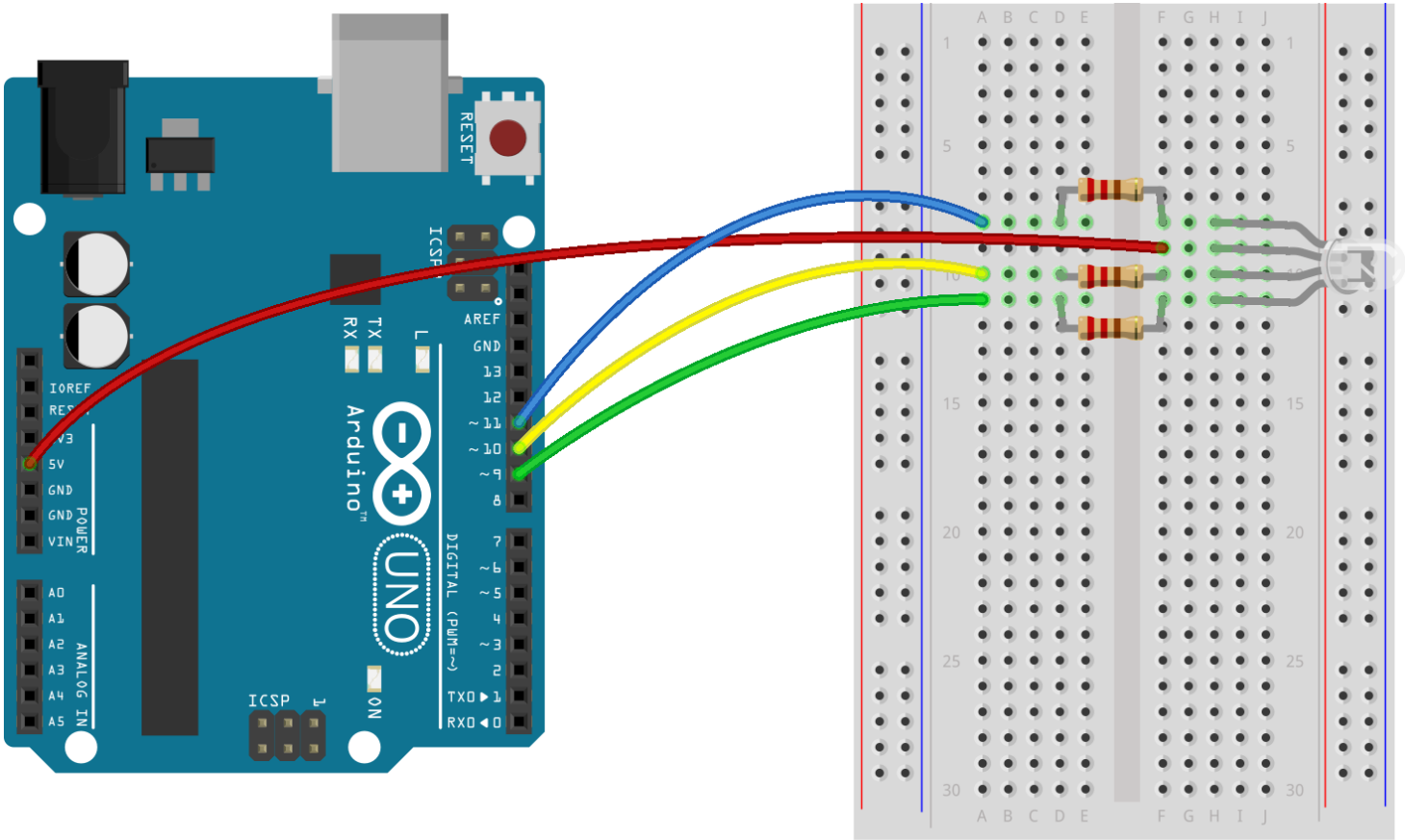

RGB Colour Model

Task: Create a function which inputs: colour and RGB pins and then displays that colour on the LED

0) Determine whether Cathode or Anode

Note: enclose the LED to see the combined colour

RGB Colour Model

Code:

rgbLED | Arduino 1.8.2

File Edit Sketch Tools Help

rgbLED

```
void setup() {
  pinMode( 9,OUTPUT);
  pinMode(10,OUTPUT);
  pinMode(11,OUTPUT);
}

void loop() {
  analogWrite( 9,255);
  analogWrite(10,  0);
  analogWrite(11,  0);
  delay(1000);

  analogWrite( 9,  0);
  analogWrite(10,  0);
  analogWrite(11,255);
  delay(1000);
}
```

Done Saving.

14 Arduino/Genuino Uno on /dev/ttyACM0

RGB Colour Model

Task: Create a function which inputs: colour and RGB pins and then displays that colour on the LED

1) Match wire colours with pins (RGB)

create a program to show a specific colour
check if pin matches wire colour

Note: enclose the LED to see the combined colour

RGB Colour Model

Task: Create a function which inputs: colour and RGB pins and then displays that colour on the LED

2) Use Names for pins instead of numbers

```
#define RED 9
pinMode(RED,OUTPUT)
```

Note: enclose the LED to see the combined colour

RGB Colour Model

Task: Create a function which inputs: colour and RGB pins and then displays that colour on the LED

3) Determine Colours (ROYGBIV)

RED = (255,0,0)
GREEN = (0,255,0)

Note: enclose the LED to see the combined colour

RGB Colour Model

Task: Create a function which inputs: colour and RGB pins and then displays that colour on the LED

4) Create a program which asks a user to enter a colour and it is displayed on the LED

Note: enclose the LED to see the combined colour