Designing the Physical Layout of an Operational Amplifier (Op-Amp) in 65nm CMOS Technology

Ioannis Ziangas, *University of the Peloponnese*(1)

Supervisor: Georgios Souliotis, *University of the Peloponnese*(2)

I. INTRODUCTION

The course **"Design of Analog Microelectronic Components and Circuits" (ECE_ELE930)** introduced us to the practical side of analog circuit design using Cadence Virtuoso. To help us understand the challenges and unwritten rules of analog design, our instructor guided us through the process of designing an operational amplifier (Op-Amp) in 65-nm CMOS technology.

This report focuses on how we designed the Op-Amp, emphasizing the physical layout rather than the theoretical operation of the circuit.

A. Structure of the Report

The report is organized as follows. Sec. II gives a brief overview of the op-amp operation. Sec. III describes the design of the two-stage CMOS op-amp and its implementation in Cadence Virtuoso. Sec. IV focuses on the physical layout, highlighting key analog layout techniques. Finally, Sec. V presents pre- and post-layout simulation results and discusses the impact of layout-induced parasitics on the initial schematic performance.

II. OPERATION OF THE OP-AMP

The Op-Amp is a fundamental building block used in a wide range of applications such as voltage amplifiers, filters, buffers, integrators, and comparators. It is commonly found whenever a circuit needs to amplify, shape or condition small signals.

An Op-Amp has two inputs called *inverting input* (-) and *non-inverting input* (+). The output of the Op-Amp swings between positive or negative depending on which input has the higher voltage. When operating in open-loop mode, the Op-Amp exhibits extremely high gain, making it unsuitable for most practical applications. To achieve a stable and controlled response, feedback networks composed of resistors and capacitors are implemented to define the desired closed-loop gain and frequency behavior, as shown in Fig. 1.

(1)The author is with the School of Electrical and Computer Engineering, University of the Peloponnese, Patras, Greece (e-mail: ece20229@go.uop.gr). This report was submitted for the course **Design of Analog Microelectronic Components and Circuits (ECE_ELE930)** during the 2025 winter semester.

(2)The supervisor, Associate Professor at the School of Electrical and Computer Engineering, University of the Peloponnese, Greece (email: gsoul@go.uop.gr), is serving as the instructor for the course **Design of Analog Microelectronic Components and Circuits (ECE_ELE930)** during the 2025 winter semester.

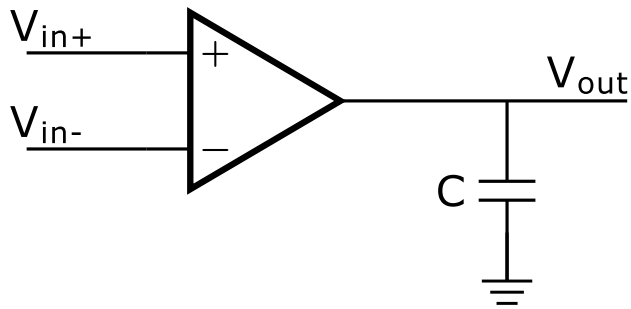

Fig. 1: Block diagram of a typical closed loop Op-Amp

III. CIRCUIT DIAGRAM OF THE OP-AMP

A. Circuit Overview

Building an Op-Amp is well documented, so for this learning exercise, we will use a classic two-stage CMOS Op-Amp as seen in Fig. 2. The circuit diagram features a differential input stage for high gain and common-mode rejection followed by a common-source second stage for extra amplification. A compensation network consisted of a resistor (R) in series with a capacitor (C) connects the high-gain second-stage output (M_8 drain) to the low-impedance first-stage output (M_7 drain). This Miller effect shifts the dominant pole to much lower frequencies while pushing the first-stage pole higher, improving phase margin for stability. The circuit runs off V_{DD} and V_{SS} (ground) supplies, with V_{in_+} and V_{in_-} driving the input differential pair.

B. First-Stage Input Differential Pair

The differential input pair M_4 and M_5 forms the first gain stage, converting differential input voltages (V_{in_+}, V_{in_-}) into a single-ended output current. When a differential signal is applied, the tail current splits unequally between M_4 and M_5. An increase in V_{in_+} steals current from M_5 and pushes more through M_4, while the opposite occurs for V_{in_-}. This differential current flows into the active load ($M_6 - M_7$), which converts it to a single-ended voltage at the M_7 drain with high gain. Common-mode signals produce equal currents in both branches that cancel out. This precise splitting depends on the stable tail current, which is provided by the biasing circuit using the current mirror formed by M_1, M_2 and M_3.

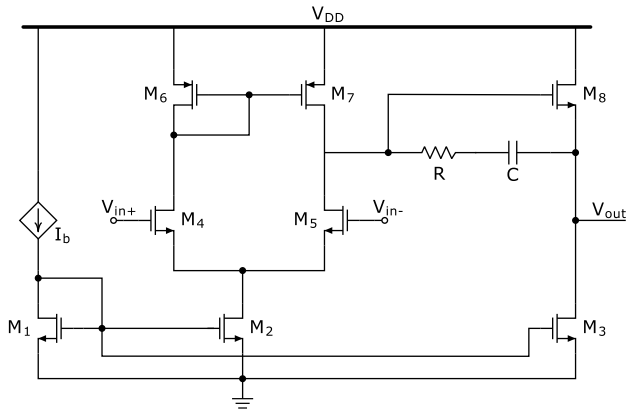

Fig. 2: Typical circuit schematic of a two-stage CMOS Op-Amp

C. Bias and Current Mirror

The biasing circuit establishes stable DC operating points for all transistors using a reference current (I_b). M_1 senses this current to create a gate-source reference voltage, which diode-connected M_2 copies exactly to establish identical bias conditions. M_3 then mirrors this current to the common source of the differential pair $M_4 - M_5$, providing a stable current that splits equally. This current mirror ensures consistent transconductance (g_m) across process, voltage, and temperature variations while enabling low-power operation and high common-mode rejection through the high-impedance tail.

D. Second-Stage and Compensation

The single-ended voltage from the first stage drives the gate of M_8, which forms the second gain stage as a common-source NMOS amplifier. M_8 is loaded by a current source biased by M_3 from the current mirror, providing substantial additional voltage gain. The compensation network of resistor R and capacitor C links M_8's high-gain drain to M_7's low-impedance drain. Through this Miller effect, this creates pole-shifting by shifting the dominant pole much lower while moving the first-stage pole higher, ensuring stability. R specifically cancels a right-half-plane zero that would otherwise degrade phase margin.

E. Output and Performance

The output voltage (V_{out}) appears at the drain of M_8. This node can swing close to the power supply rails, making the amplifier well-suited for driving capacitive loads as seen in Fig. 1. The slew rate depends on how quickly the full tail current from the first stage can charge the compensation capacitor C. The active load formed by M_6 and M_7 provides much higher gain than simple resistors would. This two-stage topology trades some bandwidth for very high DC gain, making it ideal for low-power CMOS processes in integrated circuits.

F. Cadence Schematics

Having established the operation of the circuit, we now implement it in Cadence Virtuoso using TSMC's 65-nm process kit (PDK). Fig. 3 shows the resulting schematic, where the transistors are the PDK *nch* and *pch* devices with dimensions listed in Tab. (I). The only difference from the circuit diagram in Fig. 2 is an additional NMOS transistor placed next to M_3 and short-circuited to provide symmetry, which will be discussed in more detail in Section IV. Furthermore, the used resistor is the PDK *rppolywo* device with total resistance $R = 8.56272$ kΩ, and the capacitor is the PDK *mimcap* device with total capacitance $C = 347.721$ fF. Fig. 4 shows the test bench used to evaluate the Op-Amp, closely following the block diagram in Fig. 1, with a supply voltage $V_{DD} = 1$ V and a differential AC input of $V_{in} = \pm 500$ mV, at $f_{in} = 1$ kHz and amplitude $A_{in} = 1$ V. The output capacitor is also a PDK *mimcap* device with total capacitance $C_o = 2$ pF. Both the differential AC input and the output capacitor are biased with a DC source of $V_{DC} = 500$ mV, which sets the DC operating point at C_o and keeps the AC input as a small variation around this level to avoid operating issues.

Transistor	L [nm]	W [μm]	W/L [μm]	Figures	Multiply
M0	120	2	4	2	8
M1	120	1.3	2.6	2	1
M2	120	2	4	2	8
M3	200	2	4	2	1
M4	200	2	4	2	10
M5	120	1.3	2.6	2	1
M6	200	2	4	2	14
M7	200	2	4	2	5
M8	120	13	7.8	6	1

TABLE I: Transistor Parameters

IV. Physical Layout

Once the schematic is completed, the next step is to implement it as a physical layout. The layout is built from multiple layers defined by the process technology, whose exact number and function depend on the node, although the basic structure is similar. At the bottom lies the silicon substrate, with wells and diffusion regions where the MOSFET transistors are formed. Above the devices are several metal interconnect layers that connect with vias vertically the circuit components between these layers. Lower metal layers are thinner and used mainly for local routing, while upper layers are wider and thicker so they can carry larger currents and span longer distances, as illustrated in Fig. 5. Because higher layers and long interconnects introduce more parasitic resistance and capacitance, signals are usually routed on the lower metals, with the top layers reserved for global power, clocks, and long critical nets. For better readability and symmetry, odd numbered metal layers (e.g. M1, M3, M5) are used for vertical routing, while even numbered metal layers (e.g. M2, M4, M6) are used for horizontal routing.

A. Layout Symmetry

Many circuits in analog VLSI design require matched devices, meaning that certain devices should behave as similarly as possible in the circuit, such as the two transistors of a differential pair or the devices in a current mirror. Perfect matching is impossible at modern feature sizes, because parasitics and process variations always introduce some mismatch

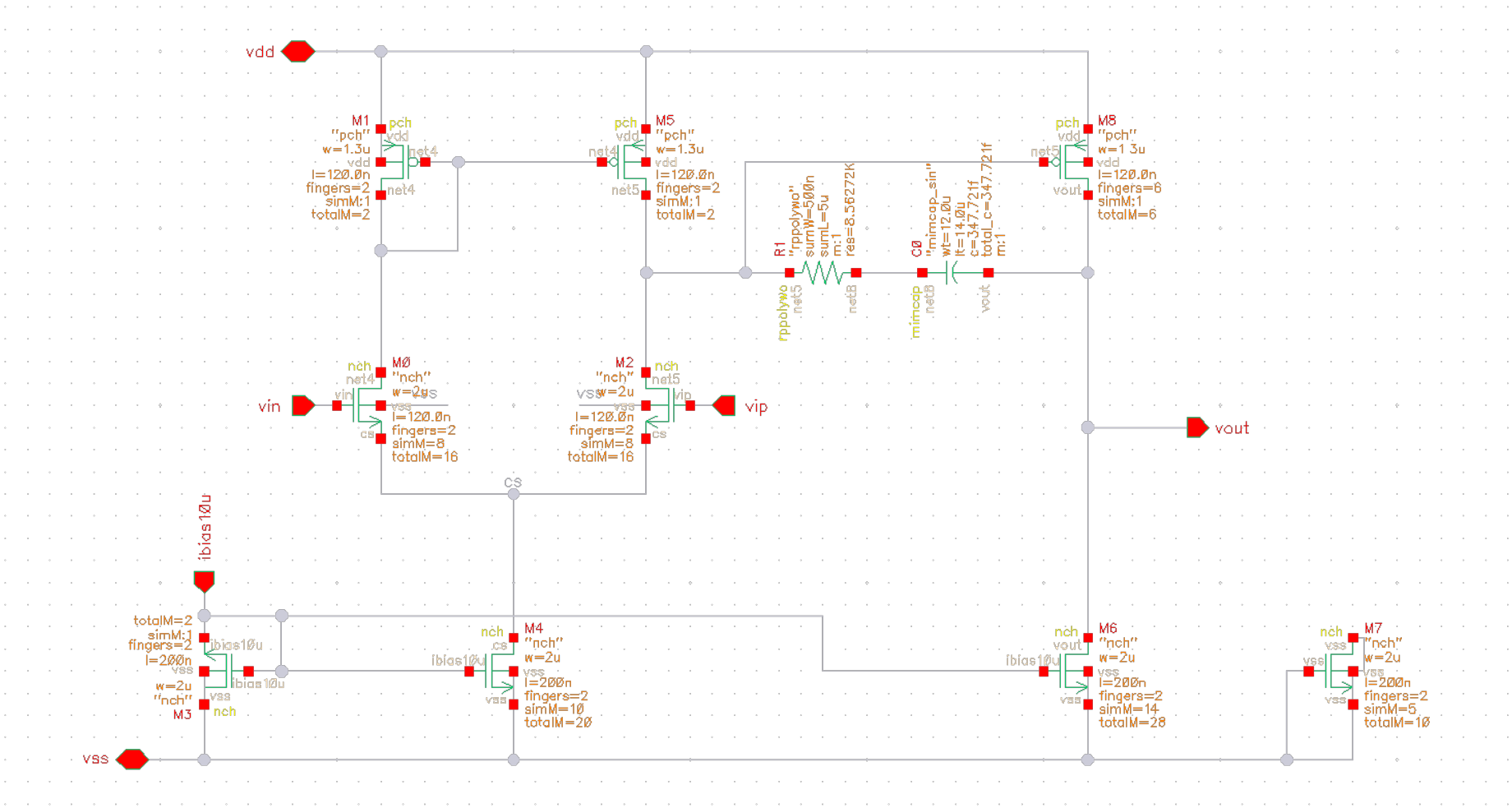

Fig. 3: Cadence schematic of a two-stage Op-Amp

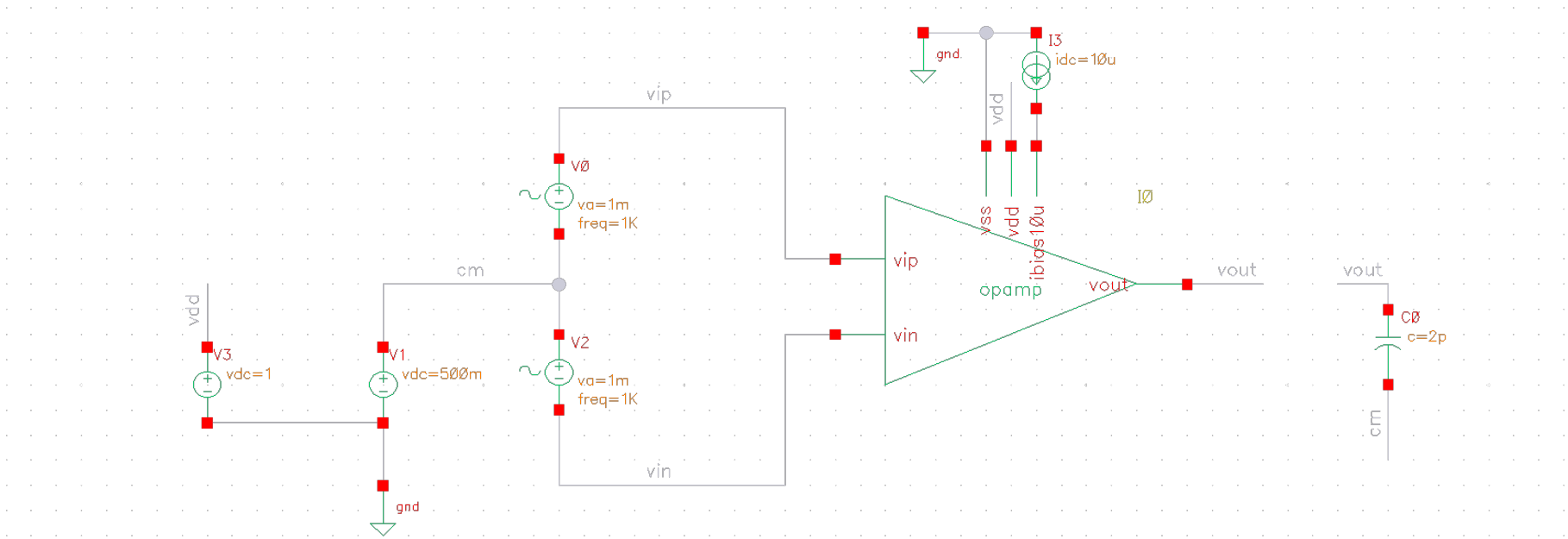

Fig. 4: Cadence schematic of the test-bench used to evaluate the Op-Amp

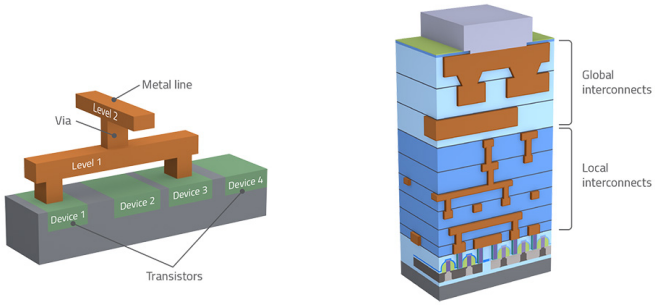

Fig. 5: Layer stack in a modern CMOS VLSI process, illustrating the silicon substrate, wells, devices, and multiple metal interconnect levels. *(Picture Source: lamresearch.com)*

in these very sensitive circuits. To minimize these effects, layout designers rely on symmetry, placing matched transistors as geometric mirror images of each other and routing them in a visually balanced way, as shown in Fig. 6. When this is done carefully, both devices "see" almost the same environment, with the same orientation, similar distance to well edges, contacts, and guard rings, and nearly identical parasitic resistances and capacitances in the interconnect. Since many physical effects in silicon (lithography errors, stress, temperature gradients, well-proximity effects, and so on) vary slowly with position, symmetric placement causes these variations to affect both sides in almost the same way, keeping their electrical characteristics closely matched. For the same reasons, symmetry is also applied to vias when connecting different metal layers. Using the same number and arrangement of vias on each side preserves matching, while placing multiple vias in parallel increases current-carrying capability and improves reliability by reducing resistance and current density in each individual via.

B. Guard Ring

Guard rings are diffusion regions that form a closed loop around sensitive devices or entire analog blocks and are tied to a fixed potential, typically V_{SS} for NMOS regions or V_{DD} for PMOS regions. Their main role is to "catch" substrate and well noise by providing many closely spaced contacts, giving unwanted currents a low-impedance path into the supply rails instead of letting them spread through the silicon and modulate nearby transistors. This improves isolation between noisy digital circuitry and precision analog stages, reduces substrate-induced offset and distortion, and helps prevent latch-up by clamping the local substrate or well potential and collecting injected minority carriers.

C. Cadence Layout Schematic

Taking all of the above into account, the final op-amp layout is shown in Fig. 8. In Fig. 9, which shows the current mirror, M_3 is a diode-connected transistor implemented with a single finger. To keep the structure symmetric, three of the five fingers of the dummy transistor M_7 are placed to the left and top side of M_3, while the remaining two dummy fingers are placed at

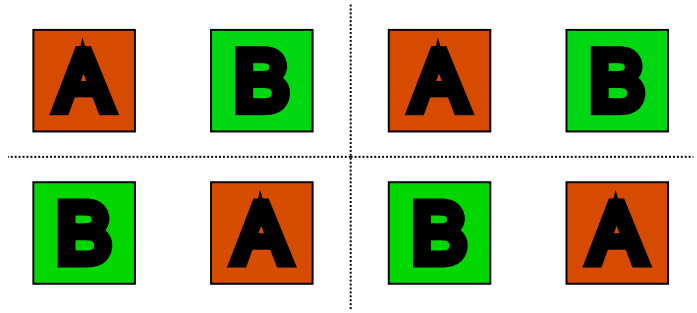

Fig. 6: Transistor symmetry to achieve matching

the far right to balance the full array. This is why a five-finger dummy transistor was selected.

In Fig. 10, which shows the NMOS differential pair, M_0 and M_2 follow the symmetric pattern introduced in Fig. 6 to improve matching. This can be seen from the way their gates (driven by V_{in} and V_{ip}) are connected with Metal 1, highlighted in light green. We can also see the PMOS transistors $M_1, M_5,$ and M_8 along with the resistor.

D. Design Rule Checklist (DRC)

To ensure that the layout complies with the design rules imposed by the PDK, a design rule check (DRC) is run. The DRC verifies that all geometries, spacings, and layer usages satisfy the foundry requirements so that the design can be fabricated reliably. In Fig. 7, the results of the DRC returns with no errors thus our layout can be fabricated.

E. Layout vs Schematic (LVS)

Having confirmed that the layout is free of DRC errors, the next step is to verify that its connectivity matches the original schematic. This is done with a Layout Versus Schematic (LVS) check, which compares the extracted netlist from the layout to the schematic netlist to ensure a one-to-one correspondence. Figure 11 shows the LVS results, indicating that the layout matches the schematic. If LVS reports any errors, they are corrected in the layout and LVS is rerun; once LVS is clean, DRC is run again to confirm that the fixes did not introduce new rule violations.

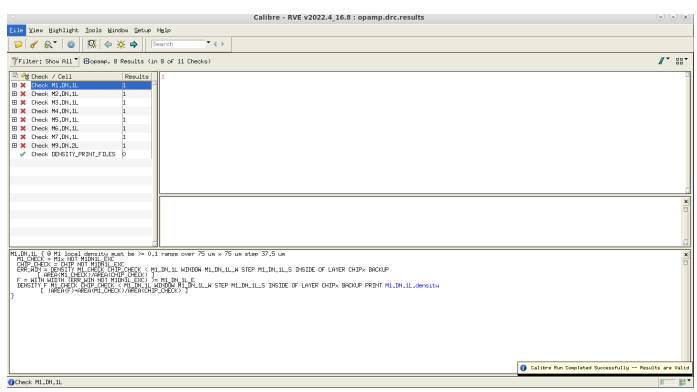

Fig. 7: Design rule check results, indicating that our layout can be fabricated

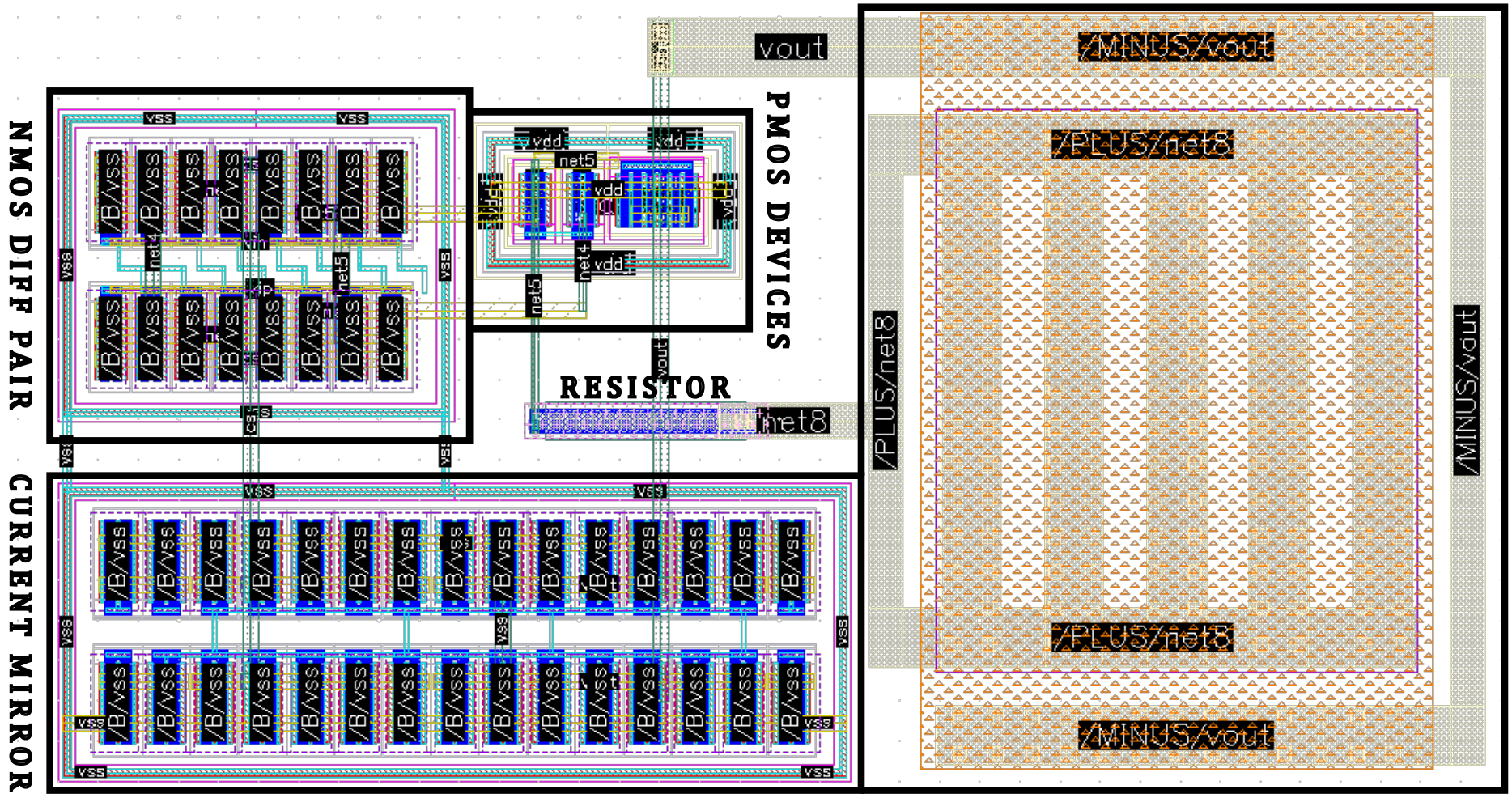

Fig. 8: Cadence schematic of the physical layout of the Op-Amp

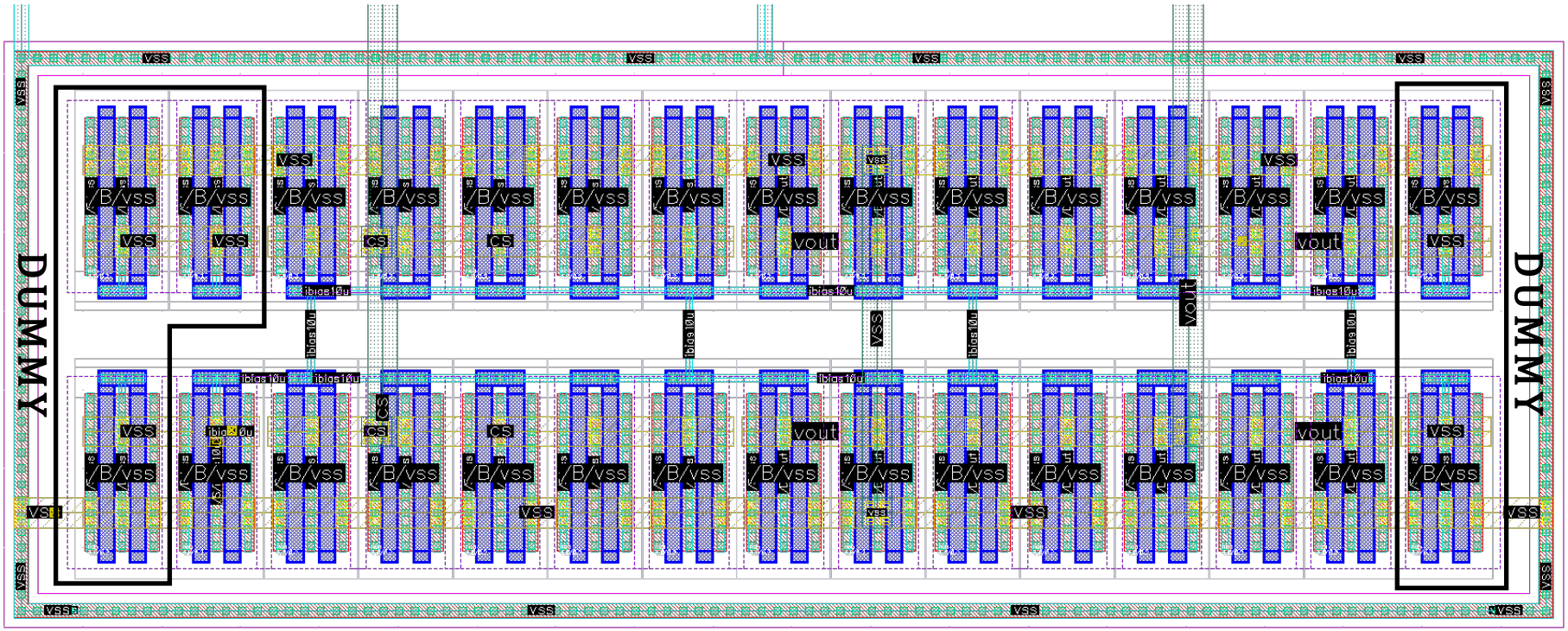

Fig. 9: Cadence schematic of the physical layout of the current mirror

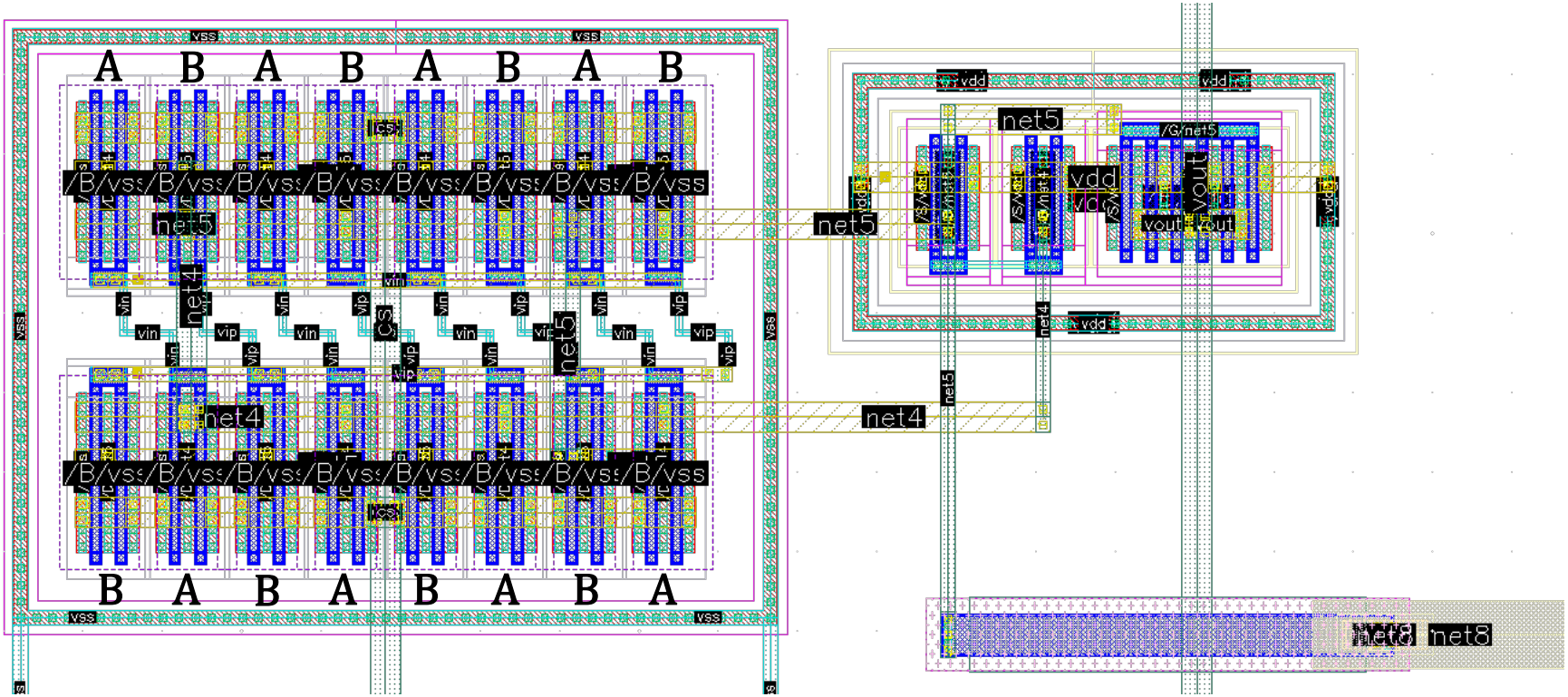

Fig. 10: Cadence schematic of the physical layout of the NMOS differential pair, PMOS transistors and resistor

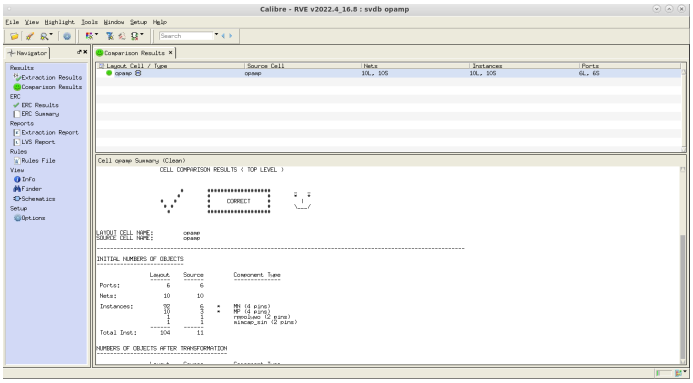

Fig. 11: Layout vs schematic results, indicating that our layout matches the original schematic

F. Parasitics Extraction (PEX)

Finally, parasitic extraction (PEX) is performed to capture the additional resistances, capacitances, introduced by the physical layout. The tool generates an extracted netlist that includes these layout-dependent parasitics, which is then used for post-layout simulations to verify that the implemented design still meets the targeted specifications.

V. Results

A. Pre-Layout Results

The small-signal AC response of the op-amp was first evaluated at schematic level, without layout parasitics. Figures 12a and 12b show the Bode magnitude and phase plots of V_{out}, respectively. From the magnitude plot, the low-frequency gain is approximately $44.81\,\mathrm{dB}$, and the unity-gain bandwidth is $f_{\mathrm{UGB}} \approx 8.628\,\mathrm{MHz}$. The phase plot indicates a phase margin of about 60.55°, which provides comfortable stability for the intended closed-loop configurations. At this stage, the results mainly reflect the idealized device models and the intentional compensation network, with only minimal parasitics from the schematic devices.

B. Post-Layout Results

After layout and parasitic extraction, the same AC analysis was repeated using the extracted netlist. The corresponding Bode magnitude and phase responses are shown in Figures 12c and 12d. The unity-gain bandwidth becomes $f_{\mathrm{UGB}} \approx 8.745\,\mathrm{MHz}$, and the low-frequency gain slightly decreases to $44.29\,\mathrm{dB}$. This small reduction (about $0.5\,\mathrm{dB}$) indicates that the additional resistive and capacitive parasitics introduced by the layout have only a minor impact on the overall gain. The most noticeable change is in phase margin, which drops to approximately 52.58°. This reduction is consistent with the extra capacitive loading and series resistance from interconnect and vias that shift the non-dominant poles, but the phase margin remains above 45°, so the op-amp is still stable, though with slightly more ringing in transient responses.

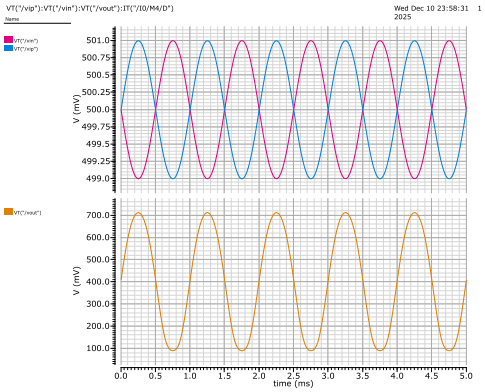

(a) Pre-layout Bode magnitude plot of V_{out}.

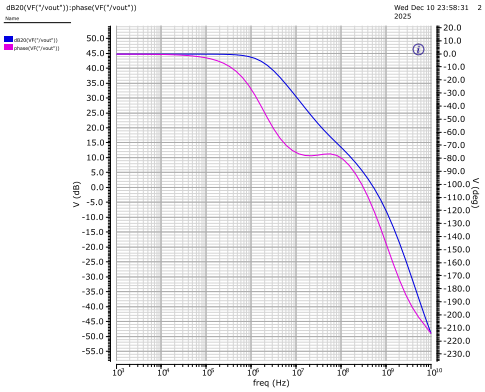

(b) Pre-layout Bode phase plot of V_{out}.

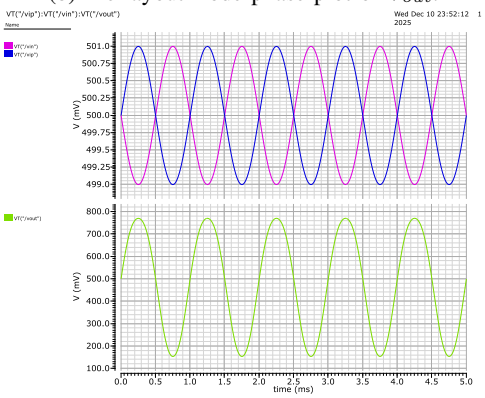

(c) Post-layout Bode magnitude plot including extracted parasitics.

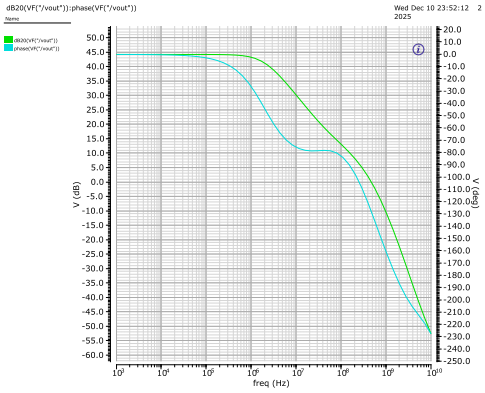

(d) Post-layout Bode phase plot including extracted parasitics.

Fig. 12: Pre-Layout and post-Layout results

VI. Conclusion

This work presented the complete flow for designing and implementing a two-stage CMOS operational amplifier in a 65-nm technology, starting from schematic-level analysis and ending with a DRC- and LVS-clean physical layout. The report reviewed the operation of the differential input stage, biasing network, and compensated second stage, then translated this understanding into a Cadence Virtuoso implementation using realistic PDK devices and a representative test bench. Particular emphasis was placed on layout aspects that are critical for analog performance, such as layer organization, symmetric device placement, dummy structures, guard rings, and careful via usage, in order to preserve matching and reduce substrate noise. Finally, pre- and post-layout AC simulations showed that the extracted parasitics have only a small impact on gain and unity-gain bandwidth, with a moderate but acceptable reduction in phase margin, confirming that the designed layout meets the targeted specifications while illustrating the practical trade-offs introduced by real-world layout effects

Acknowledgment

The author declares that the artificial intelligence (AI) tool Perplexity AI was employed in the preparation of this manuscript solely for linguistic refinement, grammar correction, and structural editing. The intellectual content, analysis, and conclusions presented in this work remain the exclusive responsibility of the author.