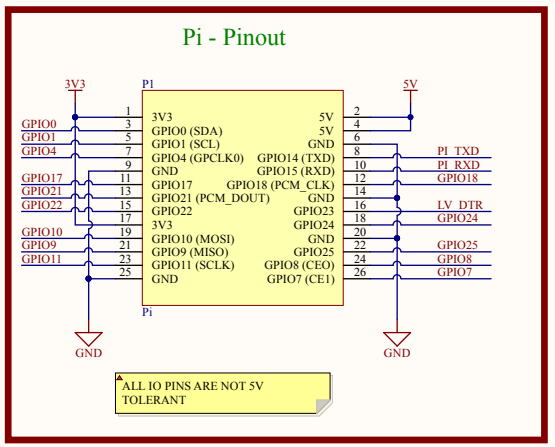

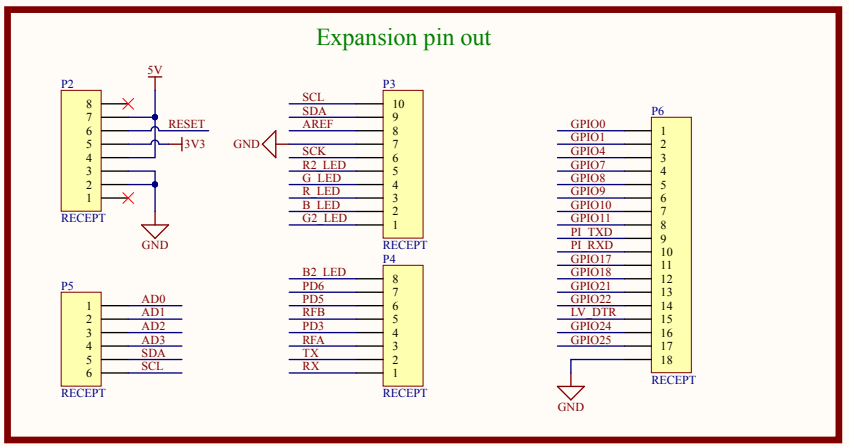

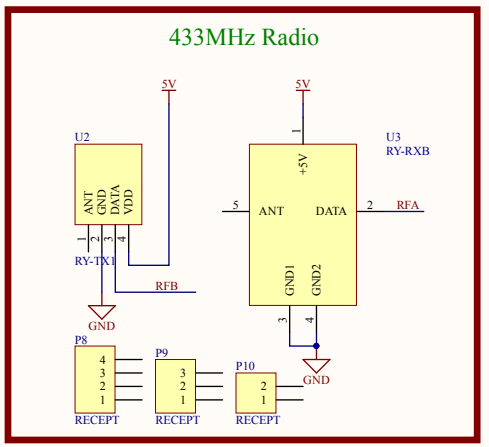

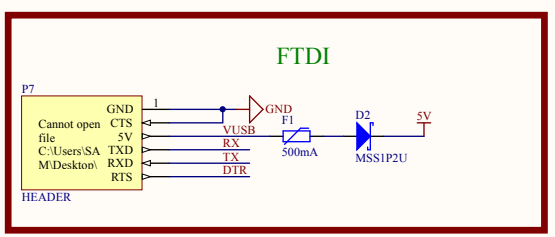

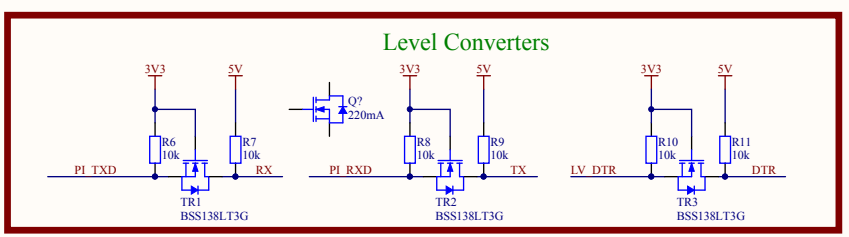

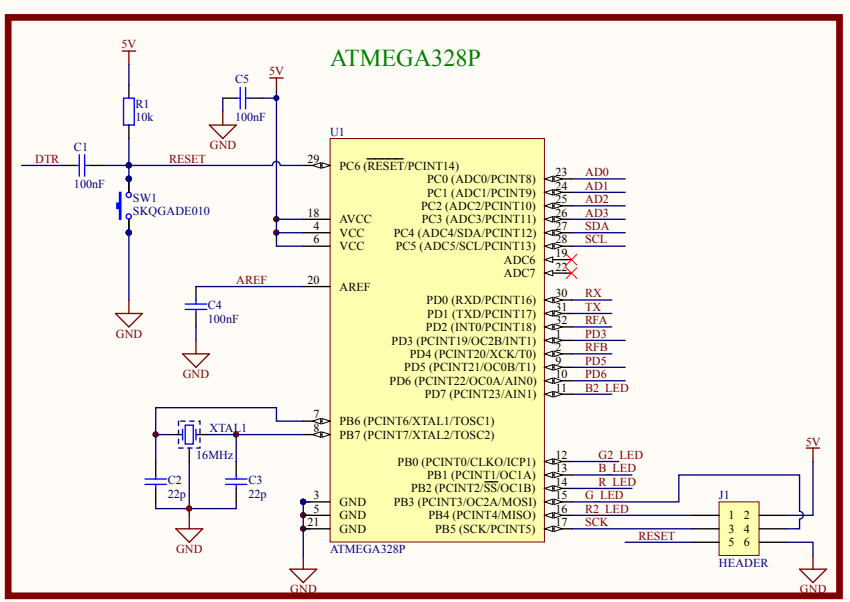

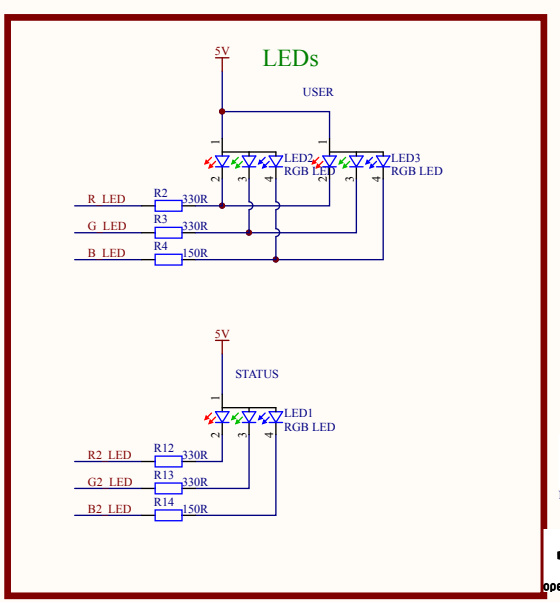

Notes

Ninja_Logo_LRG

LXDESIGNHOUSE
4 Cornwallis St, Suite 125 NIC, ATP
Eveleigh, NSW 2015 +61-2-92094133

open hardware

PROJECT:	Arduino Cape.PrjPcb
TITLE:	Arduino Cape.SchDoc
PRINTED: 22/04/2013	REV: * SHEET: * OF *