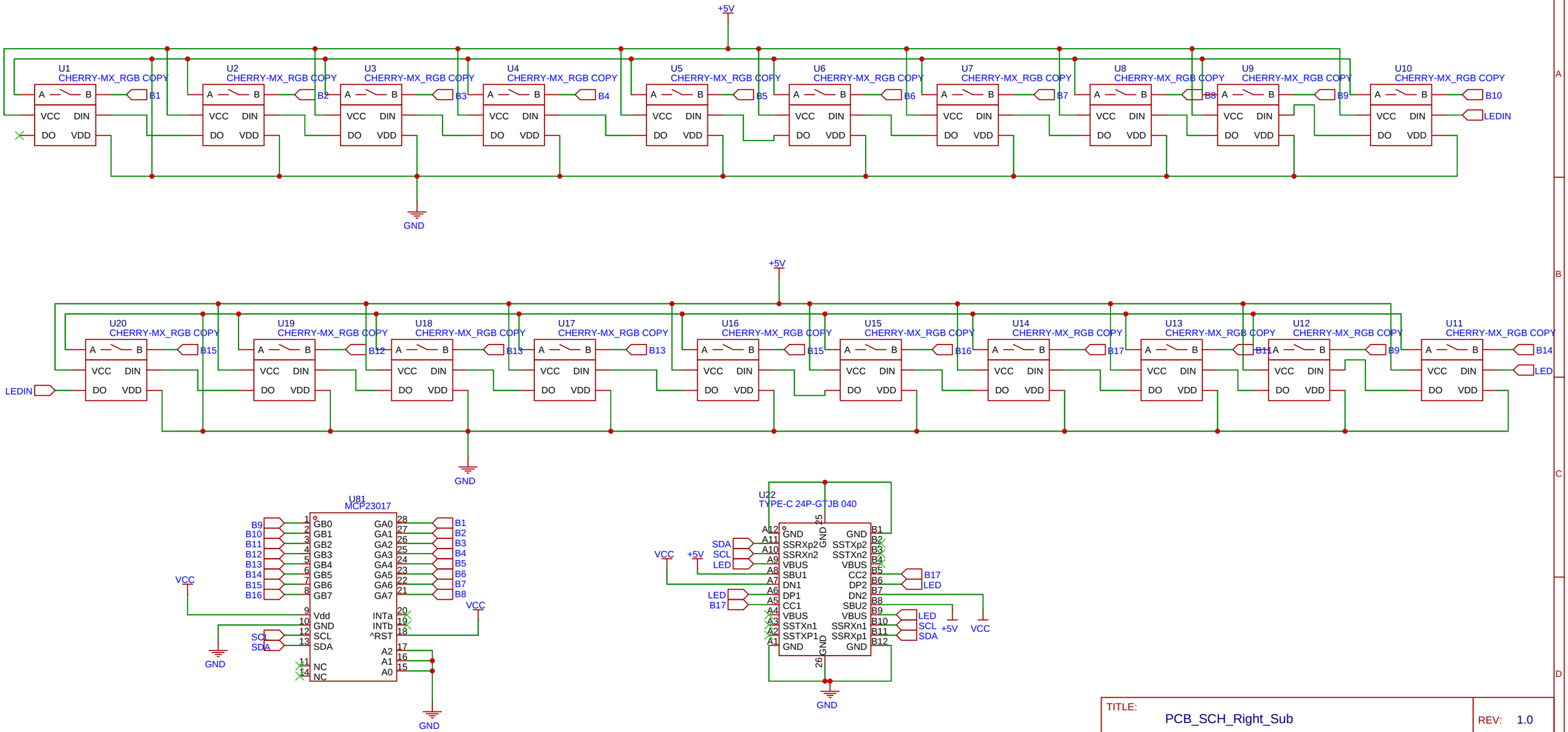


| | |
|---|---|
| TITLE: PCB_SCH_Right_Sub | REV: 1.0 |
| Company: | Sheet: 1/1 |
| Date: 10/24/2025 Drawn By: Habana | |