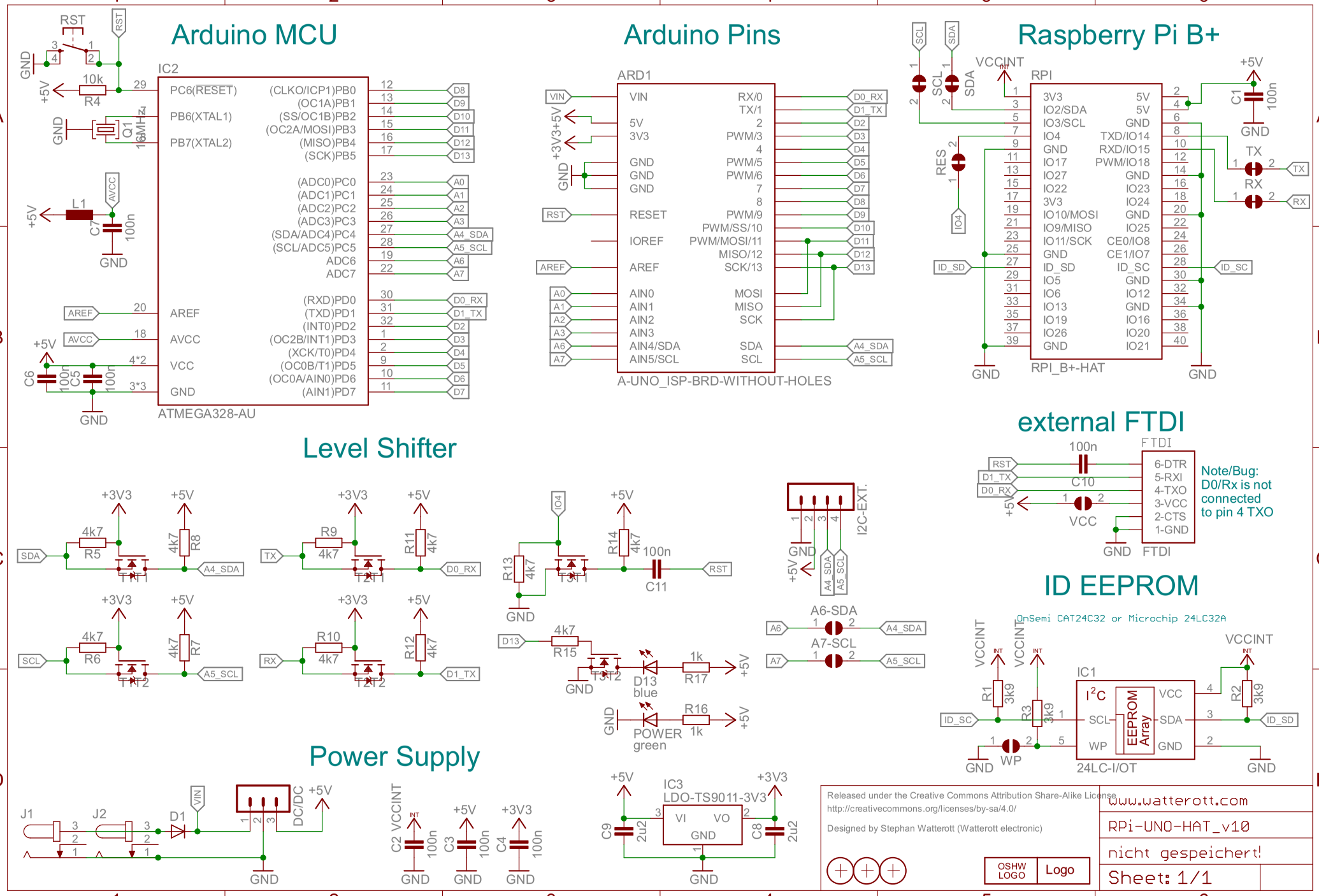
Arduino MCU
IC2
ATMEGA328-AU
RST
10k
R4
Q1
16MHz
L1
C7
100n
C6
C5
PC6(RESET)
PB6(XTAL1)
PB7(XTAL2)
AREF
AVCC
VCC
GND
(CLKO/ICP1)PB0
(OC1A)PB1
(SS/OC1B)PB2
(OC2A/MOSI)PB3
(MISO)PB4
(SCK)PB5
(ADC0)PC0
(ADC1)PC1
(ADC2)PC2
(ADC3)PC3
(SDA/ADC4)PC4
(SCL/ADC5)PC5
ADC6
ADC7
(RXD)PD0
(TXD)PD1
(INT0)PD2
(OC2B/INT1)PD3
(XCK/T0)PD4
(OC0B/T1)PD5
(OC0A/AIN0)PD6
(AIN1)PD7
Arduino Pins
ARD1
A-UNO_ISP-BRD-WITHOUT-HOLES
VIN
5V
3V3
RESET
IOREF
AIN0
AIN1
AIN2
AIN3
AIN4/SDA
AIN5/SCL
RX/0
TX/1
PWM/3
PWM/5
PWM/6
PWM/9
PWM/SS/10
PWM/MOSI/11
MISO/12
SCK/13
MOSI
MISO
SCK
SDA
SCL
Raspberry Pi B+
RPI
RPI_B+-HAT
VCCINT
3V3
IO2/SDA
IO3/SCL
IO4
IO17
IO27
IO22
IO10/MOSI
IO9/MISO
IO11/SCK
ID_SD
IO5
IO6
IO13
IO19
IO26
5V
TXD/IO14
RXD/IO15
PWM/IO18
IO23
IO24
IO25
CE0/IO8
CE1/IO7
ID_SC
IO12
IO16
IO20
IO21
RES
C1
100n
TX
RX
Level Shifter
R5
4k7
R6
R7
R8
R9
R10
R11
R12
R13
R14
R15
R16
R17
T1-1
T1-2
T2-1
T2-2
T3-1
T3-2
C11
D13
blue
POWER
green
1k
I2C-EXT.
A6-SDA
A7-SCL
external FTDI
FTDI
C10
6-DTR
5-RXI
4-TXO
3-VCC
2-CTS
1-GND
Note/Bug:
D0/Rx is not
connected
to pin 4 TXO
ID EEPROM
OnSemi CAT24C32 or Microchip 24LC32A
IC1
I²C
EEPROM Array
SCL
SDA
WP
VCC
GND
24LC-I/OT
R1
R2
R3
3k9
Power Supply
J1
J2
D1
DC/DC
C2 VCCINT
C3
C4
IC3
LDO-TS9011-3V3
VI
VO
C9
C8
2u2
Released under the Creative Commons Attribution Share-Alike License
http://creativecommons.org/licenses/by-sa/4.0/
Designed by Stephan Watterott (Watterott electronic)
OSHW LOGO
Logo
www.watterott.com
RPi-UNO-HAT_v10
nicht gespeichert!
Sheet: 1/1

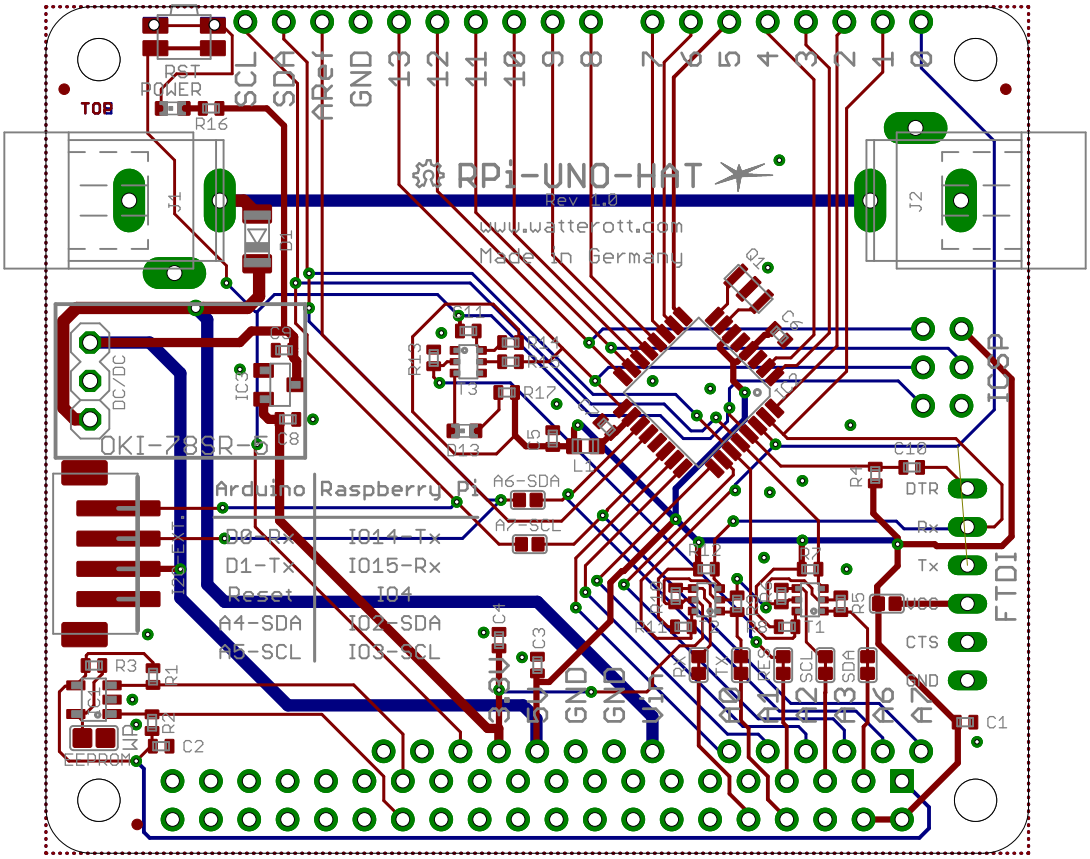
RPi-UNO-HAT
Rev 1.0
www.watterott.com
Made in Germany
TOP
RST
POWER
R16
SCL
SDA
AREF
GND
13
12
11
10
9
8
7
6
5
4
3
2
1
0
J1
J2
J4
D1
DC/DC
OKI-78SR-5
IC2
C9
C8
Arduino
Raspberry Pi
D0-Rx
IO14-Tx
D1-Tx
IO15-Rx
Reset
IO4
A4-SDA
IO2-SDA
A5-SCL
IO3-SCL
A6-SDA
A7-SCL
EXT.
R3
R1
R2
C2
EEPROM
WP
C4
C3
GND
GND
A6
A7
A4
A5
A2
A3
SCL
SDA
D6
D7
C10
R4
DTR
Rx
Tx
Vcc
CTS
GND
FTDI
C1
ICSP
R5
T1
R13
R14
R15
R17
R18
R12
R7
R8
R9
R10
R11
L1
D13
T3
C5
C6
C7