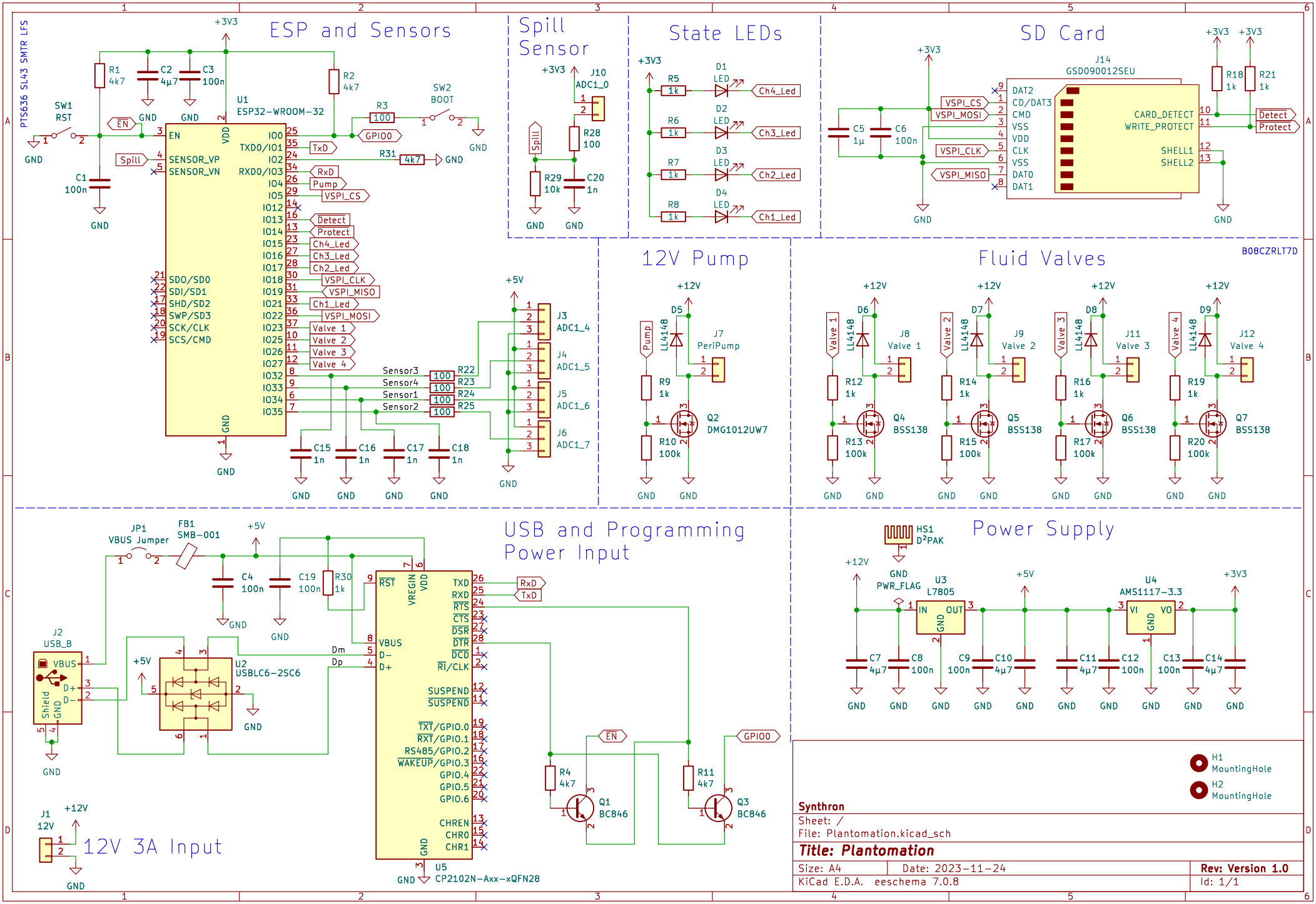
ESP and Sensors
PTS636 SL43 SMTR LFS
SW1 RST
U1 ESP32-WROOM-32
EN
SENSOR_VP
SENSOR_VN
SDO/SD0
SDI/SD1
SHD/SD2
SWP/SD3
SCK/CLK
SCS/CMD
IO0
TXD0/IO1
IO2
RXD0/IO3
IO4
IO5
IO12
IO13
IO14
IO15
IO16
IO17
IO18
IO19
IO21
IO22
IO23
IO25
IO26
IO27
IO32
IO33
IO34
IO35
VDD
GND
R1 4k7
C2 4µ7
C3 100n
C1 100n
R2 4k7
R3 100
SW2 BOOT
R31 4k7
GPIO0
TxD
RxD
Pump
VSPI_CS
Detect
Protect
Ch4_Led
Ch3_Led
Ch2_Led
VSPI_CLK
VSPI_MISO
Ch1_Led
VSPI_MOSI
Valve 1
Valve 2
Valve 3
Valve 4
Spill
Sensor3
Sensor4
Sensor1
Sensor2
R22
R23
R24
R25
C15 1n
C16 1n
C17 1n
C18 1n
J3 ADC1_4
J4 ADC1_5
J5 ADC1_6
J6 ADC1_7
Spill Sensor
J10 ADC1_0
R28 100
R29 10k
C20 1n
State LEDs
R5 1k
R6 1k
R7 1k
R8 1k
D1 LED
D2 LED
D3 LED
D4 LED
Ch4_Led
Ch3_Led
Ch2_Led
Ch1_Led
SD Card
J14 GSD090012SEU
DAT2
CD/DAT3
CMD
VSS
VDD
CLK
VSS
DAT0
DAT1
CARD_DETECT
WRITE_PROTECT
SHELL1
SHELL2
VSPI_CS
VSPI_MOSI
VSPI_CLK
VSPI_MISO
C5 1µ
C6 100n
R18 1k
R21 1k
Detect
Protect
12V Pump
D5 LL4148
J7 PeriPump
R9 1k
R10 100k
Q2 DMG1012UW7
Pump
Fluid Valves
B08CZRLT7D
D6 LL4148
D7 LL4148
D8 LL4148
D9 LL4148
J8 Valve 1
J9 Valve 2
J11 Valve 3
J12 Valve 4
R12 1k
R13 100k
R14 1k
R15 100k
R16 1k
R17 100k
R19 1k
R20 100k
Q4 BSS138
Q5 BSS138
Q6 BSS138
Q7 BSS138
USB and Programming
Power Input
JP1 VBUS Jumper
FB1 SMB-001
C4 100n
C19 100n
R30 1k
J2 USB_B
VBUS
D+
D-
Shield
U2 USBLC6-2SC6
Dm
Dp
RST
VREGIN
VDD
TXD
RXD
RTS
CTS
DSR
DTR
DCD
RI/CLK
SUSPEND
TXT/GPIO.0
RXT/GPIO.1
RS485/GPIO.2
WAKEUP/GPIO.3
GPIO.4
GPIO.5
GPIO.6
CHREN
CHR0
CHR1
U5 CP2102N-Axx-xQFN28
R4 4k7
Q1 BC846
R11 4k7
Q3 BC846
EN
GPIO0
J1 12V
12V 3A Input
Power Supply
HS1 D²PAK
PWR_FLAG
U3 L7805
IN
OUT
C7 4µ7
C8 100n
C9 100n
C10 4µ7
U4 AMS1117-3.3
VI
VO
C11 4µ7
C12 100n
C13 100n
C14 4µ7
H1 MountingHole
H2 MountingHole
Synthron
Sheet: /
File: Plantomation.kicad_sch
Title: Plantomation
Size: A4
Date: 2023-11-24
Rev: Version 1.0
KiCad E.D.A. eeschema 7.0.8
Id: 1/1