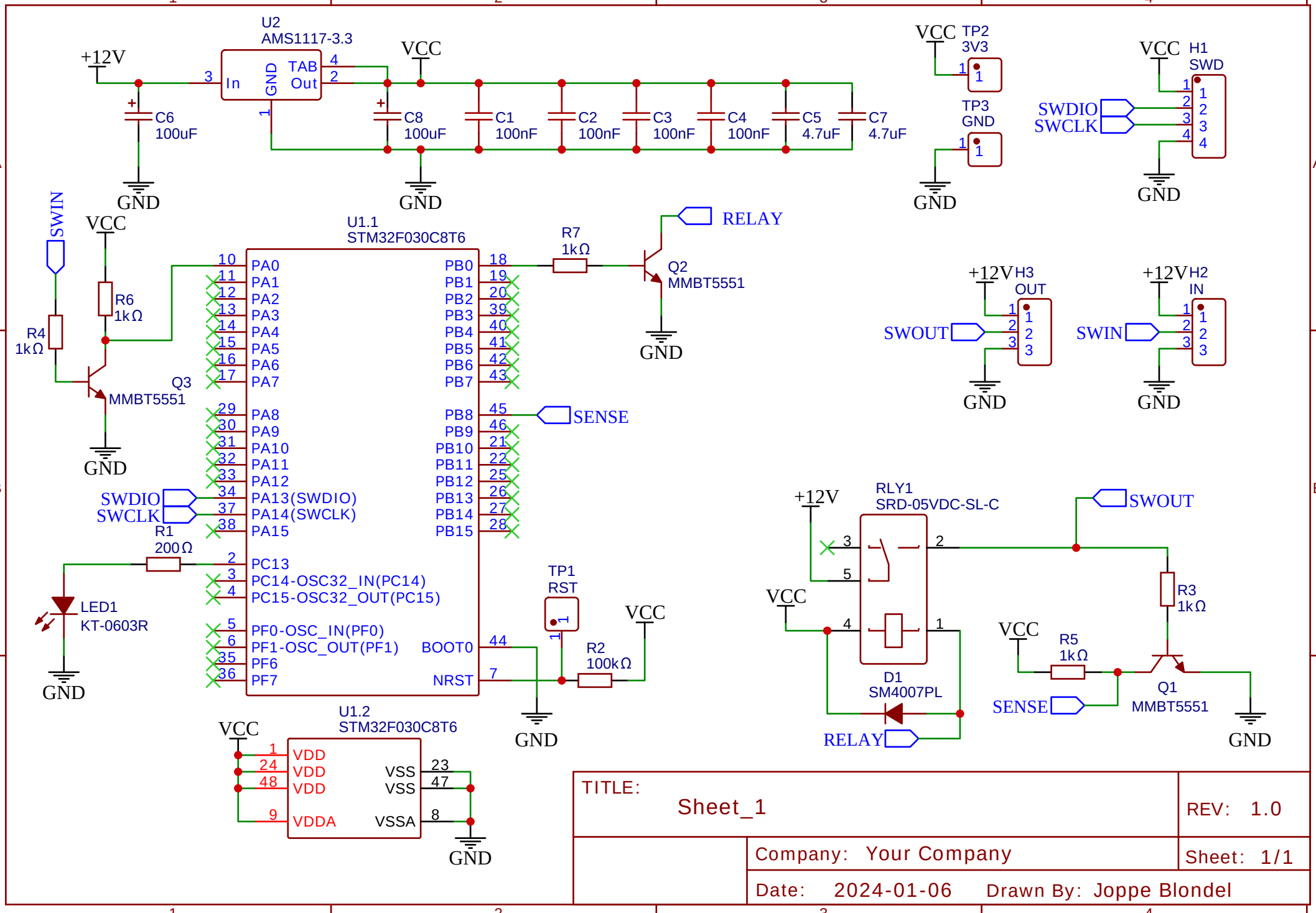
U2
AMS1117-3.3
+12V
In
GND
TAB
Out
VCC
C6
100uF
C8
100uF
C1
100nF
C2
100nF
C3
100nF
C4
100nF
C5
4.7uF
C7
4.7uF
GND
TP2
3V3
TP3
GND
H1
SWD
SWDIO
SWCLK
SWIN
R6
1kΩ
R4
1kΩ
Q3
MMBT5551
U1.1
STM32F030C8T6
PA0
PA1
PA2
PA3
PA4
PA5
PA6
PA7
PA8
PA9
PA10
PA11
PA12
PA13(SWDIO)
PA14(SWCLK)
PA15
PC13
PC14-OSC32_IN(PC14)
PC15-OSC32_OUT(PC15)
PF0-OSC_IN(PF0)
PF1-OSC_OUT(PF1)
PF6
PF7
PB0
PB1
PB2
PB3
PB4
PB5
PB6
PB7
PB8
PB9
PB10
PB11
PB12
PB13
PB14
PB15
BOOT0
NRST
R7
1kΩ
Q2
MMBT5551
RELAY
SENSE
R1
200Ω
LED1
KT-0603R
TP1
RST
R2
100kΩ
U1.2
STM32F030C8T6
VDD
VDDA
VSS
VSSA
H3
OUT
SWOUT
H2
IN
SWIN
RLY1
SRD-05VDC-SL-C
D1
SM4007PL
R3
1kΩ
R5
1kΩ
Q1
MMBT5551
TITLE:
Sheet_1
REV: 1.0
Company: Your Company
Sheet: 1/1
Date: 2024-01-06
Drawn By: Joppe Blondel