TP Routage dynamique avec RIP (Routing Information Protocol)

TP Routage dynamique avec RIP (Routing Information Protocol)

- Topologie du réseau
- configuration du Protocole RIP
  - Router0
  - Router1
  - Router 2
  - Router 3
  - Router 4
- Vérifications via un ping entre les 2 PC
- Désactivation de l'envoie de paquet RIP sur l'interface gig0/0 du routeur 1
- Diffuser à tout les router une adresse IP par défaut

Topologie du réseau

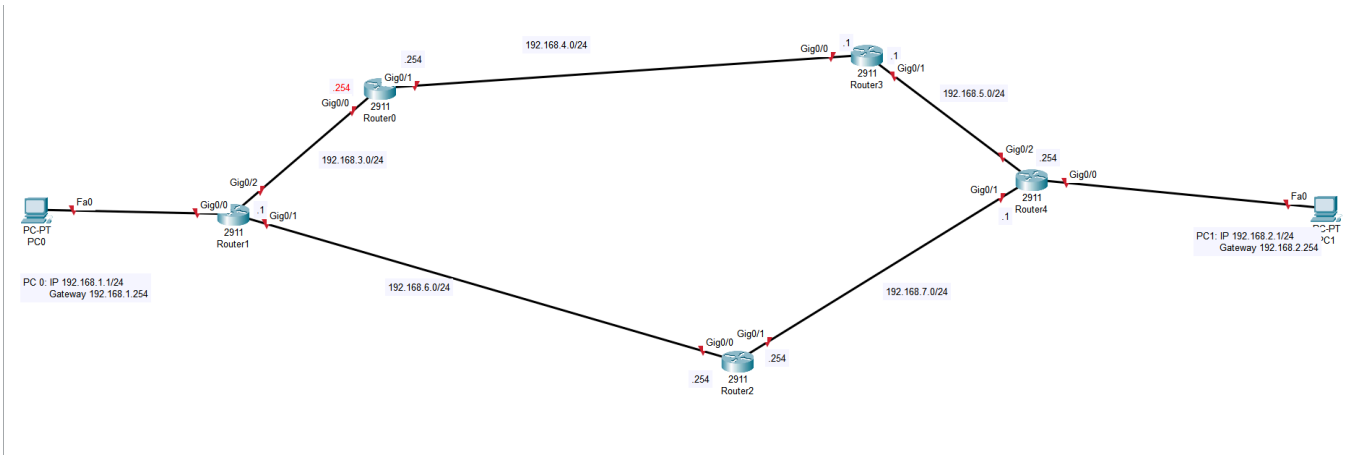

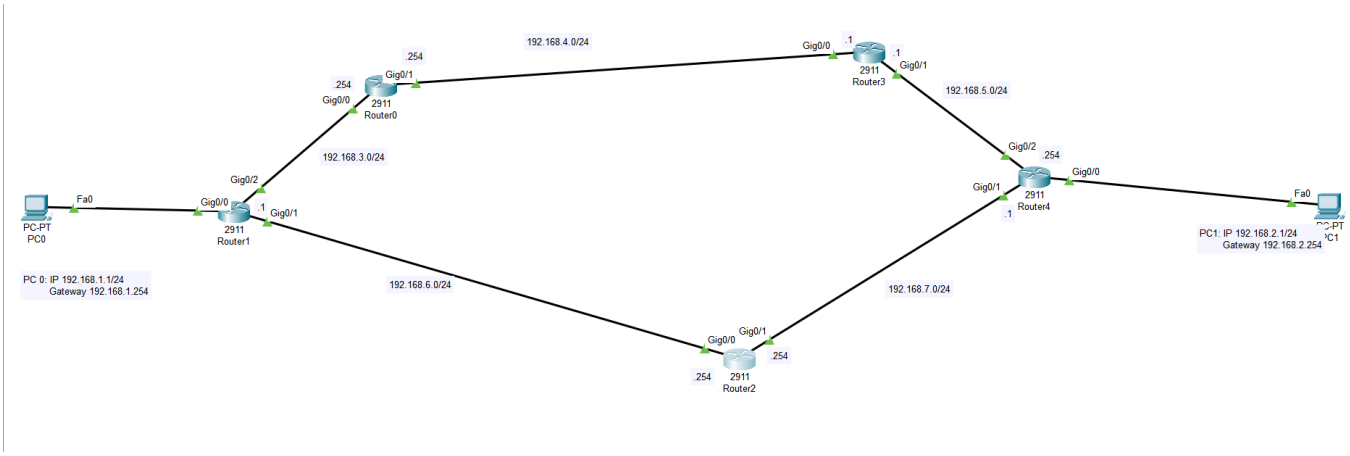

configuration du Protocole RIP

Router0

```
conf t
router rip
network 192.168.3.0
network 192.168.4.0
```

Router1

```
conf t
router rip
network 192.168.1.0
network 192.168.3.0
network 192.168.6.0
exit
do sh ip route
```

La lettre R est pour signifier que cette route suis le protocole RIP

```
Router#configure t
Enter configuration commands, one per line.  End with CNTL/Z.
Router(config)#router rip
Router(config-router)#network 192.168.1.0
Router(config-router)#network 192.168.3.0
Router(config-router)#network 192.168.6.0
Router(config-router)#exit

Router#sh ip route
Codes: L - local, C - connected, S - static, R - RIP, M - mobile, B - BGP
       D - EIGRP, EX - EIGRP external, O - OSPF, IA - OSPF inter area
       N1 - OSPF NSSA external type 1, N2 - OSPF NSSA external type 2
       E1 - OSPF external type 1, E2 - OSPF external type 2, E - EGP
       i - IS-IS, L1 - IS-IS level-1, L2 - IS-IS level-2, ia - IS-IS inter area
       * - candidate default, U - per-user static route, o - ODR
       P - periodic downloaded static route

Gateway of last resort is not set

     192.168.1.0/24 is variably subnetted, 2 subnets, 2 masks
C       192.168.1.0/24 is directly connected, GigabitEthernet0/0
L       192.168.1.254/32 is directly connected, GigabitEthernet0/0
R    192.168.2.0/24 [120/2] via 192.168.6.254, 00:00:01, GigabitEthernet0/1
     192.168.3.0/24 is variably subnetted, 2 subnets, 2 masks
C       192.168.3.0/24 is directly connected, GigabitEthernet0/2
L       192.168.3.1/32 is directly connected, GigabitEthernet0/2
R    192.168.4.0/24 [120/1] via 192.168.3.254, 00:00:21, GigabitEthernet0/2
R    192.168.5.0/24 [120/2] via 192.168.3.254, 00:00:21, GigabitEthernet0/2
                    [120/2] via 192.168.6.254, 00:00:01, GigabitEthernet0/1
     192.168.6.0/24 is variably subnetted, 2 subnets, 2 masks
C       192.168.6.0/24 is directly connected, GigabitEthernet0/1
```

Router 2

```
conf t
router rip
network 192.168.6.0
network 192.168.7.0
```

Router 3

```
conf t
router rip
network 192.168.4.0
network 192.168.5.0
```

Router 4

```
conf t
router rip
network 192.168.2.0
network 192.168.5.0
network 192.168.7.0
```

Vérifications via un ping entre les 2 PC

```
C:\>ping 192.168.2.1

Pinging 192.168.2.1 with 32 bytes of data:

Request timed out.
Reply from 192.168.2.1: bytes=32 time<1ms TTL=125
Reply from 192.168.2.1: bytes=32 time<1ms TTL=125
Reply from 192.168.2.1: bytes=32 time<1ms TTL=125

Ping statistics for 192.168.2.1:
    Packets: Sent = 4, Received = 3, Lost = 1 (25% loss),
Approximate round trip times in milli-seconds:
    Minimum = 0ms, Maximum = 0ms, Average = 0ms

C:\>ping 192.168.2.1

Pinging 192.168.2.1 with 32 bytes of data:

Reply from 192.168.2.1: bytes=32 time=15ms TTL=125
Reply from 192.168.2.1: bytes=32 time<1ms TTL=125
Reply from 192.168.2.1: bytes=32 time=1ms TTL=125
Reply from 192.168.2.1: bytes=32 time<1ms TTL=125

Ping statistics for 192.168.2.1:
    Packets: Sent = 4, Received = 4, Lost = 0 (0% loss),
Approximate round trip times in milli-seconds:
    Minimum = 0ms, Maximum = 15ms, Average = 4ms

C:\>
```

Désactivation de l'envoie de paquet RIP sur l'interface gig0/0 du routeur 1

```
Router(config)#router rip
Router(config-router)#passive-interface gig
Router(config-router)#passive-interface gigabitEthernet 0/0
```

Diffuser à tout les router une adresse IP par défaut

```
Router(config)#ip route 0.0.0.0 0.0.0.0 gigabitEthernet 0/0
Router(config)#router rip
Router(config-router)#default-information originate
Router(config-router)#passive-interface gigabitEthernet 0/0
```

```
R    192.168.1.0/24 [120/2] via 192.168.7.254, 00:00:29, GigabitEthernet0/1
     192.168.2.0/24 is variably subnetted, 2 subnets, 2 masks
C       192.168.2.0/24 is directly connected, GigabitEthernet0/0
L       192.168.2.254/32 is directly connected, GigabitEthernet0/0
R    192.168.3.0/24 [120/2] via 192.168.7.254, 00:00:29, GigabitEthernet0/1
                    [120/2] via 192.168.5.1, 00:00:01, GigabitEthernet0/2
R    192.168.4.0/24 [120/1] via 192.168.5.1, 00:00:01, GigabitEthernet0/2
     192.168.5.0/24 is variably subnetted, 2 subnets, 2 masks
C       192.168.5.0/24 is directly connected, GigabitEthernet0/2
L       192.168.5.254/32 is directly connected, GigabitEthernet0/2
R    192.168.6.0/24 [120/1] via 192.168.7.254, 00:00:29, GigabitEthernet0/1
     192.168.7.0/24 is variably subnetted, 2 subnets, 2 masks
C       192.168.7.0/24 is directly connected, GigabitEthernet0/1
L       192.168.7.1/32 is directly connected, GigabitEthernet0/1
R*   0.0.0.0/0 [120/2] via 192.168.7.254, 00:00:29, GigabitEthernet0/1
```