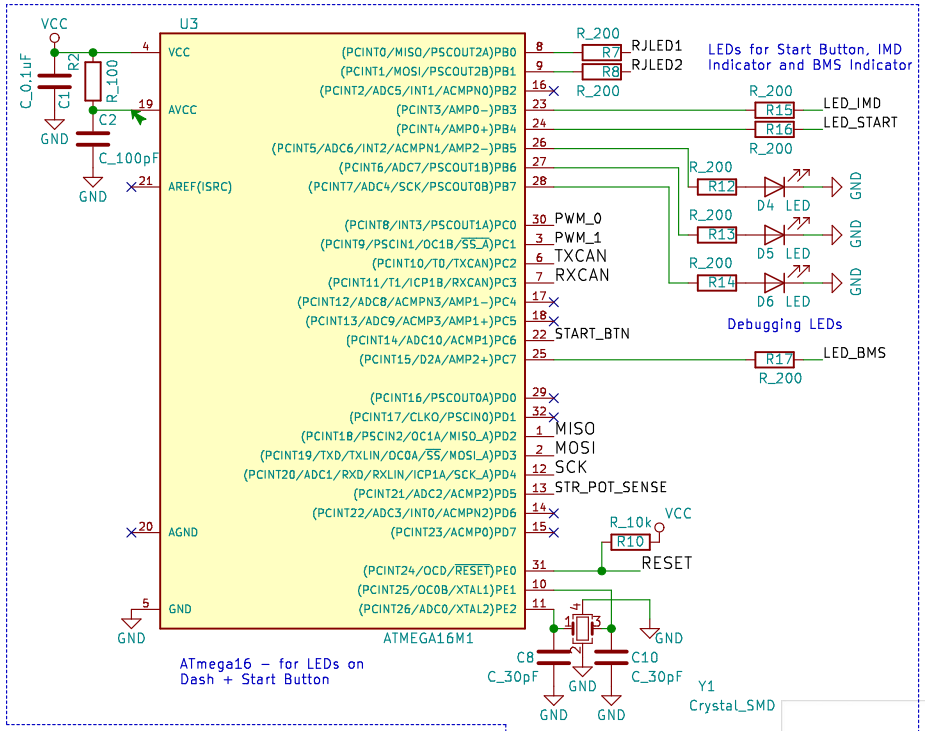

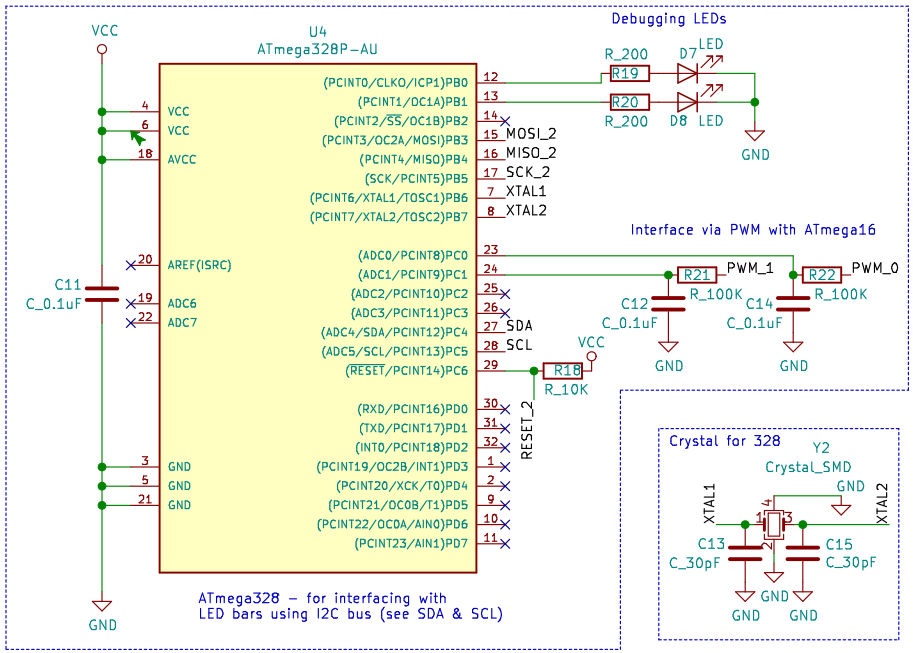

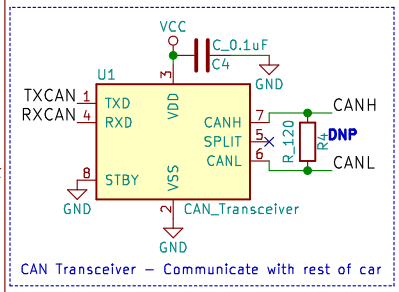

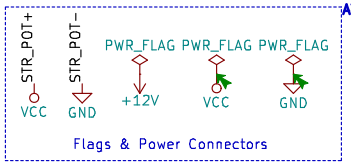

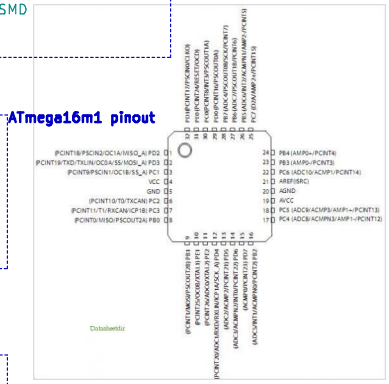

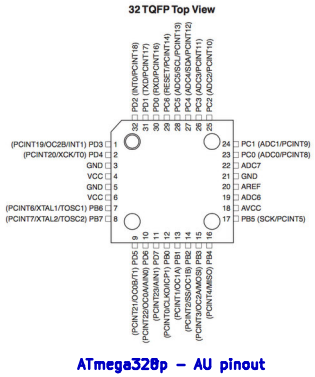

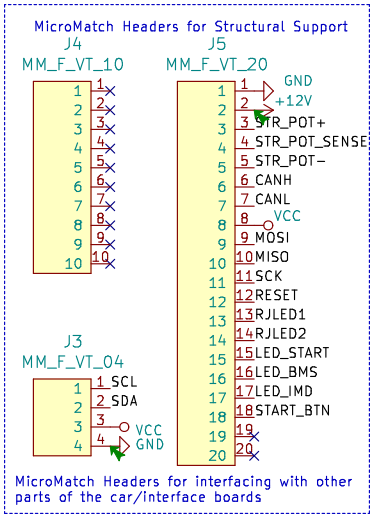

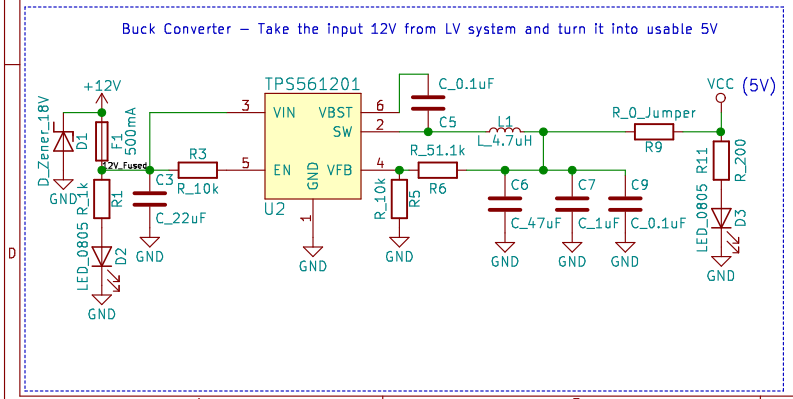

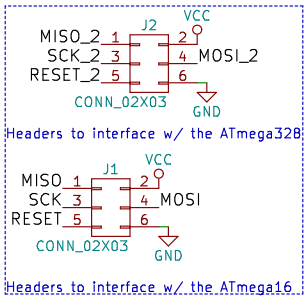

Aditya Sudhakar
Olin Electric Motorsports
Sheet: /
File: dashboard_mk4.sch

Title: Dashboard–Right Mk4

Size: A	Date:	Rev: 2
KiCad E.D.A. kicad 5.0.1-33cea8e68ubuntu18.04.1		Id: 1/1