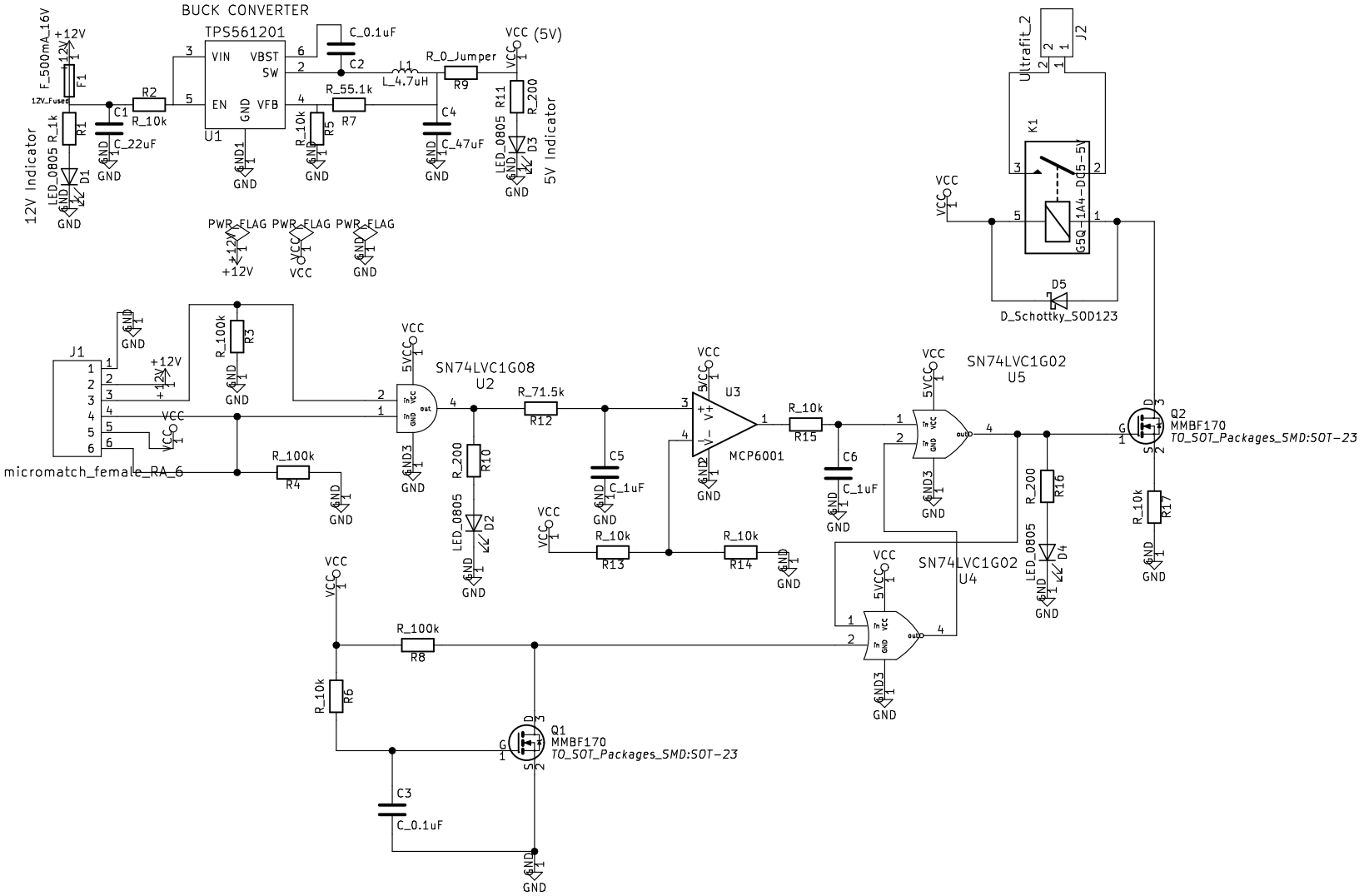

Olin Electric Motorsports

Sheet: /

File: BSPD.sch

Title: BSPD

Size: A	Date:	Rev:
KiCad E.D.A. kicad 4.0.2+dfsg1-stable		Id: 1/1