universität innsbruck

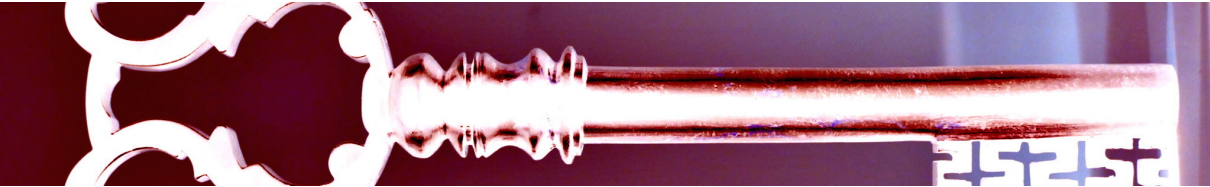

Cryptanalysis of Classical Ciphers

Cryptography

Verena Lachner

16 April 2026

Classification of Attacker Capabilities

(against confidentiality)

Ciphertext only	find plaintext	CO
Known plaintext	find other plaintext or key	KPA
Chosen plaintext	distinguish ciphertexts $\rightarrow$ access to encryption oracle	CPA
Chosen ciphertext	distinguish ciphertexts $\rightarrow$ access to decryption oracle	CCA
Adaptively chosen ciphertext	distinguish other ciphertexts $\rightarrow$ mix choice and oracle queries	CCA2
Related key	find plaintext or key $\rightarrow$ perform operations on key	

Classification of Attacker Success

(against confidentiality)

Total break	finding the key
Universal break	decryption without knowing the key
Semantic break	learning a “bit” about the message $\rightarrow$ ability to distinguish ciphertexts
Existential break	success for individual messages selective $\leftrightarrow$ random
Distinguisher	between ciphertext and random bits

Breaking a Cipher

Cryptanalytic success

A cryptanalytic attack is successful, if it is much better than brute-force.

Spritz, a stream cipher as drop-in replacement for RC4

Spritz generates a pseudo-random sequence from a secret internal state ($|\mathcal{K}| = 2^{1730}$).

Cryptanalysis (2016): *"We need approximately* 2^{1247} *assignments to recover the internal state."*

But: $2^{1247} \approx 10^{357} \gg (\#\text{atoms in the universe})^4$

We look at *classical ciphers* to understand principles of cryptanalysis.

$\longrightarrow$ All classical ciphers are insecure!

Source: Banik, S. and Isobe, T. *Cryptanalysis of the Full Spritz Stream Cipher* (2016), Conference on Fast Software Encryption.

Agenda

1. **Substitution Ciphers**
2. LFSR Stream Ciphers

Example: Shift Cipher

$\boldsymbol{m} \in \mathcal{M} = \{0, \ldots, 25\}^n$

$\boldsymbol{x} \in \mathcal{X} = \{0, \ldots, 25\}^n$

$k \in \mathcal{K} = \{0, \ldots, 25\}$

$z \overset{\mathcal{U}}{\sim} \{0, \ldots, 25\}$

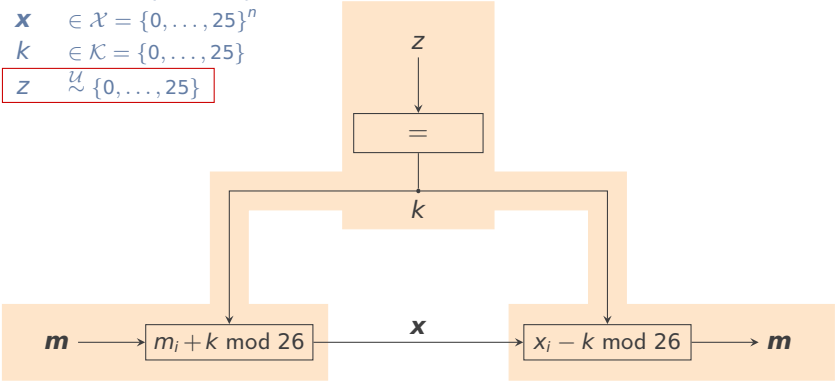

trusted area

Example: Monoalphabetic Substitution

Encrypt with a permutation of the alphabet.

Example of a permutation

m_i	A	B	C	D	E	F	G	H	I	J	K	L	M	N	O	P	Q	R	S	T	U	V	W	X	Y	Z
x_i	X	E	U	A	D	N	B	K	V	M	R	O	C	Q	F	S	Y	H	W	G	L	Z	I	J	P	T

Size of keyspace: $26! \approx 2^{88} \rightarrow$ secure against exhaustive search

But: Attacker has more sophisticated tools

Frequency Analysis

Ciphertext leaks information about plaintext

1. For any key, the mapping of each letter is fixed.
2. Redundancy in natural language induces a statistical distribution.

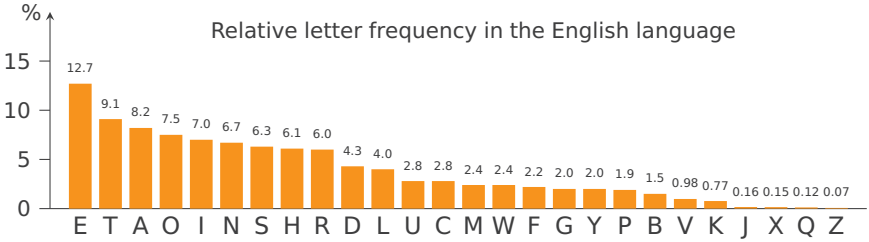

Frequency Analysis

This allows for a **ciphertext-only** attack.

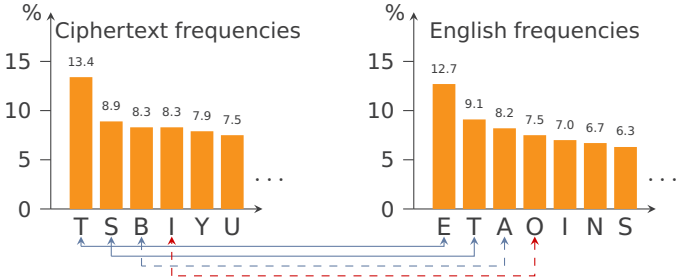

But the number of available ciphertext bits needs to be large.

For short ciphertexts, the attacker can additionally use sequential dependencies in language (e. g., bigrams and trigrams).

Example: Vigenère Cipher (Polyalphabetic Shift)

Smooth out the frequency distribution of the ciphertext by applying different keyed shift operations within a block of plaintext.

Vigenère

Plaintext	T E L L M E T H E R E S C A K E
Key (repeated)	N I C E N I C E N I C E N I C E
Ciphertext	H N O Q A N W M S A H X Q J N J

$$\boldsymbol{m} \in \mathcal{M} = \{0\ldots,25\}^n \qquad \boldsymbol{k} \in \mathcal{K} = \{0,\ldots,25\}^\ell \qquad \boldsymbol{x} \in \mathcal{X} = \{0,\ldots,25\}^n$$

$$\overbrace{m_0 m_1 \ldots m_{\ell-1}}^{\ell}\ \overbrace{m_\ell m_{\ell+1} \ldots m_{2\ell-1}}^{\ell}\ \overbrace{m_{2\ell} m_{2\ell+1} \ldots m_{3\ell-1}}^{\ell}\ \cdots$$

$$k_0\ k_1\ \ldots\ k_{\ell-1}\ \ k_0\ \ k_1\ \ \ldots\ \ k_{\ell-1}\ \ k_0\ \ k_1\ \ \ldots\ \ k_{\ell-1}\ \cdots$$

$$x_0\ x_1\ \ldots\ x_{\ell-1}\ \ x_\ell\ x_{\ell+1}\ \ldots\ x_{2\ell-1}\ \ x_{2\ell}\ x_{2\ell+1}\ \ldots\ x_{3\ell-1}\ \cdots$$

with $x_j = (m_j + k_j) \bmod 26 \quad \text{for } j = 1,\ldots,\ell$

Ciphertext-only Attack

1. Find key length ℓ:
   - Exhaustively try all possible keylengths
   - Index of coincidence
   - Kasiski's method
2. If the attacker knows the key length ℓ: Break by doing ℓ different frequency analyses.
   Needs ℓ times more intercepted ciphertext than regular shift cipher. Complexity also increases only linearly.

Can we Make Vigenère Secure ?

Yes, if $\ell = n$.
Then Vigenère becomes a OTP with alphabet size 26.
The key needs to be drawn randomly and independently.

Agenda

1. Substitution Ciphers
2. **LFSR Stream Ciphers**

Stream Cipher with PRNG

$\boldsymbol{m} \in \mathcal{M} = \{0,1\}^n$
$\boldsymbol{x} \in \mathcal{X} = \{0,1\}^n$
$\boldsymbol{k} \in \mathcal{K} = \{0,1\}^n$
$\boldsymbol{z} \overset{\mathcal{U}}{\sim} \{0,1\}^n$

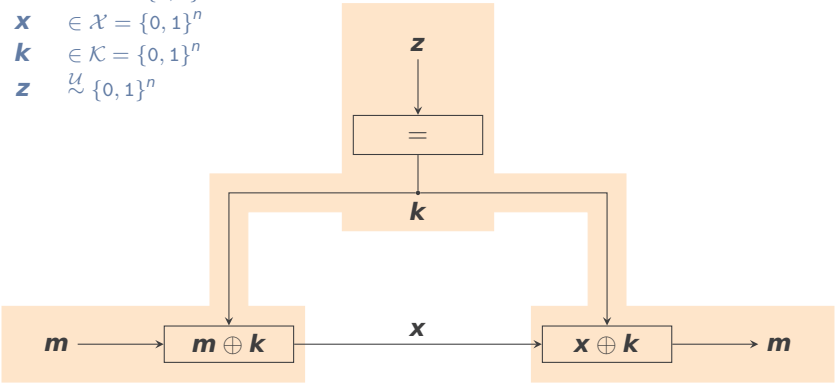

trusted area

Stream Cipher with PRNG

$\boldsymbol{m} \in \mathcal{M} = \{0,1\}^{n'}$

$\boldsymbol{x} \in \mathcal{X} = \{0,1\}^{n'}$

$\boldsymbol{k} \in \mathcal{K} = \{0,1\}^{n'}$

$\boldsymbol{z} \overset{\mathcal{U}}{\sim} \{0,1\}^{n}$

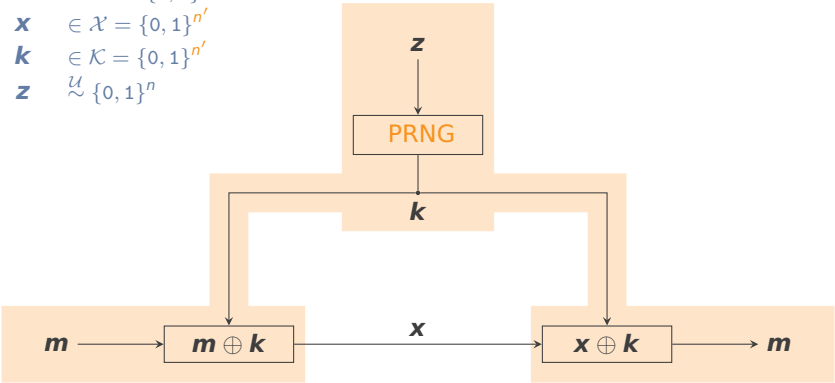

trusted area

Example: A5

Family of stream ciphers used for over-the-air encryption of global mobile communication (GSE).
Combination of *Linear Feedback Shift Registers* (easily implementable in hardware).

- **A5/1**: Kept secret (leaked 1994), intentionally weak to preserve eavesdropping abilities during the Cold War.
- **A5/2**: Deliberately crippled sibling of A5/1 for export with engineered backdoor.
- **A5/3 (KASUMI)**: publicly analyzed Feistel block cipher in CTR or OFB mode (modified by the ETSI).
  Weakness in the implementation of the surrounding infrastructure (fixes 10 bits of the 128 bit key).

Today, A5/1 can be totally broken in mere seconds on a standard PC.

Linear Feedback Shift Register (LFSR)

Example with degree $\ell = 3$ (i. e., 3 flip flops):

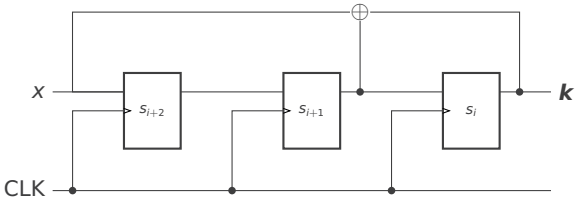

CLK	s_{i+2}	s_{i+1}	s_i
$i = 0$	1	0	0
$i = 1$	0	1	0
$i = 2$	1	0	1
$i = 3$	1	1	0
$i = 4$	1	1	1
$i = 5$	0	1	1
$i = 6$	0	0	1
$i = 7$	1	0	0

Output stream: 0010111 0010111 0010111...

This LFSR has a sequence length of 7.

Linear Feedback Shift Register (LFSR)

Maximal sequence length

The maximal sequence length of a LFSR with degree ℓ is $2^\ell - 1$.

Excursus: LFSRs can be represented as polynomials over GF(2).
A LFSR has maximal sequence length for all initial states (except the all-zero state), if its correspondig polynomial is *primitive*.

General Formulation of a LFSR of degree ℓ

Initial states $(s_0, s_1, \ldots, s_{\ell-1})$, Feedback vector $(a_0, a_1, \ldots, a_{\ell-1})$

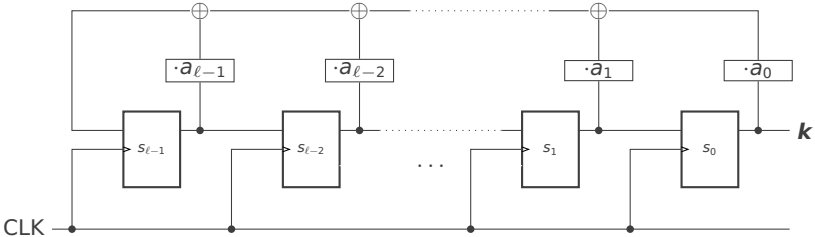

$$s_{i+\ell} = \sum_{j=0}^{\ell-1} a_j \cdot s_{i+j} \bmod 2, \quad i = 0, 1, 2, \ldots$$

LFSR as Keystream Generator

$\boldsymbol{m} \in \mathcal{M} = \{0,1\}^n$
$\boldsymbol{x} \in \mathcal{X} = \{0,1\}^n$
$\boldsymbol{k} \in \mathcal{K} = \{0,1\}^n$
$\boldsymbol{z} \overset{\mathcal{U}}{\sim} \{0,1\}^\ell$ (initial state)

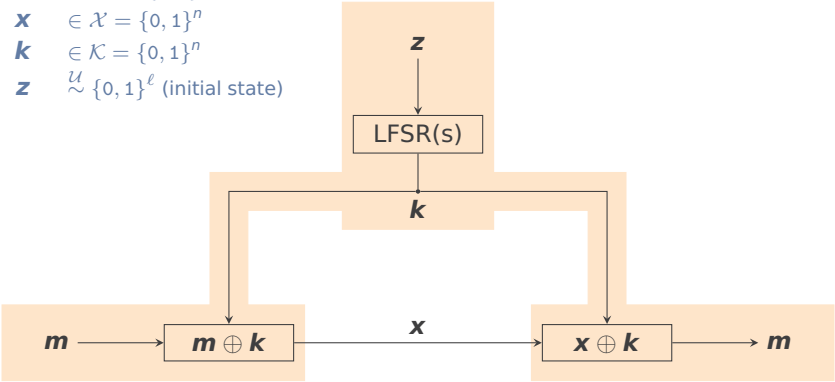

trusted area

Using a Single LFSR: Known-Plaintext Attack

Assumption: Attacker knows degree ℓ, feedback vector, and intercepted the first ℓ ciphertext bits with known plaintext.

1. Reconstruct keystream with $\boldsymbol{k} = \boldsymbol{x} \oplus \boldsymbol{m}$.
2. Find initial state of LFSR.
   - **Brute-force:** Attacker needs 2^ℓ guesses in worst-case scenario.
   - **Better attack**: Use LFSR formula to set up an equation for each $i = 0, 1, \ldots, \ell - 1$. The system of ℓ linear equations has a complexity that is cubic in ℓ.
3. The whole keystream is reconstructable.

Known plaintext attack

A single LFSR of degree ℓ can be broken in cubic complexity in ℓ if ℓ ciphertext and corresponding plaintext bits are known.

Example: Known Plaintext Attack

Feedback vector $(a_0, a_1, a_2) = (1, 1, 0)$, intercepted keystream: $k_0\, k_1\, k_2 = 1\,1\,0$

Set up a system of equations using $k_i = s_{i+3} = a_0 \cdot s_i + a_1 \cdot s_{i+1} + a_2 \cdot s_{i+2} \bmod 2$:

$$
\begin{aligned}
1 = k_0 &= \boxed{1 \cdot s_0 + 1 \cdot s_1 + 0 \cdot s_2} \bmod 2 \\
1 = k_1 &= 0 \cdot s_0 + 1 \cdot s_1 + 1 \cdot s_2 + 0 \cdot k_0 \bmod 2 \\
0 = k_2 &= 0 \cdot s_0 + 0 \cdot s_1 + 1 \cdot s_2 + \boxed{1 \cdot k_0} + 0 \cdot k_1 \bmod 2
\end{aligned}
$$

Solve for (s_0, s_1, s_2) over GF(2):

$$
\left(\begin{array}{ccc|c} 1 & 1 & 0 & 1 \\ 0 & 1 & 1 & 1 \\ 1 & 1 & 1 & 0 \end{array}\right) \xrightarrow{-} \left(\begin{array}{ccc|c} 1 & 1 & 0 & 1 \\ 0 & 1 & 1 & 1 \\ 0 & 0 & 1 & 1 \end{array}\right) \xrightarrow{-} \left(\begin{array}{ccc|c} 1 & 1 & 0 & 1 \\ 0 & 1 & 0 & 0 \\ 0 & 0 & 1 & 1 \end{array}\right) \xrightarrow{-} \left(\begin{array}{ccc|c} 1 & 0 & 0 & 1 \\ 0 & 1 & 0 & 0 \\ 0 & 0 & 1 & 1 \end{array}\right)
$$

The initial state is $(s_0, s_1, s_2) = (1, 0, 1)$.

Using a Nonlinear Combination of LFSRs

The above attack is possible because the keystream is a linear combination of previous states. To avoid this, introduce nonlinearity.

For example, with a nonlinear generator function $f : (k_i^{(1)}, \ldots, k_i^{(n)}) \mapsto k_i$

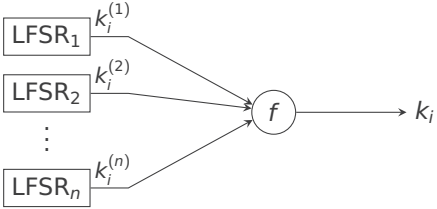

Known plaintext attack

Brute-force: Attacker needs $2^{\ell_1+\ell_2+\cdots+\ell_n}$ guesses in worst-case scenario.
Correlation attack: If the output of f is correlated with outputs of the LFSRs, the attacker can reduce the number of guesses to $2^{\ell_1} + 2^{\ell_2} + \cdots + 2^{\ell_n}$.

Example: Geffe Generator

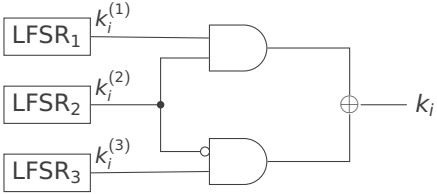

$k_i^{(1)}$	$k_i^{(2)}$	$k_i^{(3)}$	$f(\cdot)$
0	0	0	0
0	0	1	1
0	1	0	0
0	1	1	1
1	0	0	0
1	0	1	0
1	1	0	1
1	1	1	1

Correlation

The output of the generator and the output of LFSR$_3$ coincide in $p_\alpha = \frac{3}{4}$ of all possible cases.

Correlation Attack

Assumption: Attacker knows degrees ℓ_i and intercepted N ciphertext bits with known plaintext.

1. Reconstruct keystream with $\boldsymbol{k} = \boldsymbol{x} \oplus \boldsymbol{m}$.
2. Divide and conquer. Find initial state $(s_0^{(i)}, s_1^{(i)}, \ldots, s_{\ell_i-1}^{(i)})$ for each LFSR:
   - Guess an initial state $(s_0^{(i)}, s_1^{(i)}, \ldots, s_{\ell_i-1}^{(i)})$.
   - Generate the first N output bits $(k_0^{(i)}, k_1^{(i)}, \ldots, k_{N-1}^{(i)})$ of LFSR_i.
   - Compute correlation between $(k_0^{(i)}, k_1^{(i)}, \ldots, k_{N-1}^{(i)})$ and intercepted keystream $(k_0, k_1, \ldots, k_{N-1})$:
   $$\alpha = \sum_{j=0}^{N-1} (-1)^{k_j \oplus k_j^{(i)}}$$
   - If α larger than a threshold, $(s_0^{(i)}, s_1^{(i)}, \ldots, s_{\ell_i-1}^{(i)})$ is a key candidate.
3. The whole keystream is reconstructable.

Correlation Attack

Necessary plaintext bits

To distinguish the correct output sequence of LFSR_i from random output, the number N of intercepted plaintext bits needs to be large enough.
This number depends on the strength of the correlation, i, e., the probability p_α that the keystream and the output of LFSR_i coincide.

Example

A nonlinear combination of LFSRs with $p_\alpha^{(i)} = 0.52$ requires 60 000 bits of ciphertext for a successful correlation attack.

Source: Penzhorn, W. and Bruwer, C. *New Correlation Attacks on Stream Ciphers* (2002), IEEE AFRICON.

Summary

Today we have learned . . .

1. that correlation is a great enemy of the cryptographer;
2. that the attacker can (and will) use ALL possible tools;
3. that a ‘broken’ cipher is not necessarily insecure.

Syllabus

Summer Term 2026

	05.03.26	1.	Introduction, basic terminology	
	12.03.26	2.	Probability, information, and coding theory for cryptography	
	19.03.26	3.	Symmetric encryption, perfect secrecy	
Tue	24.03.26	4.	Block ciphers	HSB 9
	16.04.26	5.	Cryptanalysis of classical ciphers	
	23.04.26	6.	Number theory for cryptography	
	30.04.26	7.	Computational complexity for cryptography	
	07.05.26	8.	Asymmetric encryption	
Tue	19.05.26	9.	Message authentication	HSB 9
	28.05.26	10.	Elliptic curve cryptography	
	11.06.26	11.	Commitments, zero-knowledge, and secret sharing	
Tue	23.06.26	12.	Q & A for the exam	HSB 9
	25.06.26		**Written exam**	

Last update: April 16, 2026