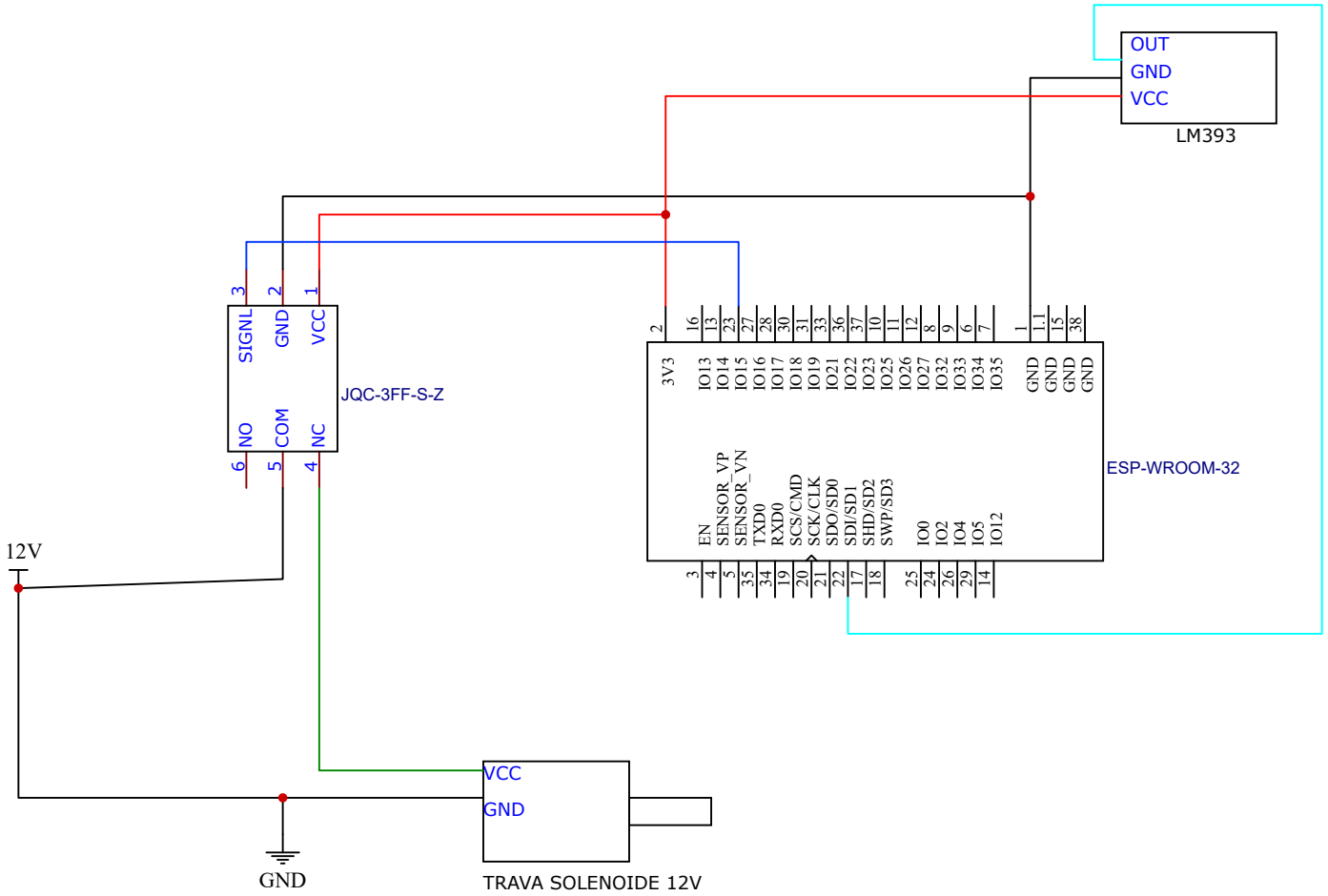

TITLE: TRAVA ELETRICA COM SENSOR		REV: 1.0
	Company: IFPB CG	Sheet: 1/1
	Date: 24/08/2022 Drawn By: Grupo 3	