Journal of Discrete Mathematical Sciences and Cryptography

ISSN: (Print) (Online) Journal homepage: https://www.tandfonline.com/loi/tdmc20

Incept_LSTM : Accession for human activity concession in automatic surveillance

Palak Girdhar , Prashant Johri & Deepali Virmani

To cite this article: Palak Girdhar , Prashant Johri & Deepali Virmani (2020): Incept_LSTM : Accession for human activity concession in automatic surveillance, Journal of Discrete Mathematical Sciences and Cryptography, DOI: 10.1080/09720529.2020.1804132

To link to this article: https://doi.org/10.1080/09720529.2020.1804132

Published online: 09 Sep 2020.

Submit your article to this journal

View related articles

View Crossmark data

Full Terms & Conditions of access and use can be found at
https://www.tandfonline.com/action/journalInformation?journalCode=tdmc20

Journal of Discrete Mathematical Sciences & Cryptography
ISSN 0972-0529 (Print), ISSN 2169-0065 (Online)
DOI : 10.1080/09720529.2020.1804132

Incept_LSTM : Accession for human activity concession in automatic surveillance

Palak Girdhar *
School of Computer Science & Engineering
Galgotias University
Greater Noida 203201
Uttar Pradesh
India

and

Department of Computer Science & Engineering
Bhagwan Parshuram Institute of Technology
Sector 17, Rohini
Delhi 110089
India

Prashant Johri †
School of Computer Science & Engineering
Galgotias University
Greater Noida 203201
Uttar Pradesh
India

Deepali Virmani §
Department of Computer Science & Engineering
Bhagwan Parshuram Institute of Technology
Sector 17, Rohini
Delhi 110089
India

*E-mail: palakgirdhar@bpitindia.com (Corresponding Author)
†E-mail: prashant.johri@galgotiasuniversity.edu
§E-mail: deepalivirmani@bpitindia.com

© Taru Publications

Abstract

Automatic monitoring is increasingly being used today, as it helps to detect various unforeseen events that may cause threat. To provide basic classification data, the surveillance operation is monitored via sensors and cameras. Any unfair situation / person / event is a complex activity to detect. It includes various external as well as internal factors such as: context environment, gestures of the person – movement of the body and the hand, muscle strain, personal identity and demography. Automatic testing uses certain variables for identification in literature .In this paper, Incept_LSTM used for video surveillance using deep learning method called Inception-based LSTM for Human Activity Recognition (HAR). The proposed system aims at improving the system performance by monitoring human activities closely. The approach proposed is using Inception v3 as a deep learning model for extraction of the features. And other unit, LSTM is used to capture the temporal or time series data. The training and evaluation data was empirically tested with an accuracy of 91 per cent on UCF crime dataset.

Subject Classification: *68U10.*

Keywords: *Face recognition, Human activity recognition, Deep learning, Behavioral analysis.*

1. Introduction

Human Activity Recognition [1][3][4][5] plays an important role in human-human interaction as well as in human- computer interaction. It is gaining more popularity in the field of computer vision [6,7]. It aims to recognize human's activities in a time series domain in an unconstraint environment. Temporal Correlation between frames (of images) gives additional information of motion. To understand the correlation, one needs to focus on video(s) input. But, it demands more computational requirement. Since, video(s) contains hundreds or thousands of image frames to be processed individually for the better understanding of human activities. Monitoring of these activities can be further analyzed to understand human behavior [6].

The motivation behind the proposed work is to focus to identify unusual/abnormal/suspicious activities poses by human being. Suspicious human activity detection from video surveillance system is gaining more popularity in public as well as indoor places [7]. It involves recognition of human activities and classifies them into usual/normal or unusual/abnormal activity. Normal activities are the actions which person posses in his daily routine like walking, jogging, handshaking with other people etc. whereas abnormal or unusual activities are like fight, theft, riots, attack, leaving explosive baggage etc. A human operator cannot monitor such activity for a longer time due to fatigue issue; it could lead to the occurrence of dangerous situations [7]. This leads to a dire need

for developing an automated surveillance system which can monitor such activities automatically. The important chore of an automated surveillance system is to capture and monitor video frames from the cameras mounted at different locations. Further, to identify any unusual activities happening in sensitive areas. Unusual activity can be dangerous for other person(s), so it is required to monitor these activities and recognize such involved human beings, so that necessary action can be taken. In the design of an automated surveillance system following general step procedure have been used in the literature [6,7,9].

Step 1 : Foreground Object detection the process of object detection involves background modeling [8]. Background modeling is an efficient way to detect foreground object. Through motion segmentation [8], motion of the object can be identified. It mainly focuses on those regions where there is a moving object like any person, vehicle or animals. Detection of such regions gives insight for further processing. The proposed system is formed to analyze the suspicious person involved in any mischievous activities, so the main concern will be to locate the human being only.

Step 2 : Object Classification is the mechanism to differentiate the objects present in the video [10]. It helps to locate the presence of a human being. There are different methods available to classify the images in multiple Classes.

Step 3 : Object Tracking is the method to track human being. It helps in generating the trajectory of an object in consecutive frames [9, 10]. Also, returns the location of the tracked/desired object in each frame.

In this paper, a hybrid of Inception [14] and LSTM [27] [28] is proposed for automated surveillance system. The aim of the proposed method is to monitor the human activity closely, so that the behavior of the person is analyzed.

Inception network is used for the feature extraction and classification purpose. Inception is a dense network which gives the liberty of varying kernel size while performing classification. And LSTM is a RNN model which performs well on temporal data. The results so obtained have outperformed the work already done in literature.

The remainder of the paper is organized as: Section 2 describes the motivation behind the proposed work. Section 3 provides a brief review of related work. Section 4 describes the proposed methodology for recognition of human activity. Results and Analysis are given in Section 5. Section 6 discusses the conclusion and future scope of the work.

2. Motivation

Video-based surveillance has proven itself in the decreasing rate of crime as well as helps in compiling the valuable shreds of evidence after the incidence. The need for an automated visual surveillance system is to detect and recognize certain people who are involved in any unsocial activities. Tracking of such people can be done via processing of CCTV videos (image sequence) present in that vicinity. Further, it is required to understand the behavior of people and to determine whether the behavior of involved person is usual or unusual. Behavior understanding is to analyze and recognize person's involvement in different interactions as well as actions [6].

Existing work often use machine learning methods for the manual extraction of features pertaining to different motions. However, traditional feature engineering methods are getting incapable of extracting complex motions of the human(s).

In this paper, to improve effectiveness of the surveillance system, deep learning techniques have been incorporated in Incept_LSTM. For human activity recognition, complex features are extracted via Inception V3. It is known to be a best classification method in the area of image recognition. And further, to understand the motion, LSTM method is used. Therefore, to improve the classification result as well as to deal with temporal data, both the individual methods are combined sequentially. The proposed method can be further used in for behavioral understanding of the person.

3. Related work

Deep learning has dominated in the field of computer vision. It has shown a rapid progress in the field of image detection, classification and recognition. It can be seen as a result of AlexNet[11], VGG[12], ResNet [13], GoogleNet[14]. GoogleNet uses inception network, which is evolved as a major breakthrough in the area of image classification. In the literature, researchers have combined the features of two or more techniques to acquire better accuracies. Fusion of two or more methods can be performed sequentially, at decision level or at feature level. Authors of [15] proposed a method- based on CNN and DBN for feature extraction purpose in object recognition task. Authors of [16] used fusion strategy. They used EEG data for the cognitive study of the human being. Data from multiple EEGs are collected and authors used deep learning techniques to learn the necessary features from the EEG samples. In [17]

Authors proposed multimodal system for concurrent activity recognition. For this purpose, they used CNN and LSTM. In [18] a hybrid approach is proposed that learns spatial features from CNN and map their temporal relationship with LSTM and proved that the accuracy is much better than single stream methods. In [19] authors integrate temporal segments of ConvNet and LSTM. Authors of [20] introduce activity recognition method considering worker's activities. In the proposed model, videos are taken as input to monitor continuous activity labels for individual worker. Spatial and temporal streams are generated from the input video. Author proposed a fusion of Convolutional networks with spatial and temporal streams individually and finally results are fused at clip level. In [21] authors proposed a skeleton based model named M-GC-LSTM for activity recognition of human. Authors used GCN for spatial information extraction. They used concept of sub graphs for extracting multi scale body part features. Further temporal multiscale LSTM with attention gates was designed to capture temporal dynamics. In [22] a hierarchical statistical method for recognition of human activity is proposed. At first step, author used deep action recognition methods for recognizing human activities and at step 2, Bayesian nonparametric hidden semi-Markov model was used to capture the worker's activities. In [23] a hybrid model Long-term Recurrent Convolutional Networks (LRCNs), is proposed. Authors used CNN and LSTM for extraction of features and to learn and recognize the actions respectively. In [24] IRRCNN model is proposed, that is a hybrid of Recurent Residual Convolutional Neural Network(RCNN) and Inception network to improve the recognition accuracy. An unsupervised inception based LSTM approach has been proposed. Authors proved that LSTM outperforms the convolutional LSTM [25]. In [26] authors proposed a generic framework based on Convolutional and LSTM for activity recognition.

4. Proposed Methodology

In this section, the complete framework of the proposed method is explained. Various test and train settings are discussed with an insight to the building blocks of the proposed work, titled, Incept_LSTM. The building blocks are inception network and LSTM used for classifying images for an automated surveillance system. Further, in subsection 4.1 Need and why inception networks have been used is discussed. In 4.2 need of using LSTM and In 4.3 a hybrid of both have been discussed.

4.1 *Need of Inception network*

AlexNet[11]is the first deep network which raised the classification accuracy to a great stride on ImageNet as compared to existing methods. It has 5 convolutional layers and 3 fully connected layers after that. VGG shows improvement over AlexNet by replacing large kernel size filter to multiples of 3x3 filters one after another. Due to its huge size, large memory and large computational requirements it became inefficient to use. GoogleNet [14] builds on the idea that most of the activations in a deep network are have zero or redundant values. Also found that a very less number of neurons were effective for the generation of results. Therefore it focused to have sparse connection rather than a deeper one. Hence, there is a GoogleNet module known as Inception came into existence that approximates a sparse CNN.

Structure

The Inception architecture [14] has the following components:

- An average pooling layer with 5×5 filter size and with a stride of 3.
- A 1×1 layer with 128 filters for dimension reduction and rectified linear activation.
- A fully connected layer with 1024 units and rectified linear activation.
- A dropout layer
- Softmax layer as a classifier

4.2 *Long Short Term Memory* (*LSTM*)

LSTM is powerful and well known type of recurrent neural network which is capable of learning patterns and most suitable for sequence prediction problems. Architecture of LSTM was proposed in [27]. LSTM network has feedback connection therefore well suited to learn from experience. It cannot only work for single data points (image), rather it works on the complete sequence (videos). Figure 1 [27] shows the basic LSTM cell. The LSTM cell has a linear unit with self recurrent connection, input, output and forget gate. The self-recurrent connection has a weight of 1.0 and it guarantees that the state of the cell remains stable from one time step to other. Also ensures that no outside interference is permitted. Other gates present keeps track of the in and out flow of the information. Forget gate keeps check on the cell state. The information which is no longer is required by the cell is removed by the forget gate. LSTM network is most

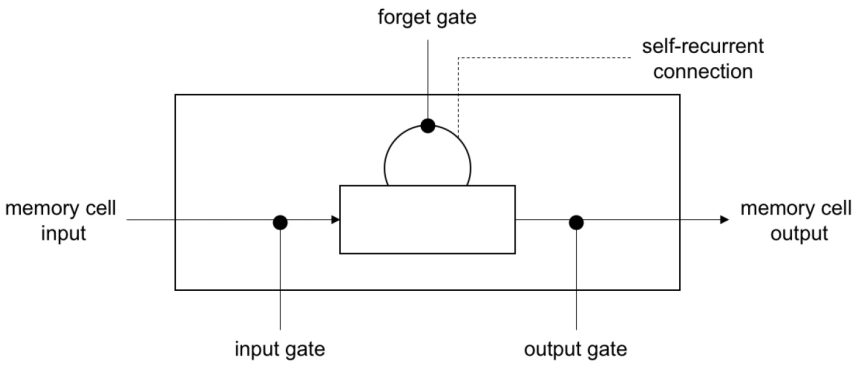

Figure 1
A LSTM Memory Cell

suitable for time series data, where there is a lag in between important events and also it deals with gradient vanishing problem.

Each cell's and gate's state is represented by multiplicative equations that are:

$$i_t = \sigma(W_{xi}\, x_t + W_{hi}\, h_{t-1} + W_{ci} c_{t-1} + b_i) \tag{1}$$

$$f_t = \sigma(W_{xf}\, x_t + W_{hf}\, h_{t-1} + W_{cf} c_{t-1} + b_f) \tag{2}$$

$$o_t = \sigma(W_{xo}\, x_t + W_{ho}\, h_{t-1} + W_{co} c_{t-1} + b_o) \tag{3}$$

$$c_t = (f_t\, c_{t-1} + i_t \tanh(w_{xc}\, x_t + w_{hc}\, h_{t-1} + b_c)) \tag{4}$$

$$h_t = o_t \tanh c_t \tag{5}$$

W is the weight matrix, x is the input, σ is sigmoid and tanh is the hyberbolic tangent activation function. The letter i,f,o used for the respective gates and c is used for memory cell.

4.3 *A Hybrid of Inception v3 with LSTM*

Existing works [3][4][11][12][29][30] mainly use CNN, RNN or combination of two. Both the networks have their own advantages and limitations. RNNs perform well on time series data, but it is not suitable for extracting high level features. Whereas, CNNs are known to be efficient at extracting complex features but do not work well on sequential data. The reason for using this architecture is mainly because of two reasons. The

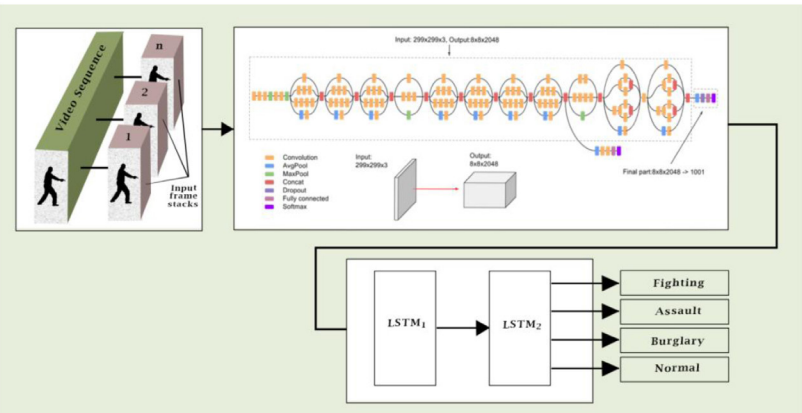

Figure 2

Proposed Architecture (Incept_LSTM)

use of pre trained inception v3 gives a liberty of varying filter size option which is an advantage in recognizing the activities. The second module-LSTM is known to be best for keeping tracks of sequence in case of videos. To improve the classification results, two best known methods results are combined sequentially. Figure 2 represents the complete architecture and shows the flow of information. The Proposed architecture Incept_LSTM uses inception network and LSTM. Inception network is a pre trained model, which was trained on large dataset for image classification task. It is a CNN model used for the complex feature extraction. The result is passed to the stacked LSTM. Two units of LSTMs are placed one over another. The purpose of LSTM unit is to focus on the temporal information present in the data. And the other unit is placed for increasing the accuracy of the model. By placing more units makes the model deeper and more accurate towards the sequential results.

The proposed model can be further used for the analysis of behavioral study of the person. From the observed activities, a person's usual or unusual behavior can be analyzed which can be an advantageous for surveillance systems, student activities monitoring etc [32].

5. Experimental Results

5.1 *Dataset Used*

Incept_LSTM has been tested on publically available UCF crime dataset [31]. Table1 shows the attributes of the dataset. The publically

Figure 3

Dataset Sample Images

available UCF-crime dataset is a labeled dataset which consists of 13 human based anomalous categories. Incept_LSTM has been evaluated on 4 among 13 categories: Assault, Burglary, Fighting, and Normal. 500 images per category has been selected for the training purpose.16 frames per image are extracted resulting in 500x16=8000 frames per category. After getting a video sequence, frames have been extracted and those 16 frames are stored in a continuous sequence for a single image. Now, each image is consists of 16 frames and size of each frame is 128x128. Therefore, size of the one image comes out to be 2048x128.

5.2 *Evaluation Measures*

The proposed Incept_LSTM model is evaluated on pre existing evaluation techniques. The evaluation measures considered are: Accuracy, Confusion and F1-score. F1- score is used to measure the fairness and consistency of the results.

5.3 *Results*

Incept_LSTM has been tested on publically available UCF-crime dataset. The model is validated on 50 epochs with 91% validation accuracy.

Table 1

Incept_LSTM Results

Dataset	Epochs	Learning rate	Optimizer	Max. Validation accuracy (%)	Min. Validation Loss (%)	Activation Function	No. of output classes
UCF Crime dataset	50	0.001	SGD	91	0.33	Softmax	4

Table 2

Accuracy comparison of the proposed method with existing methods

Evaluation Metric	Method 1 (LSTM Ensemble) [26]	Method 2 (Two-stream convolutional networks [20]	Proposed Method (Incept_ LSTM)
Year	2017	2018	2020
Accuracy	72% (opportunity dataset) 85% (PAMAP2 dataset) 92% (Skoda dataset)	80.5% (own dataset)	91% (UCF Crime Dataset)

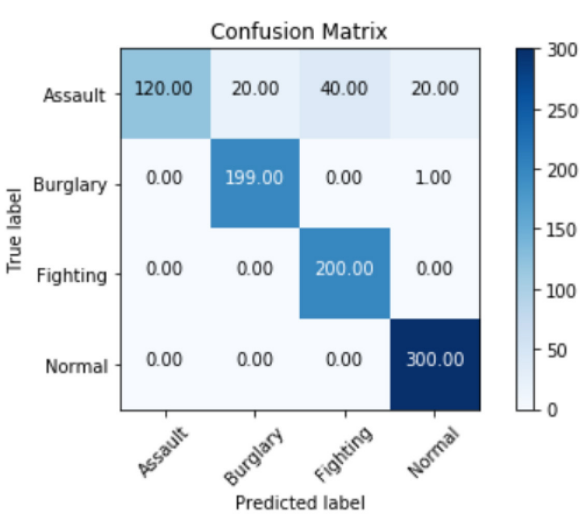

Figure 4

Confusion matrix of action recognition using Incept_LSTM

Table 3

F1-Score Comparison of Incept_LSTM with existing work

Methods	F1-Score
LSTM Ensemble[26], 2017	0.61
Proposed Method(Incept_LSTM), 2020	0.89

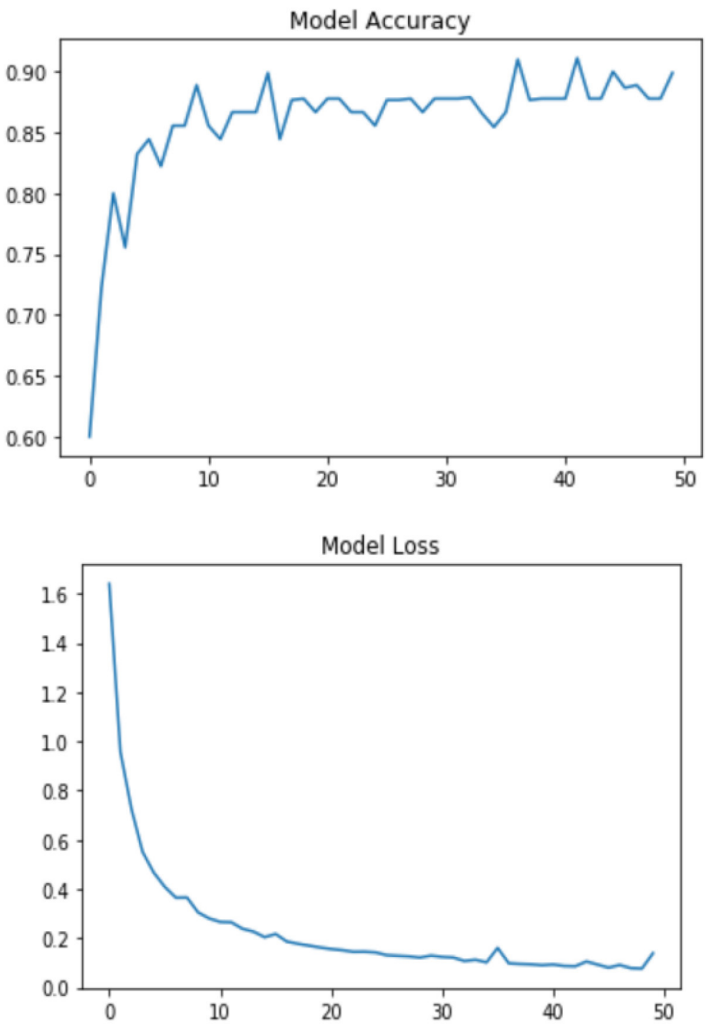

Figure 5

Model Accuracy and Loss

6. Conclusion and Future Scope

In the proposed model, Incept_LSTM, Inception is used. It is a pre-trained CNN model which can classify the given object in thousand numbers of classes. Though Inception is a complex network but gives a great performance in terms of accuracy. It is a deep learning based method used for complex feature extraction. In the proposed architecture, Intermediate results are passed to the stacked LSTMs. The purpose of stacking LSTM is to make model deeper and more accurate. First LSTM unit is used for capturing the temporal information and other unit is for increasing the accuracy. Incept_LSTM can be used for complex activity recognition of human. The experimental working of the model has been verified on publically available UCF crime dataset.

Incept_LSTM is compared with the methods present in the literature. The empirical results are also verified by F1-score.The resultant F1 score and the accuracy of Incept_LSTM are 0.89 and 91% respectively Model is tested on publically available UCF Crime dataset.

The proposed model can be further used to identify the suspected or non-suspected person in various domains like in surveillance, behavior understanding etc. Human Activity is not the only method for the analysis of a person's behavior. In many real world situations, it is required to identify suspicious events before it happens, for necessary measures to be taken beforehand. For in-depth behavior understanding, Incept_LSTM can be investigated more deeply with emotion recognition. This is beneficial because face expression, body movement, eye movement and gestures also reflect a person's state of mind.

References

[1] Simonyan, K. and Zisserman, A., 2014. Two-stream convolutional networks for action recognition in videos.In *Advances in neural information processing systems* (pp. 568-576).

[2] Yue-Hei Ng, J., Hausknecht, M., Vijayanarasimhan, S., Vinyals, O., Monga, R. and Toderici, G., 2015. Beyond short snippets: Deep networks for video classification. In *Proceedings of the IEEE conference on computer vision and pattern recognition* (pp. 4694-4702).

[3] Feichtenhofer, C., Pinz, A. and Zisserman, A., 2016. Convolutional two-stream network fusion for video action recognition.In *Proceedings of the IEEE conference on computer vision and pattern recognition* (pp. 1933-1941).

[4] Sun, L., Jia, K., Yeung, D.Y. and Shi, B.E., 2015. Human action recognition using factorized spatio-temporal convolutional networks.In *Proceedings of the IEEE international conference on computer vision* (pp. 4597-4605).

[5] Franco, A., Magnani, A. and Maio, D., 2020. A multimodal approach for human activity recognition based on skeleton and RGB data. *Pattern Recognition Letters*.

[6] Vishwakarma, S. and Agrawal, A., 2013. A survey on activity recognition and behavior understanding in video surveillance. *The Visual Computer*, *29*(10), pp.983-1009.

[7] Tripathi, R.K., Jalal, A.S. and Agrawal, S.C., 2018. Suspicious human activity recognition: a review. *Artificial Intelligence Review*, *50*(2), pp.283-339.

[8] Bouwmans, T., 2014. Traditional and recent approaches in background modeling for foreground detection: An overview. *Computer science review*, *11*, pp.31-66.

[9] Rudenko, A., Palmieri, L., Herman, M., Kitani, K.M., Gavrila, D.M. and Arras, K.O., 2019. Human motion trajectory prediction: A survey. *arXiv preprint arXiv:1905.06113*.

[10] Javed, O. and Shah, M., 2002, May. Tracking and object classification for automated surveillance. In *European Conference on Computer Vision* (pp. 343-357).Springer, Berlin, Heidelberg.

[11] Krizhevsky, A., Sutskever, I. and Hinton, G.E., 2012. Imagenet classification with deep convolutional neural networks.In *Advances in neural information processing systems* (pp. 1097-1105).

[12] Simonyan, K. and Zisserman, A., 2014. Very deep convolutional networks for large-scale image recognition. *arXiv preprint arXiv:1409.1556*.

[13] Zagoruyko, Sergey, and Nikos Komodakis. "Wide residual networks." *arXiv preprint arXiv:1605.07146* (2016).

[14] Szegedy, C., Liu, W., Jia, Y., Sermanet, P., Reed, S., Anguelov, D., Erhan, D., Vanhoucke, V. and Rabinovich, A., 2015. Going deeper with convolutions.In *Proceedings of the IEEE conference on computer vision and pattern recognition* (pp. 1-9).

[15] Gao, J., Yang, J., Wang, G. and Li, M., 2016. A novel feature extraction method for scene recognition based on centered convolutional restricted Boltzmann machines. *Neurocomputing*, *214*, pp.708-717.

[16] Sarkar, S., Reddy, K., Dorgan, A., Fidopiastis, C. and Giering, M., 2016. Wearable EEG-based activity recognition in PHM-related service environment via deep learning. *Int. J. Progn. Health Manag*, *7*, pp.1-10.

[17] Guan, Y. and Plötz, T., 2017. Ensembles of deep lstm learners for activity recognition using wearables. *Proceedings of the ACM on Interactive, Mobile, Wearable and Ubiquitous Technologies*, *1*(2), pp.1-28

[18] Gammulle, H., Denman, S., Sridharan, S. and Fookes, C., 2017, March. Two stream lstm: A deep fusion framework for human action recognition. In *2017 IEEE Winter Conference on Applications of Computer Vision (WACV)* (pp. 177-186).IEEE.

[19] Ma, C.Y., Chen, M.H., Kira, Z. and AlRegib, G., 2019. TS-LSTM and temporal-inception: Exploiting spatiotemporal dynamics for activity recognition. *Signal Processing: Image Communication*, *71*, pp.76-87.

[20] Luo, X., Li, H., Cao, D., Yu, Y., Yang, X. and Huang, T., 2018. Towards efficient and objective work sampling: Recognizing workers' activities in site surveillance videos with two-stream convolutional networks. *Automation in Construction*, *94*, pp.360-370.

[21] Yang, K., Ding, X. and Chen, W., 2019, October. Multi-Scale Spatial Temporal Graph Convolutional LSTM Network for Skeleton-Based Human Action Recognition. In *Proceedings of the 2019 International Conference on Video, Signal and Image Processing* (pp. 3-9).

[22] Luo, X., Li, H., Yang, X., Yu, Y. and Cao, D., 2019. Capturing and Understanding Workers' Activities in Far-Field Surveillance Videos with Deep Action Recognition and Bayesian Nonparametric Learning. *Computer-Aided Civil and Infrastructure Engineering*, *34*(4), pp.333-351.

[23] Donahue, J., Anne Hendricks, L., Guadarrama, S., Rohrbach, M., Venugopalan, S., Saenko, K. and Darrell, T., 2015. Long-term recurrent convolutional networks for visual recognition and description. In *Proceedings of the IEEE conference on computer vision and pattern recognition* (pp. 2625-2634).

[24] Alom, M.Z., Hasan, M., Yakopcic, C., Taha, T.M. and Asari, V.K., 2018. Improved inception-residual convolutional neural network for object recognition. *Neural Computing and Applications*, pp.1-15.

[25] Hosseini, M., Maida, A.S., Hosseini, M. and Raju, G., 2019. Inception-inspired LSTM for Next-frame Video Prediction. *arXiv preprint arXiv:1909.05622*.

[26] Ordóñez, F.J. and Roggen, D., 2016. Deep convolutional and lstm recurrent neural networks for multimodal wearable activity recognition. *Sensors*, *16*(1), p.115.

[27] Hochreiter, S. and Schmidhuber, J., 1997. Long short-term memory. *Neural computation*, *9*(8), pp.1735-1780.

[28] Chen, Y., Zhong, K., Zhang, J., Sun, Q. and Zhao, X., 2016, January. Lstm networks for mobile human activity recognition. In *2016 International Conference on Artificial Intelligence: Technologies and Applications*. Atlantis Press.

[29] Herath, S., Harandi, M. and Porikli, F., 2017. Going deeper into action recognition: A survey. *Image and vision computing*, *60*, pp.4-21.

[30] Singh, D., Merdivan, E., Psychoula, I., Kropf, J., Hanke, S., Geist, M. and Holzinger, A., 2017, August. Human activity recognition using recurrent neural networks.In *International Cross-Domain Conference for Machine Learning and Knowledge Extraction* (pp. 267-274).Springer, Cham.

[31] Landi, F., Snoek, C.G. and Cucchiara, R., 2019. Anomaly Locality in Video Surveillance. *arXiv preprint arXiv:1901.10364*.

[32] Girdhar, P., Virmani, D. and Saravana Kumar, S., 2019. A hybrid fuzzy framework for face detection and recognition using behavioral traits. *Journal of Statistics and Management Systems*, *22*(2), pp.271-287.