ABLUTION RETAIL BLOCK

SWITCHES	QTYS	POWER SOCKETS	QTYS	LIGHTS	QTYS	OTHERS	QTYS
1lever ,1 Way Switch @ 1200mm above FFL.		16A Single Switched Socket @300mm above FFL.		600 x 1200 Recessed 3 x 18W LED fluorescent light		Distribution Board	
2 lever,1 Way Switch @ 1200mm above FFL.		16A Double Switched Socket @300mm above FFL.		6W LED downlight white colour		50L Geyser	
Day/night switch @ 2000mm Abone FFL.		16A Single Switched Socket @1100mm above FFL.		30W LED flood light		Air Conditioning Unit	
30A Isolator Switch@ 2000mm above FFL.		16A Double Switched Socket @1100mm above FFL.		2x18W double vapor proof fluorescent light		Kiosk	1
20A Isolator Switch@ 2000mm above FFL.				2x18W double prismatic LED fluorescent light			
				Outdoor pole light 2300mm, 40W E5	22		

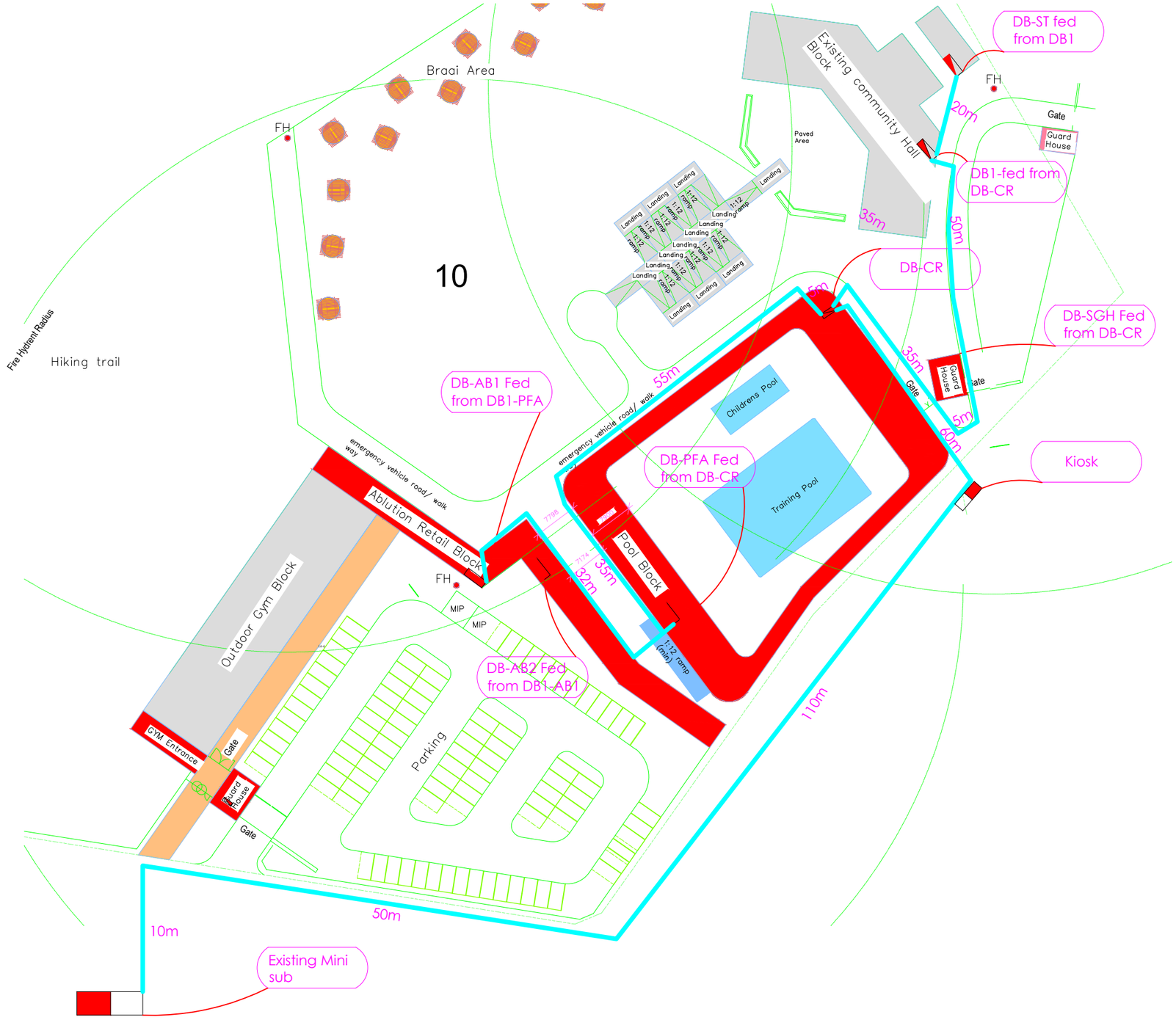

RA	WD-OL-01

Notes:

- OHS Act 85 of 1993: Environmental Regulation for workplace
- Standard : SANS 10142-1

REVISIONS

No	DATE	CHECKED	APPROVED	DESCRIPTION

NUMBER	TITLE
REFERENCE DRAWINGS	

CONSULTANT:
CHONAMALANGA ENGINEERING
CHONA-MALANGA ENGINEERING
123 HENDRICK VAN ECK,BLVD
VANDERBIJLPARK, GAUTENG,1911
TEL: 072 746 1080
E-MAIL:Info@chona-malanga.co.za

CONTRACT:		NAME: MW(Tics) Selebano Pr. Eng
DRAWN BY:		Pr. Eng. No.: 20120248
TRACED BY:	HERVE MBIKAYI	SIGNATURE:
	28-02-2025	DATE: 28-02-2025

DESCRIPTION: THE UPGRADING OF WEDELA RECREATIONAL CLUB

PART: OUTSIDE LIGHTS

SAP PROJECT No.:		CHECKED BY:	
NETWORK ID No.:		ACCEPTED BY	
CONTRACT:		DATE:	

CLIENT:
KABE MOTIVATED FOR SUCCESS
KABE CONSULTING ENGINEERS
218 Dr VANDER MERWE DRIVE
MONTANA PARK
TEL: 087 809 0982
E-MAIL:Info@kabe.co.za

STATION | WKS | DOC. TYPE | S

SCALE: N.T.S.

RA	WD-OL-01	REVISION A

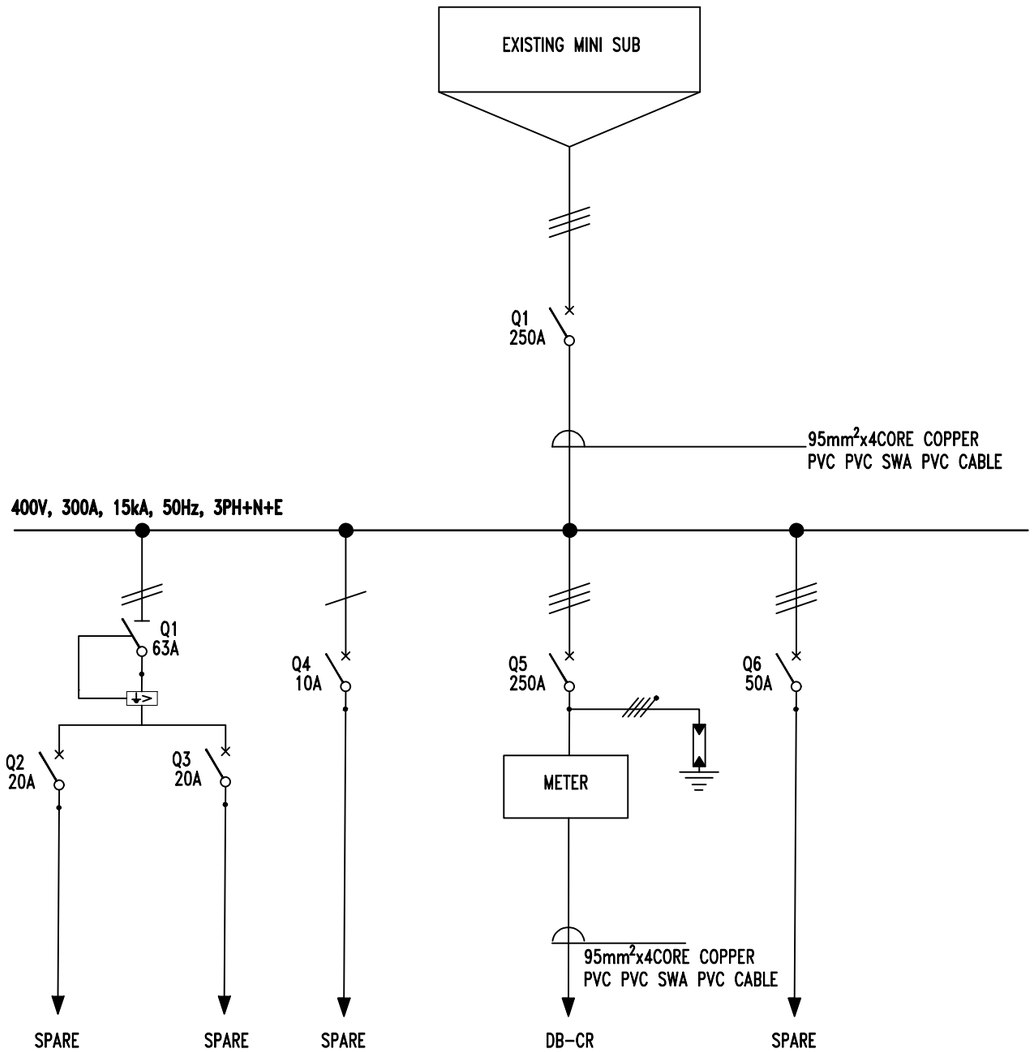

RA	WD-KIOSK-01-SLD

Notes:

- OHS Act 85 of 1993: Environmental Regulation for workplace
- Standard : SANS 10142-1

REVISIONS

No	DATE	CHECKED	APPROVED	DESCRIPTION

NUMBER	TITLE
	REFERENCE DRAWINGS

CONSULTANT:

CHONA-MALANGA ENGINEERING
123 HENDRICK VAN ECK,BLVD
VANDERBIJLPARK, GAUTENG,1911
TEL: 072 746 1080
E-MAIL:info@chona-malanga.co.za

CONTRACT:		NAME: MW(Tics) Selebano Pr. Eng Pr. Eng. No.: 20120248
DRAWN BY:		SIGNATURE:
TRACED BY:	HERVE MBIKAYI	DATE: 10-04-2025
	10-04-2025	

DESCRIPTION: THE UPGRADING OF WEDELA RECREATIONAL CLUB

PART: KIOSK

SAP PROJECT No.:		CHECKED BY:	
NETWORK ID No.:		ACCEPTED BY:	
CONTRACT:		DATE:	

CLIENT:

KABE CONSULTING ENGINEERS
218 Dr VANDER MERWE DRIVE
MONTANA PARK
TEL: 087 809 0982
E-MAIL:info@kabe.co.za

STATION	WKS	DOC. TYPE	S

SCALE: N.T.S.

RA	WD-KIOSK-01-SLD	REVISION A

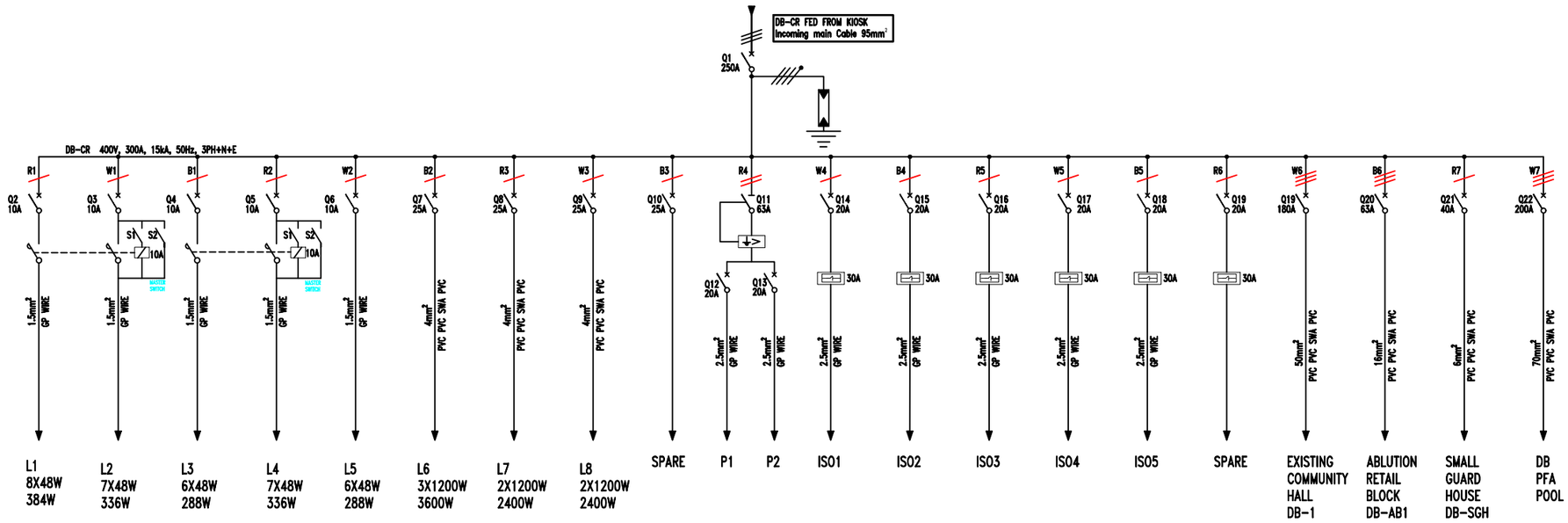

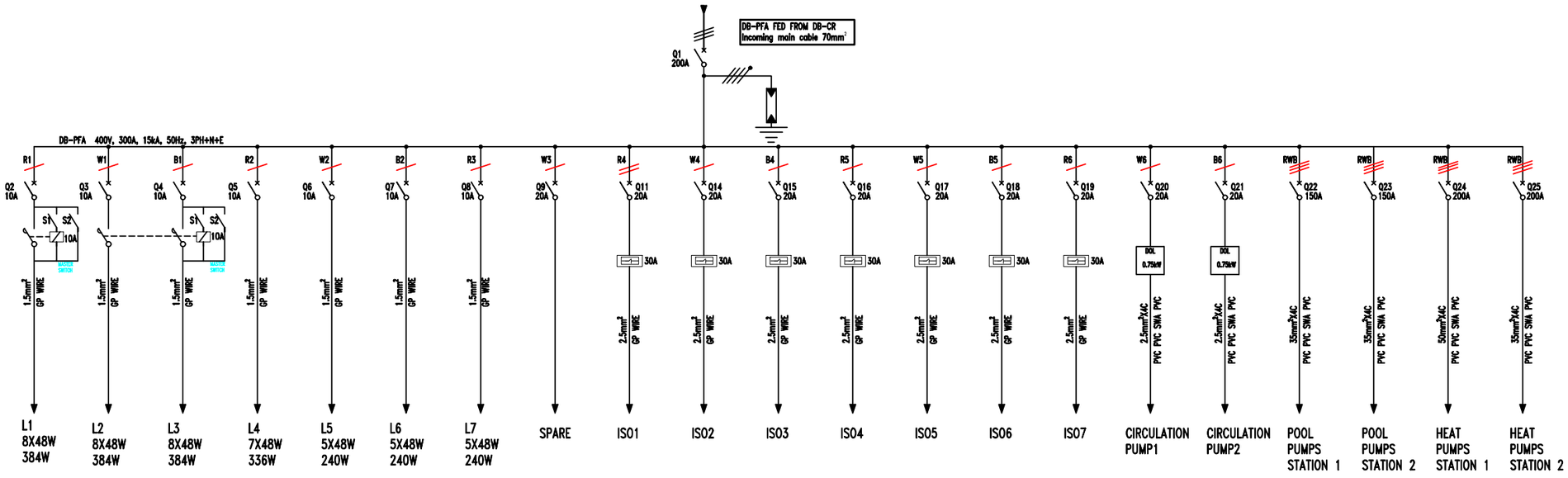

RA	WD-PB-01-SLD

Notes:

- OHS Act 85 of 1993: Environmental Regulation for workplace
- Standard : SANS 10142-1

REVISIONS

No	DATE	CHECKED	APPROVED	DESCRIPTION

NUMBER	TITLE
	REFERENCE DRAWINGS

CONSULTANT:
CHONAMALANGA ENGINEERING
CHONA-MALANGA ENGINEERING
123 HENDRICK VAN ECK,BLVD
VANDERBIJLPARK, GAUTENG,1911
TEL: 072 746 1080
E-MAIL:info@chona-malanga.co.za

CONTRACT:		NAME: MW(Tics) Selebano Pr. Eng Pr. Eng. No.: 20120248
DRAWN BY:		SIGNATURE:
TRACED BY:	HERVE MBIKAYI 28-02-2025	DATE: 28-02-2025

DESCRIPTION: THE UPGRADING OF WEDELA RECREATIONAL CLUB

PART: POOL BLOCK

SAP PROJECT No.:		CHECKED BY:	
NETWORK ID No.:		ACCEPTED BY	
CONTRACT:		DATE:	

CLIENT:
KABE MOTIVATED FOR SUCCESS
KABE CONSULTING ENGINEERS
218 Dr VANDER MERWE DRIVE
MONTANA PARK
TEL: 087 809 0982
E-MAIL:info@kabe.co.za

STATION	WKS	DOC. TYPE	S

SCALE: N.T.S.

RA	WD-PB-01-SLD	REVISION A

POOL PUMPS STATION

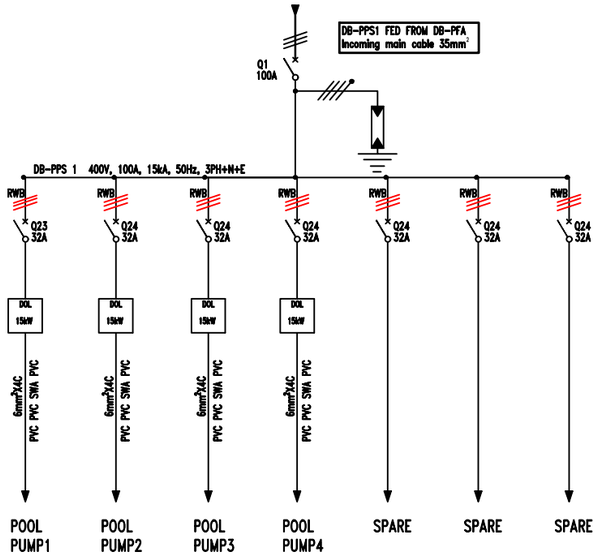

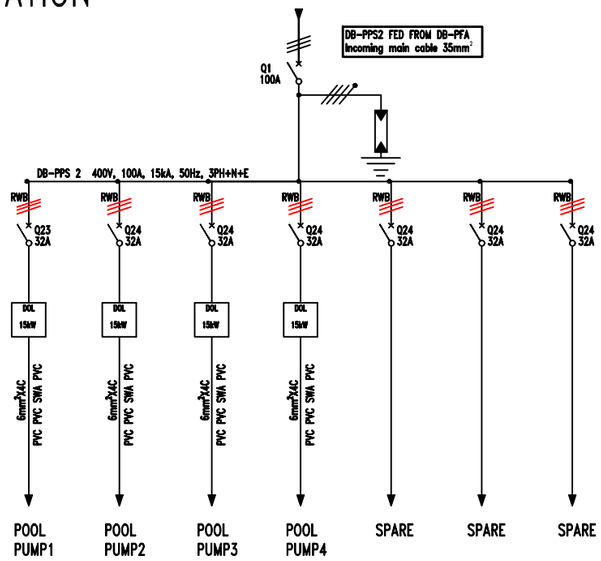

HEAT PUMPS STATION

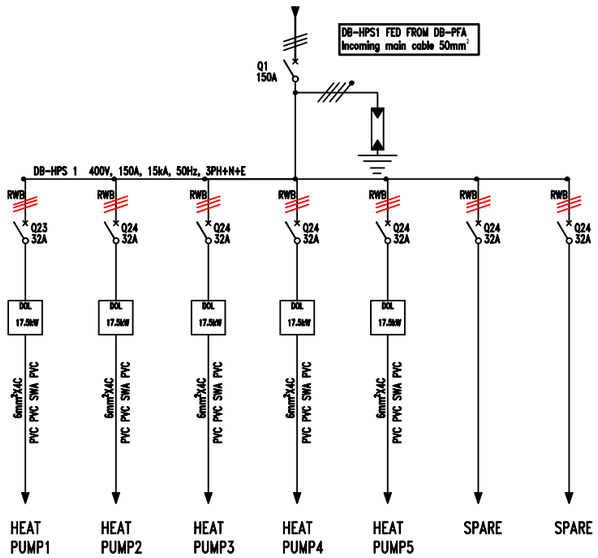

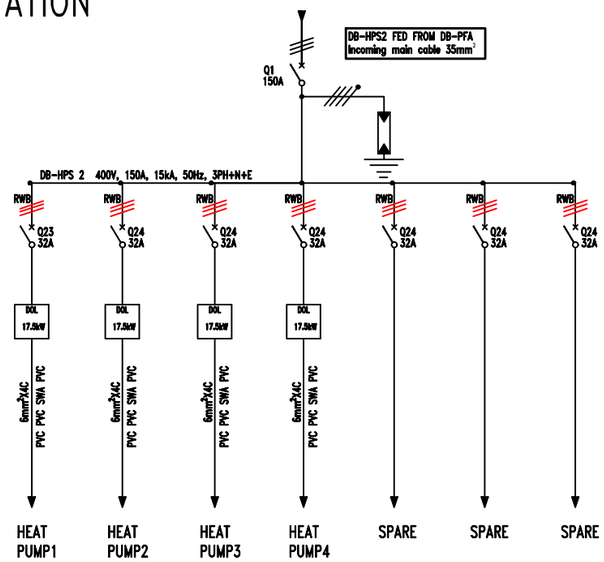

RA	WD-PB-01-SLD

Notes:

- OHS Act 85 of 1993: Environmental Regulation for workplace
- Standard : SANS 10142-1

REVISIONS

No	DATE	CHECKED	APPROVED	DESCRIPTION

NUMBER	TITLE
REFERENCE DRAWINGS	

CONSULTANT:
CHONAMALANGA ENGINEERING
CHONA-MALANGA ENGINEERING
123 HENDRICK VAN ECK,BLVD
VANDERBIJLPARK, GAUTENG,1911
TEL: 072 746 1080
E-MAIL:Info@chona-malanga.co.za

CONTRACT:		NAME: MW(Tics) Selebano Pr. Eng	
DRAWN BY:		Pr. Eng. No.: 20120248	
TRACED BY:	HERVE MBIKAYI	SIGNATURE:	
	28-02-2025	DATE:	28-02-2025

DESCRIPTION: THE UPGRADING OF WEDELA RECREATIONAL CLUB

PART: POOL BLOCK

SAP PROJECT No.:		CHECKED BY:	
NETWORK ID No.:		ACCEPTED BY	
CONTRACT:		DATE:	

CLIENT:
KABE MOTIVATED FOR SUCCESS
KABE CONSULTING ENGINEERS
218 Dr VANDER MERWE DRIVE
MONTANA PARK
TEL: 087 809 0982
E-MAIL:Info@kabe.co.za

STATION	WKS	DOC. TYPE	S

SCALE: N.T.S.

RA	WD-PB-01-SLD	REVISION A

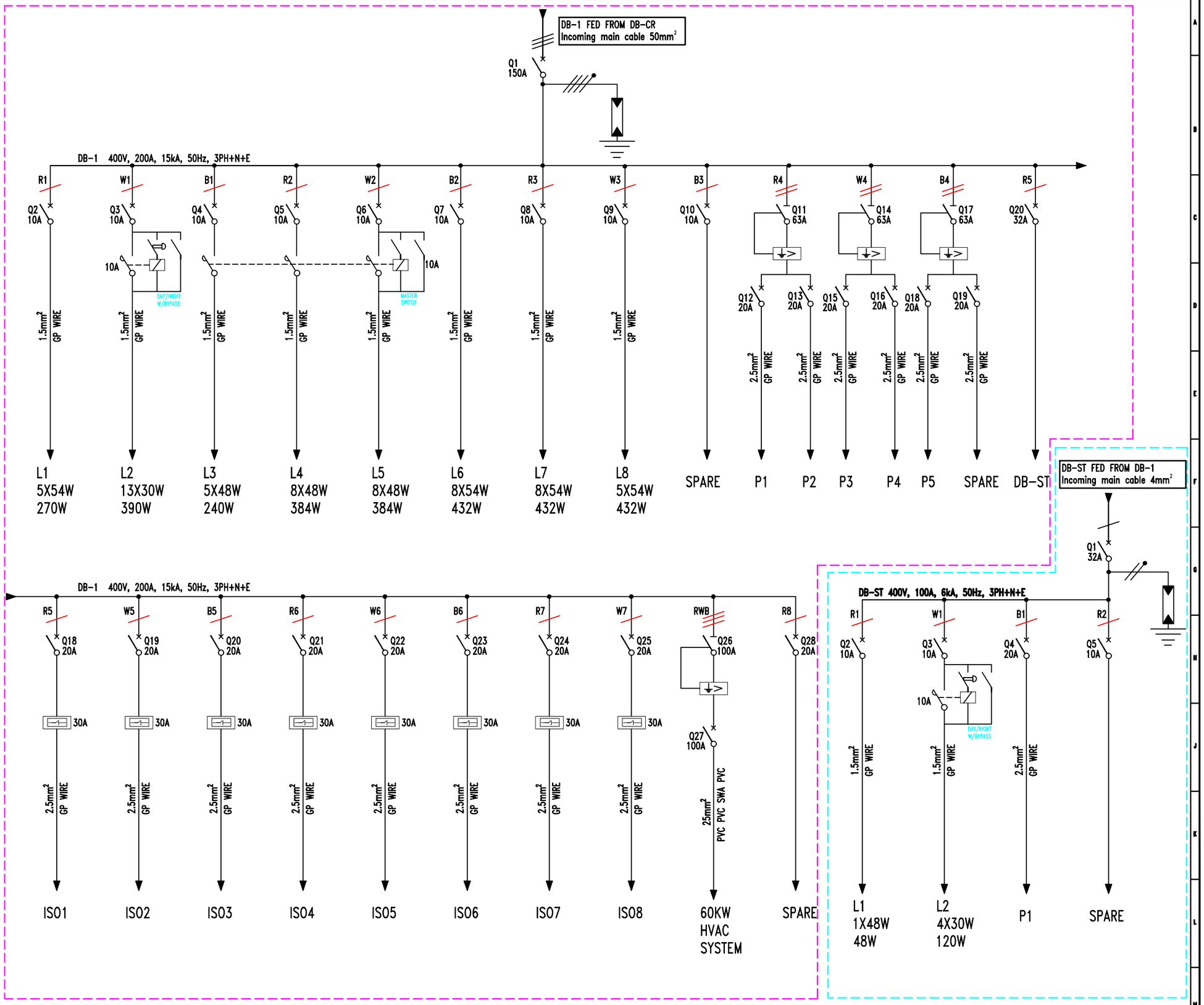

RA	WD-ECH-01-SLD

Notes:

- Standard : SANS 10142-1

REVISIONS

No	DATE	CHECKED	APPROVED	DESCRIPTION

NUMBER	TITLE
REFERENCE DRAWINGS	

CONSULTANT:
CHONAMALANGA ENGINEERING
CHONA-MALANGA ENGINEERING
123 HENDRICK VAN ECK,BLVD
VANDERBIJLPARK, GAUTENG,1911
TEL: 072 746 1080
E-MAIL:Info@chona-malanga.co.za

CONTRACT:		NAME: MW(Tics) Selebano Pr. Eng
DRAWN BY:		Pr. Eng. No.: 20120248
TRACED BY:	HERVE MBIKAYI	SIGNATURE:
	10-04-2025	DATE: 10-04-2025

DESCRIPTION: THE UPGRADING OF WEDELA RECREATIONAL CLUB

PART: EXISTING COMMUNITY HALL SLD

SAP PROJECT No.:		CHECKED BY:	
NETWORK ID No.:		ACCEPTED BY	
CONTRACT:		DATE:	

CLIENT:
KABE MOTIVATED FOR SUCCESS
KABE CONSULTING ENGINEERS
218 Dr VANDER MERWE DRIVE
MONTANA PARK
TEL: 087 809 0982
E-MAIL:Info@kabe.co.za

STATION	WKS	DOC. TYPE	S

SCALE: N.T.S.

RA	WD-ECH-01-SLD	REVISION A

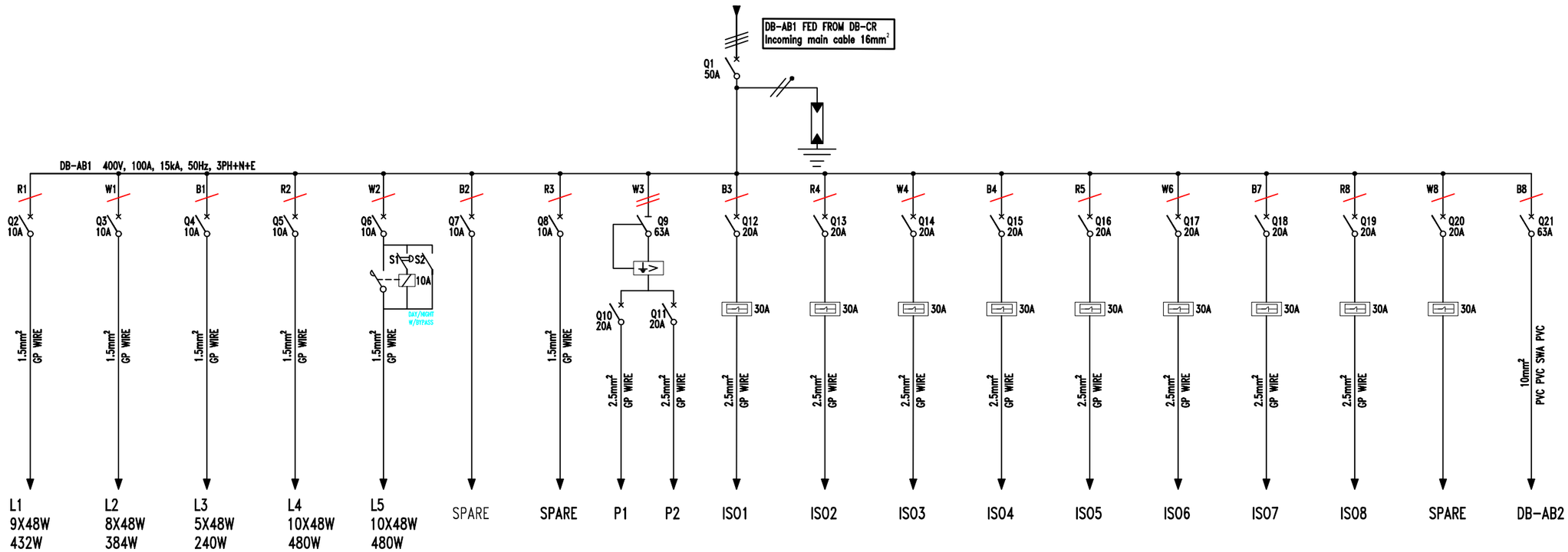

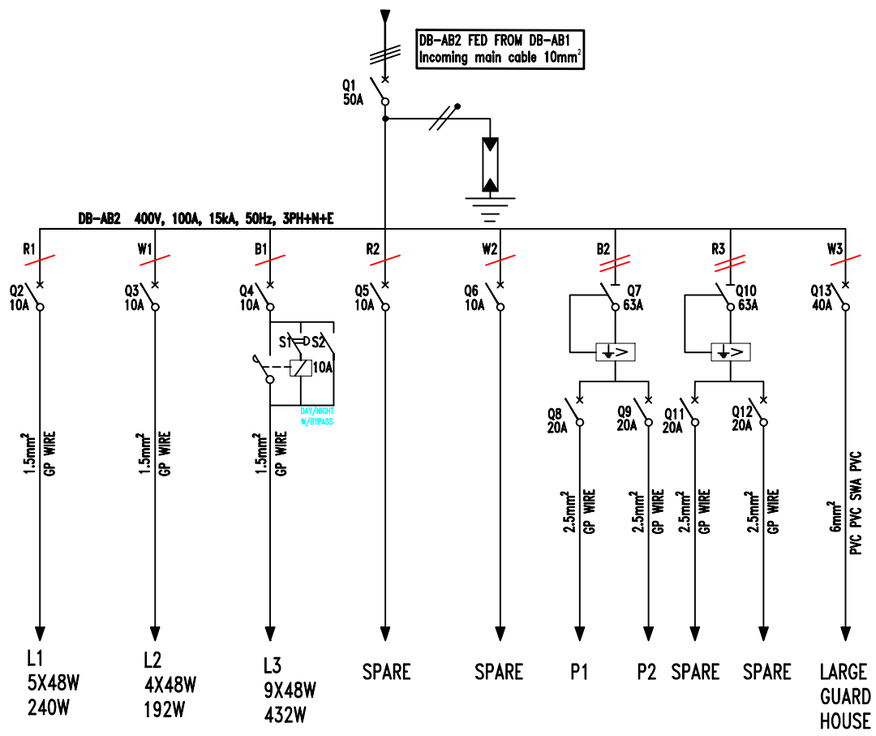

RA	WD-AB-01-SLD

Notes:

- OHS Act 85 of 1993: Environmental Regulation for workplace
- Standard : SANS 10142-1

REVISIONS

No	DATE	CHECKED	APPROVED	DESCRIPTION

NUMBER	TITLE
REFERENCE DRAWINGS	

CONSULTANT:
CHONA-MALANGA ENGINEERING
123 HENDRICK VAN ECK,BLVD
VANDERBIJLPARK, GAUTENG,1911
TEL: 072 746 1080
E-MAIL:info@chona-malanga.co.za

CONTRACT:		NAME: MW(Tics) Selehana Pr. Eng
DRAWN BY:		Pr. Eng. No.: 20120248
TRACED BY:	HERVE MBIKAYI	SIGNATURE:
	28-02-2025	DATE: 28-02-2025

DESCRIPTION: THE UPGRADING OF WEDELA RECREATIONAL CLUB

PART: ABLUTION RETAIL BLOCK SLD

SAP PROJECT No.:		CHECKED BY:	
NETWORK ID No.:		ACCEPTED BY:	
CONTRACT:		DATE:	

CLIENT:
KABE CONSULTING ENGINEERS
218 Dr VANDER MERWE DRIVE
MONTANA PARK
TEL: 087 809 0982
E-MAIL:info@kabe.co.za

STATION	WKS	DOC. TYPE	S

SCALE: N.T.S.

RA	WD-AB-01-SLD	REVISION A

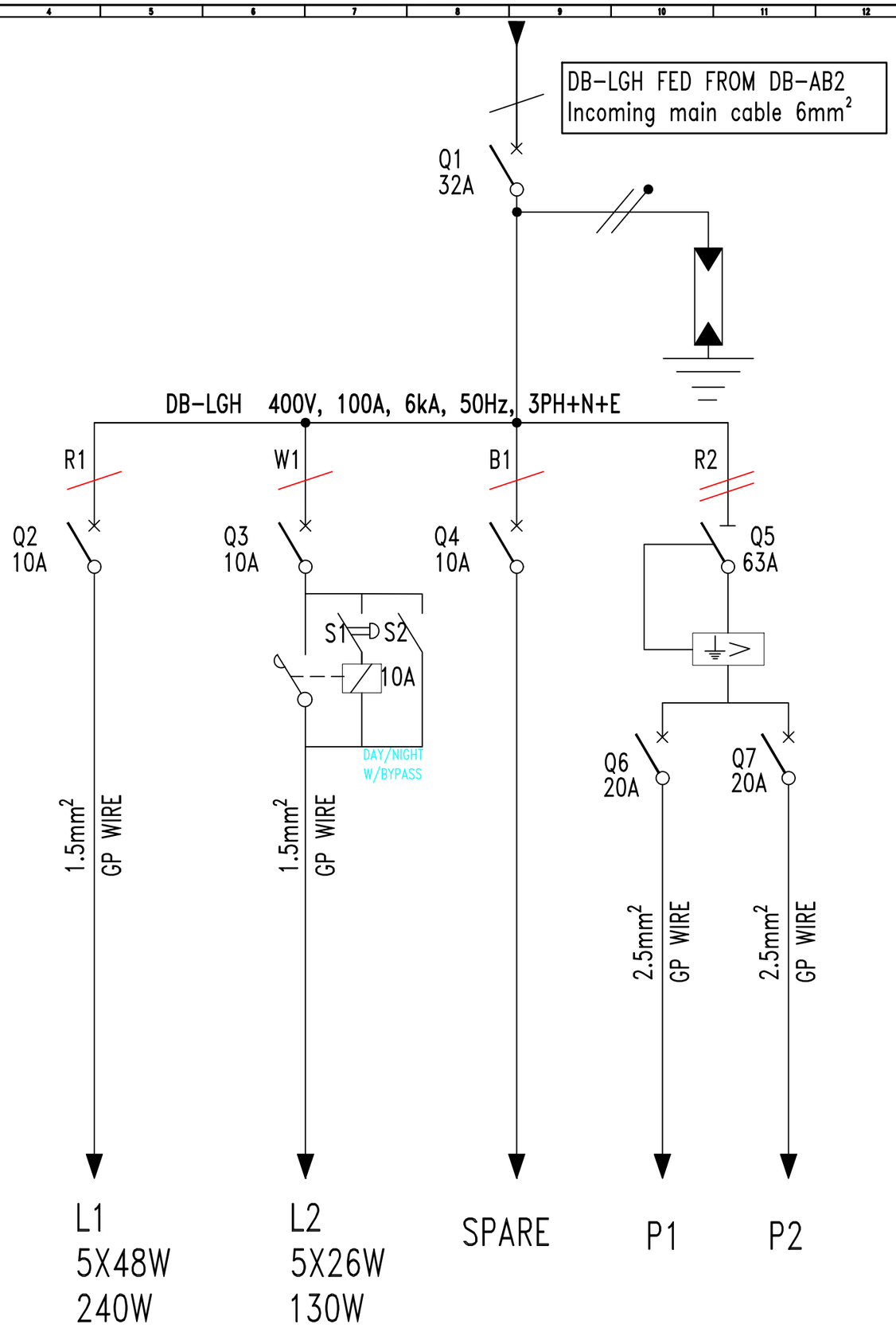

RA | WD-LGH-01-SLD

Notes:

- OHS Act 85 of 1993: Environmental Regulation for workplace
- Standard : SANS 10142-1

REVISIONS

No	DATE	CHECKED	APPROVED	DESCRIPTION

NUMBER	TITLE
REFERENCE DRAWINGS	

CONSULTANT:

CHONA-MALANGA ENGINEERING
123 HENDRICK VAN ECK,BLVD
VANDERBIJLPARK, GAUTENG,1911
TEL: 072 746 1080
E-MAIL:info@chona-malanga.co.za

CONTRACT:		NAME: MW(Tics) Selebano Pr. Eng
DRAWN BY:		Pr. Eng. No.: 20120248
TRACED BY:	HERVE MBIKAYI	SIGNATURE:
	28-02-2025	DATE: 28-02-2025

DESCRIPTION: THE UPGRADING OF WEDELA RECREATIONAL CLUB

PART: LARGE GUARD HOUSE SLD

SAP PROJECT No.:		CHECKED BY:	
NETWORK ID No.:		ACCEPTED BY:	
CONTRACT:		DATE:	

CLIENT:

KABE CONSULTING ENGINEERS
218 Dr VANDER MERWE DRIVE
MONTANA PARK
TEL: 087 809 0982
E-MAIL:info@kabe.co.za

STATION	WKS	DOC. TYPE	S

SCALE: N.T.S.

RA	WD-LGH-01-SLD	REVISION A

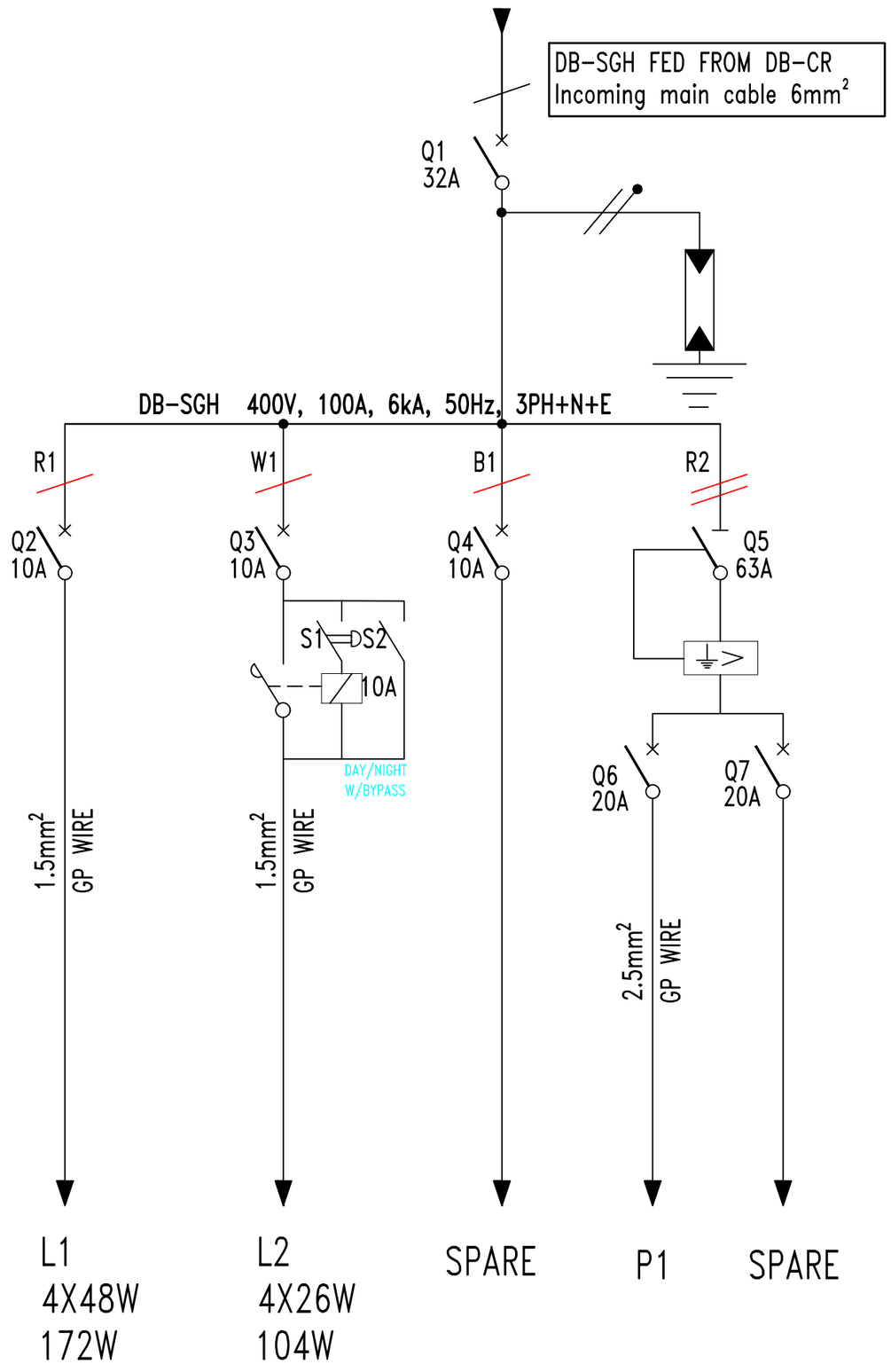

RA | WD-SGH-01-SLD

Notes:

- Standard : SANS 10142-1

REVISIONS

No	DATE	CHECKED	APPROVED	DESCRIPTION

NUMBER	TITLE
	REFERENCE DRAWINGS

CONSULTANT:
CHONAMALANGA ENGINEERING
CHONA-MALANGA ENGINEERING
123 HENDRICK VAN ECK,BLVD
VANDERBIJLPARK, GAUTENG,1911
TEL: 072 746 1080
E-MAIL:Info@chona-malanga.co.za

CONTRACT:		NAME: MW(Tics) Selebano Pr. Eng
DRAWN BY:		Pr. Eng. No.: 20120248
TRACED BY:	HERVE MBIKAYI	SIGNATURE:
	28-02-2025	DATE: 28-02-2025

DESCRIPTION: THE UPGRADING OF WEDELA RECREATIONAL CLUB

PART: SMALL GUARD HOUSE

SAP PROJECT No.:		CHECKED BY:	
NETWORK ID No.:		ACCEPTED BY	
CONTRACT:		DATE:	

CLIENT:
KABE CONSULTING ENGINEERS
218 Dr VANDER MERWE DRIVE
MONTANA PARK
TEL: 087 809 0982
E-MAIL:Info@kabe.co.za

STATION | WKS | DOC. TYPE | S

SCALE: N.T.S.

RA | WD-SGH-01-SLD | REVISION A