Use New version
Add Jumpers

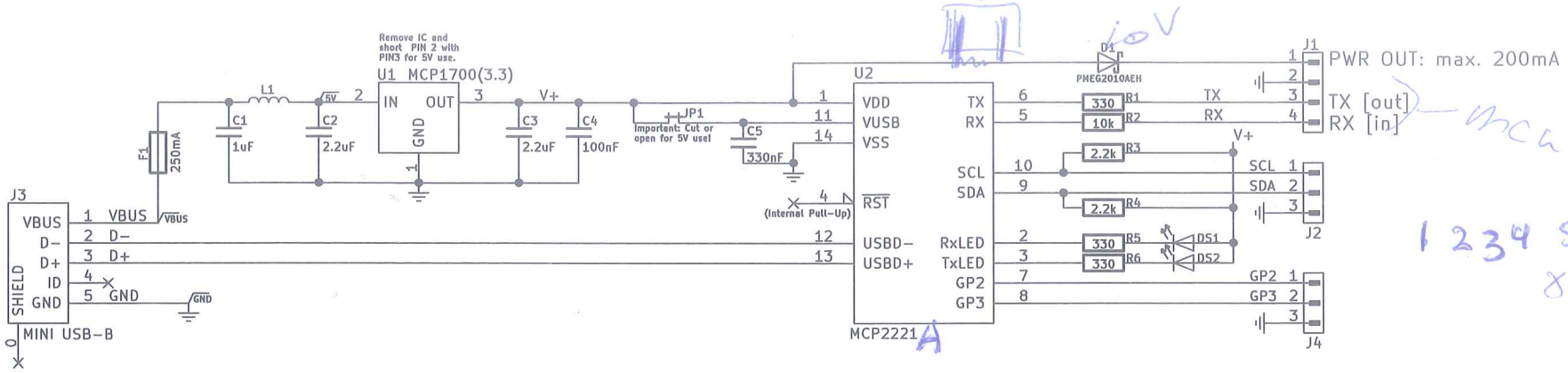

SDA, SCL pull-up resistors may need to be changed depending on requirements:
http://www.nxp.com/documents/user_manual/UM10204.pdf

Official driver/utility software:
http://www.microchip.com/wwwproducts/en/MCP2221

Other software:
https://github.com/zkemble/libmcp2221
for some examples.

Author: Philipp Hof
Electrical and Computer Engineering
University of Canterbury

Sheet: /
File: MCP2221_USB_UART.sch

Title: MCP2221 USB – UART [3.3V, 5V] Bridge 8N1

Size: User	Date: 2016-10-17	Rev: 1
KiCad E.D.A. kicad (5.1.8)-1		Id: 1/1

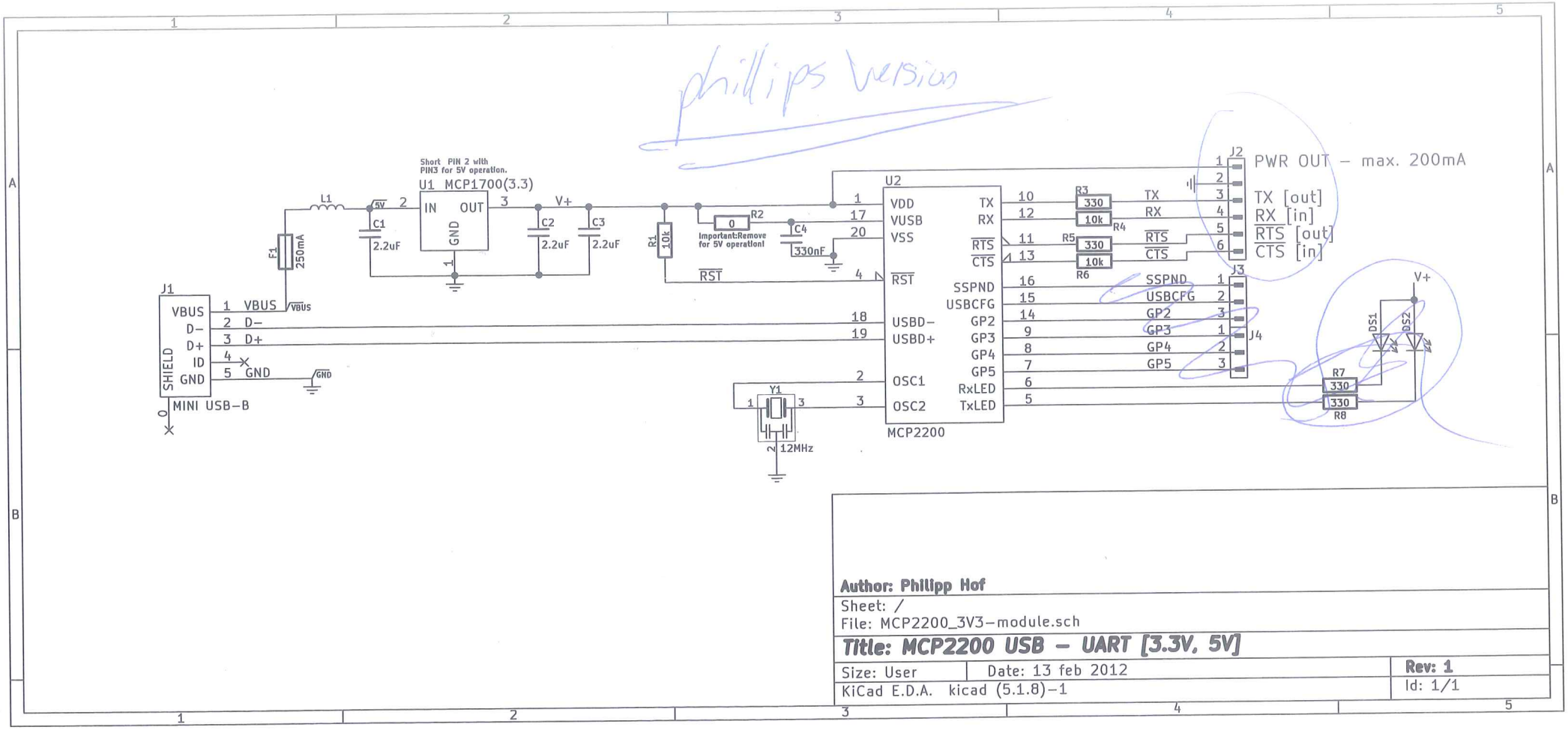

Author: Philipp Hof

Sheet: /

File: MCP2200_3V3-module.sch

Title: MCP2200 USB - UART [3.3V, 5V]

Size: User	Date: 13 feb 2012	Rev: 1
KiCad E.D.A. kicad (5.1.8)-1		Id: 1/1