Micro

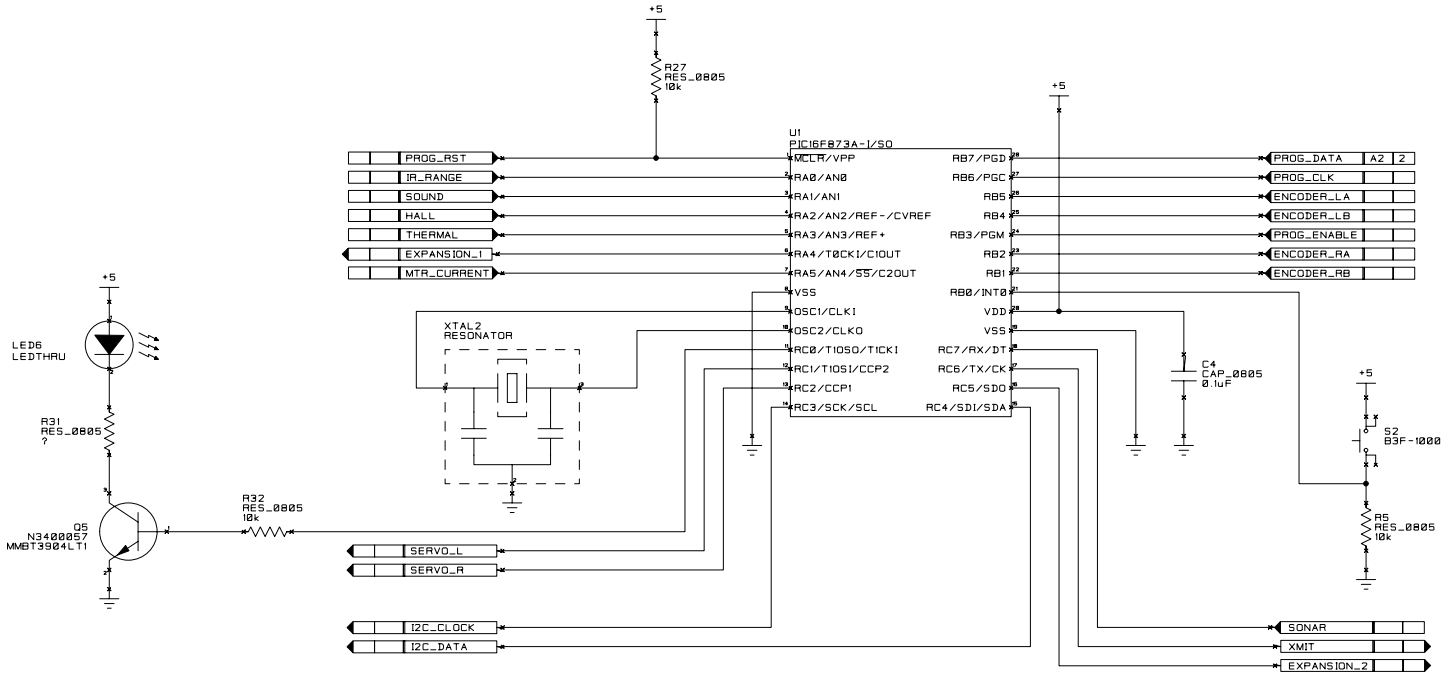
+5
R27
RES_0805
10k
U1
PIC16F873A-I/SO
PROG_RST
IR_RANGE
SOUND
HALL
THERMAL
EXPANSION_1
MTR_CURRENT
MCLR/VPP
RA0/AN0
RA1/AN1
RA2/AN2/REF-/CVREF
RA3/AN3/REF+
RA4/T0CKI/C1OUT
RA5/AN4/SS/C2OUT
VSS
OSC1/CLKI
OSC2/CLKO
RC0/T1OSO/T1CKI
RC1/T1OSI/CCP2
RC2/CCP1
RC3/SCK/SCL
RB7/PGD
RB6/PGC
RB5
RB4
RB3/PGM
RB2
RB1
RB0/INT
VDD
VSS
RC7/RX/DT
RC6/TX/CK
RC5/SDO
RC4/SDI/SDA
PROG_DATA
PROG_CLK
ENCODER_LA
ENCODER_LB
PROG_ENABLE
ENCODER_RA
ENCODER_RB
XTAL2
RESONATOR
C4
CAP_0805
0.1uF
S2
B3F-1000
R5
RES_0805
10k
LED6
LEDTHRU
R31
RES_0805
?
Q5
N3400057
MMBT3904LT1
R32
RES_0805
10k
SERVO_L
SERVO_R
I2C_CLOCK
I2C_DATA
SONAR
XMIT
EXPANSION_2

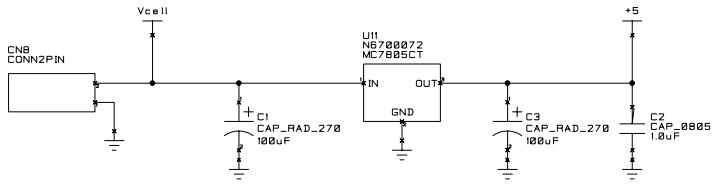
Vcell
CN8
CONN2PIN
U11
N6700072
MC7805CT
IN
OUT
GND
C1
CAP_RAD_270
100uF
C3
CAP_RAD_270
100uF
C2
CAP_0805
1.0uF

Programmer

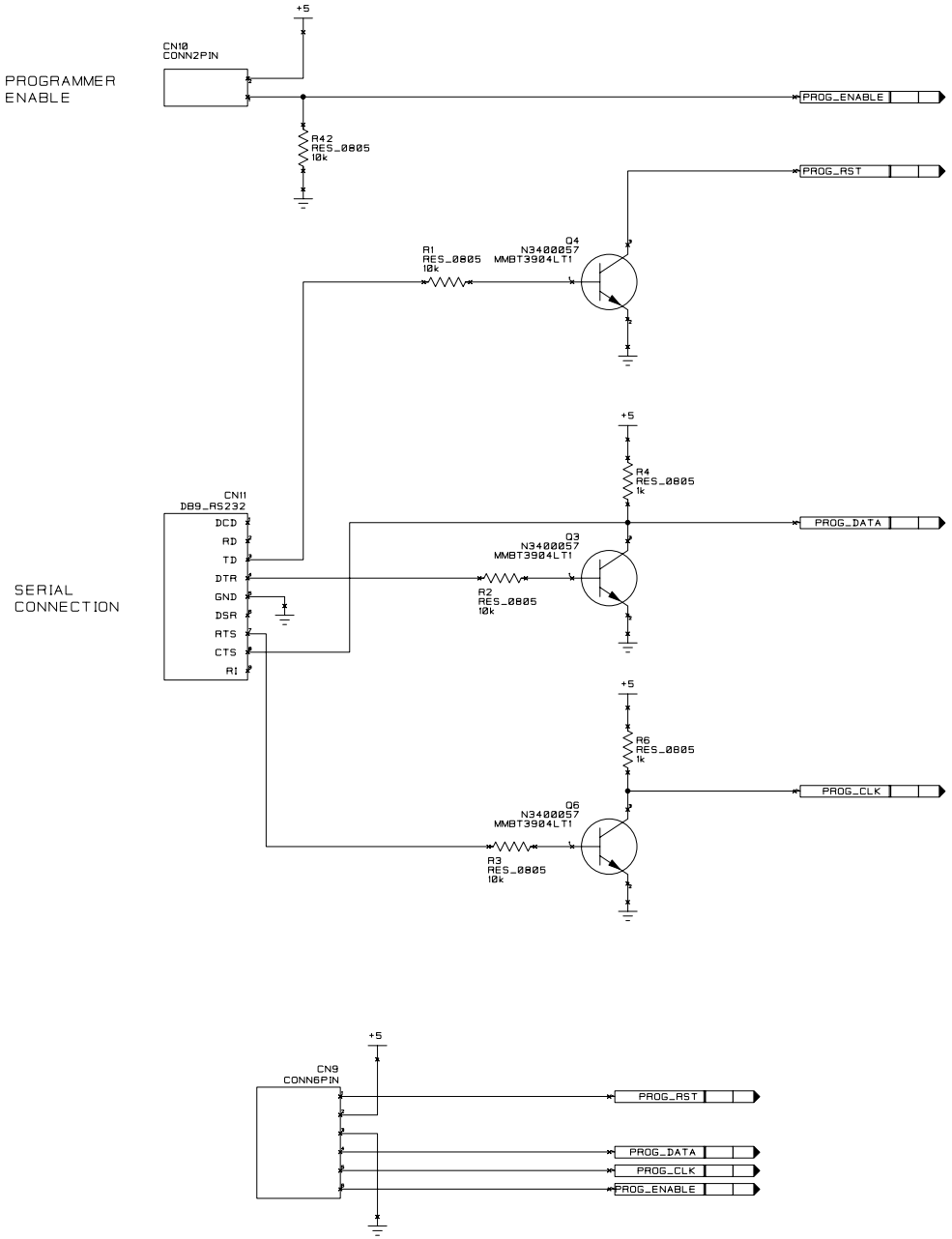
+5
CN10
CONN2PIN
PROGRAMMER
ENABLE
PROG_ENABLE
R42
RES_0805
10k
PROG_RST
Q4
N3400057
MMBT3904LT1
R1
RES_0805
10k
+5
R4
RES_0805
1k
CN11
DB9_RS232
DCD
RD
TD
DTR
GND
DSR
RTS
CTS
RI
PROG_DATA
Q3
N3400057
MMBT3904LT1
SERIAL
CONNECTION
R2
RES_0805
10k
+5
R6
RES_0805
1k
PROG_CLK
Q6
N3400057
MMBT3904LT1
R3
RES_0805
10k
+5
CN9
CONN6PIN
PROG_RST
PROG_DATA
PROG_CLK
PROG_ENABLE

Servo Control and Expansion Port

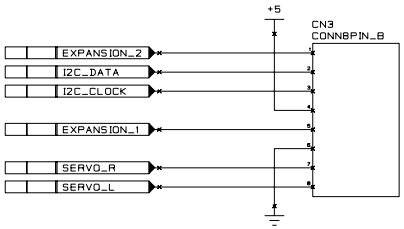

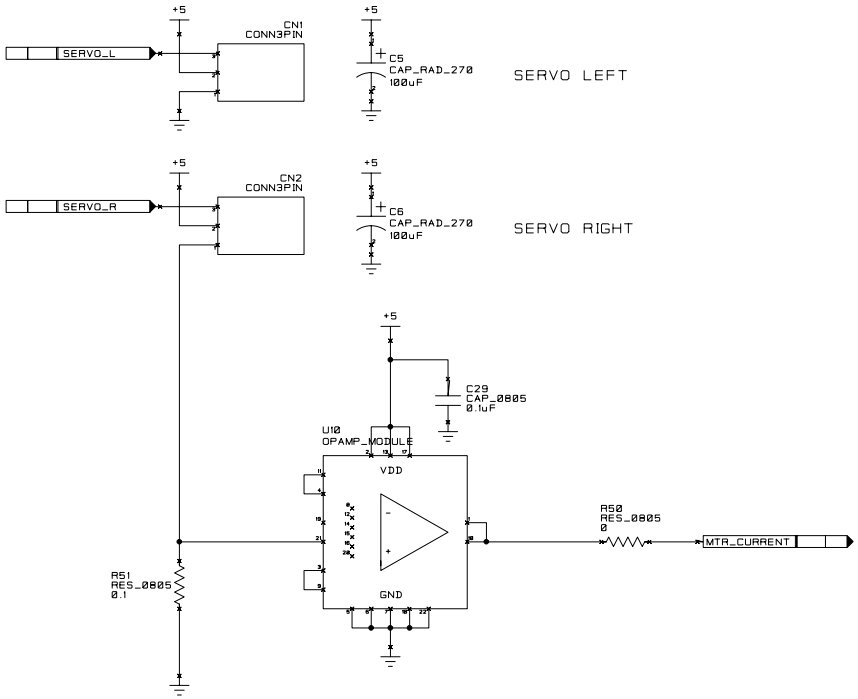

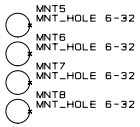

Optical Encoders

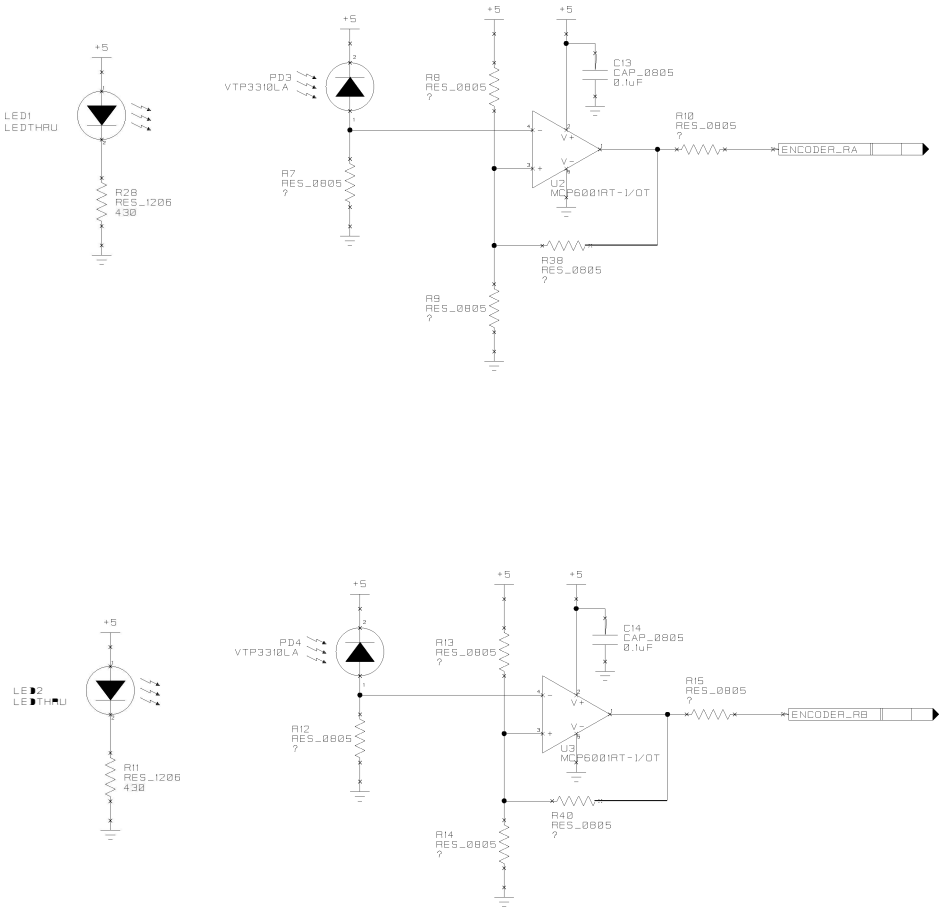

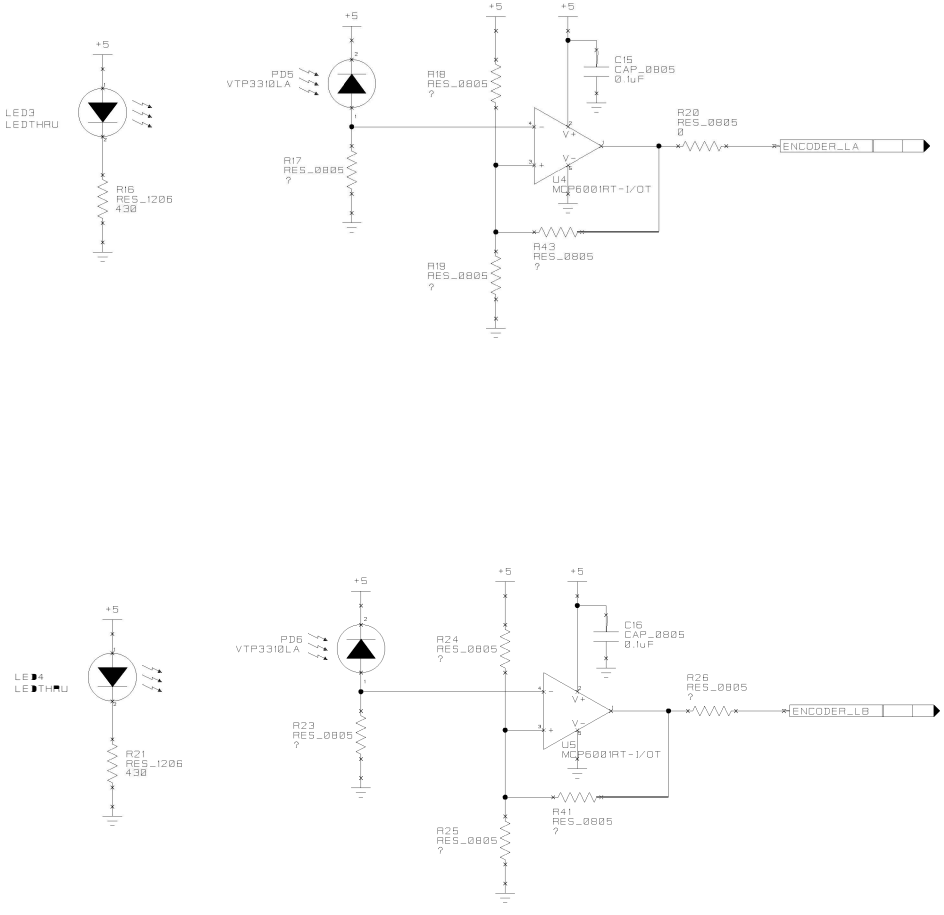

Thermister and Hall Effect

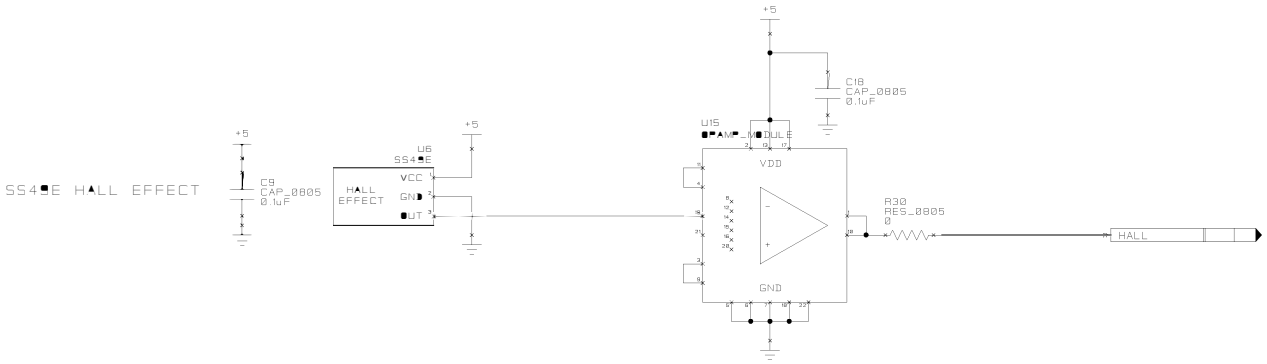

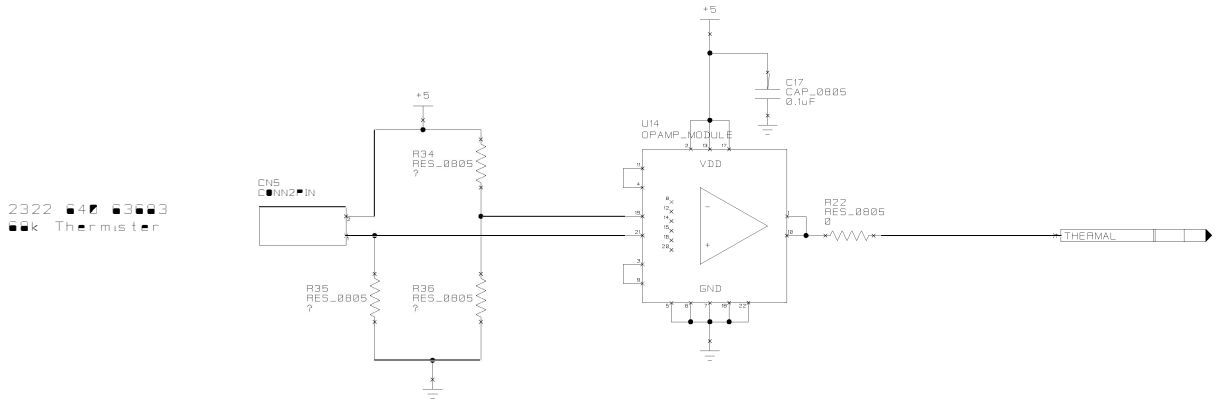

Sound Detection

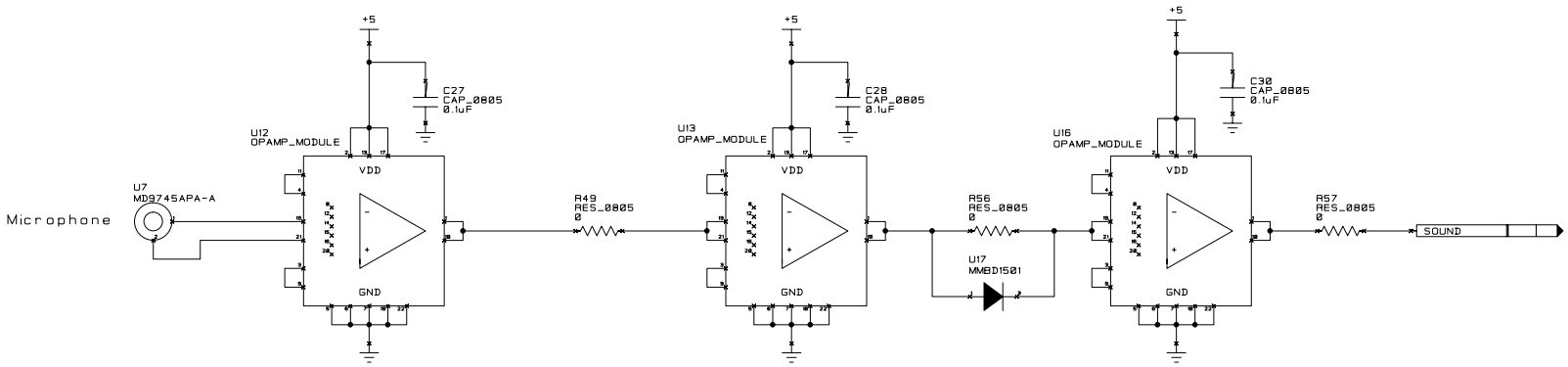

Sonar

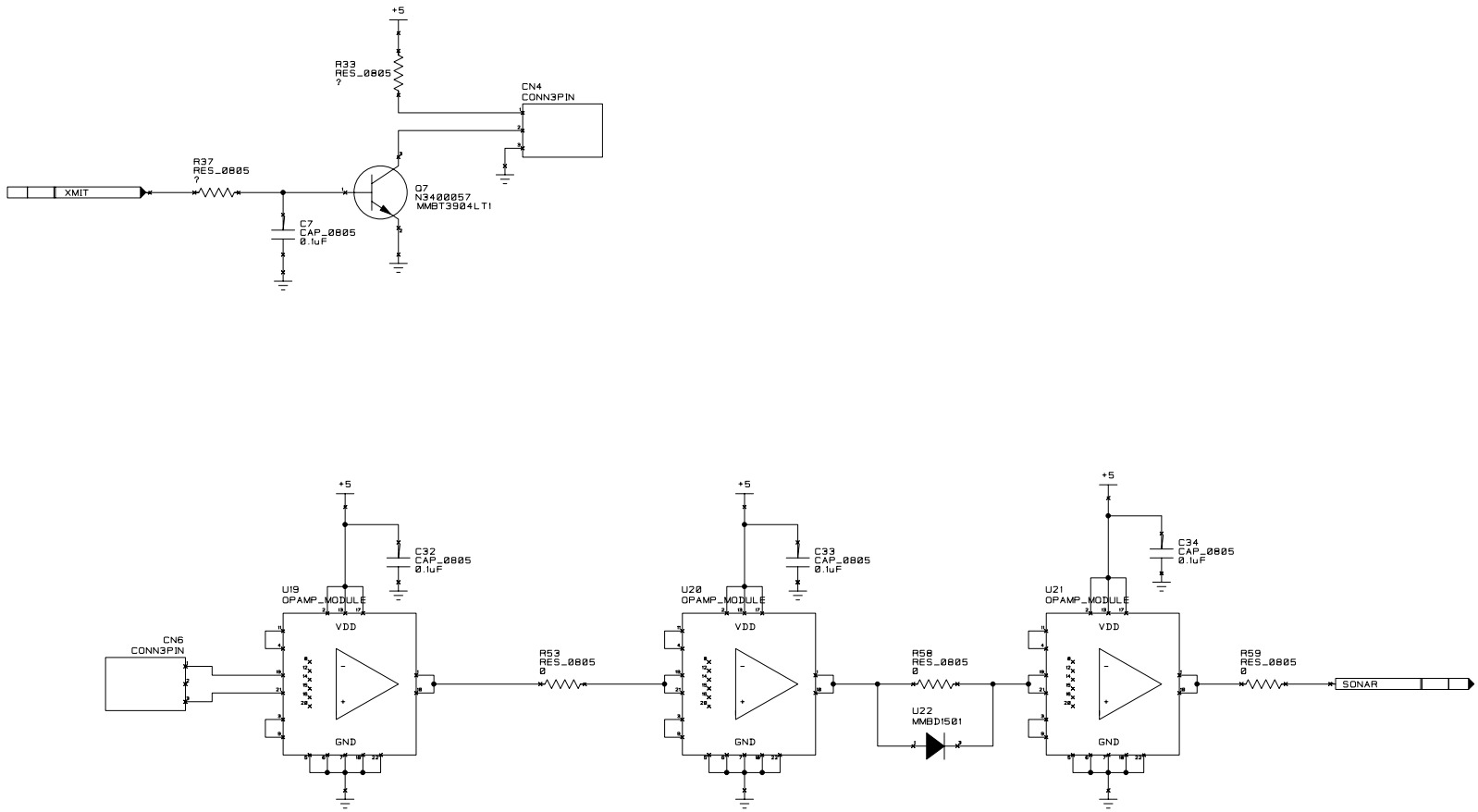
+5
R33
RES_0805
?
CN4
CONN3PIN
R37
RES_0805
?
XMIT
Q7
N3400057
MMBT3904LT1
C7
CAP_0805
0.1uF
+5
C32
CAP_0805
0.1uF
U19
OPAMP_MODULE
VDD
CN6
CONN3PIN
GND
R53
RES_0805
0
+5
C33
CAP_0805
0.1uF
U20
OPAMP_MODULE
VDD
GND
R58
RES_0805
0
U22
MMBD1501
+5
C34
CAP_0805
0.1uF
U21
OPAMP_MODULE
VDD
GND
R59
RES_0805
0
SONAR

Line Following

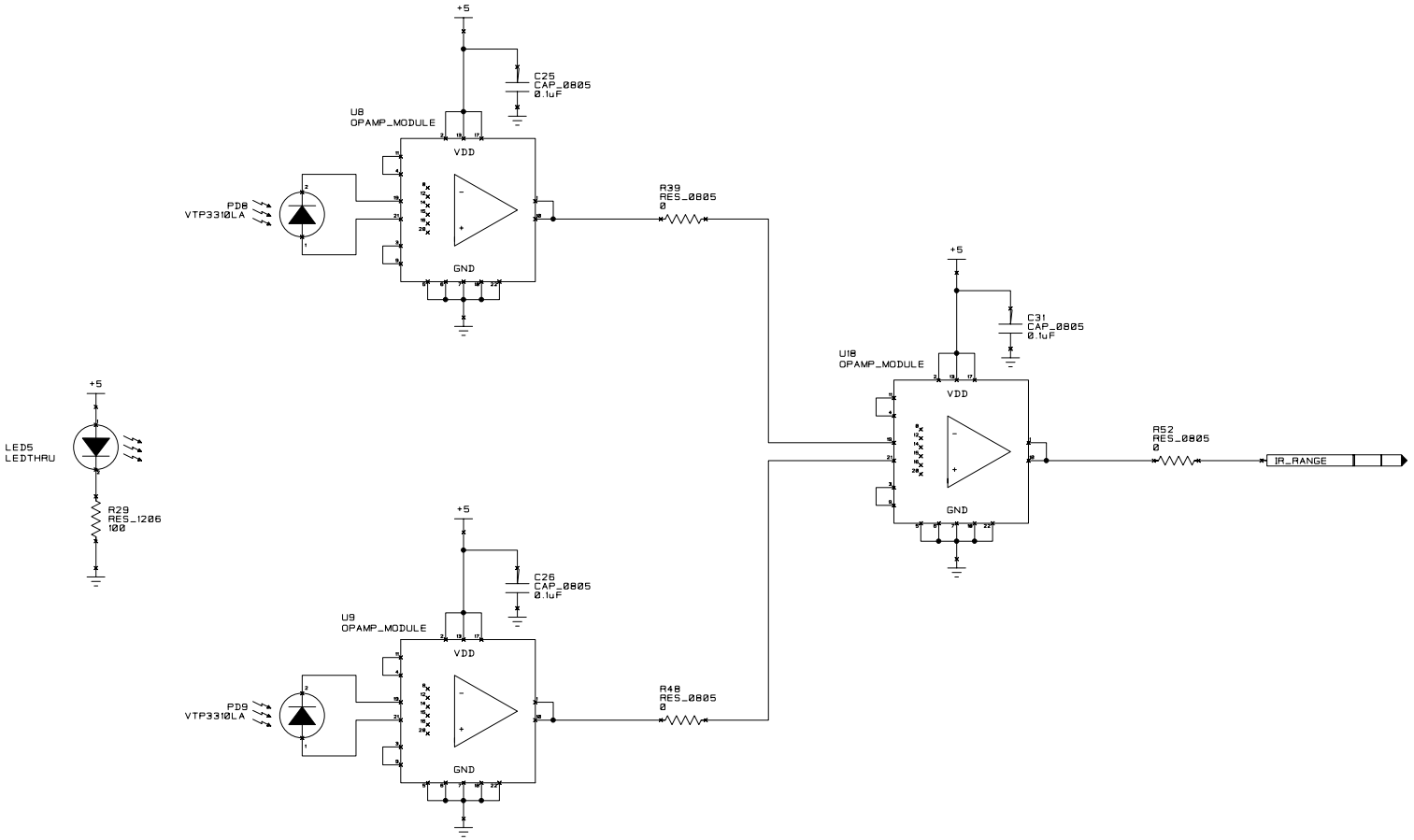

PCB Top

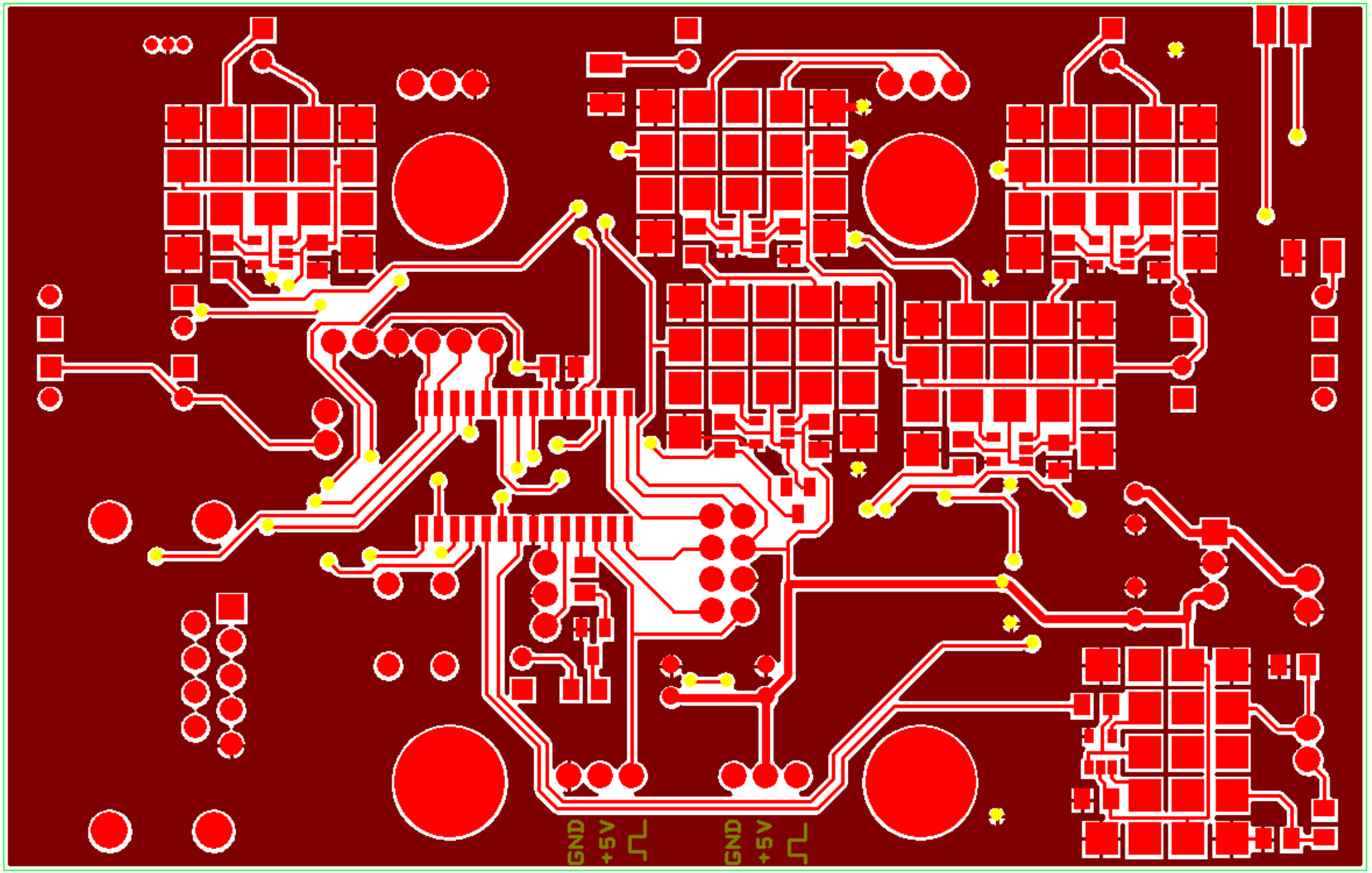

PCB Top

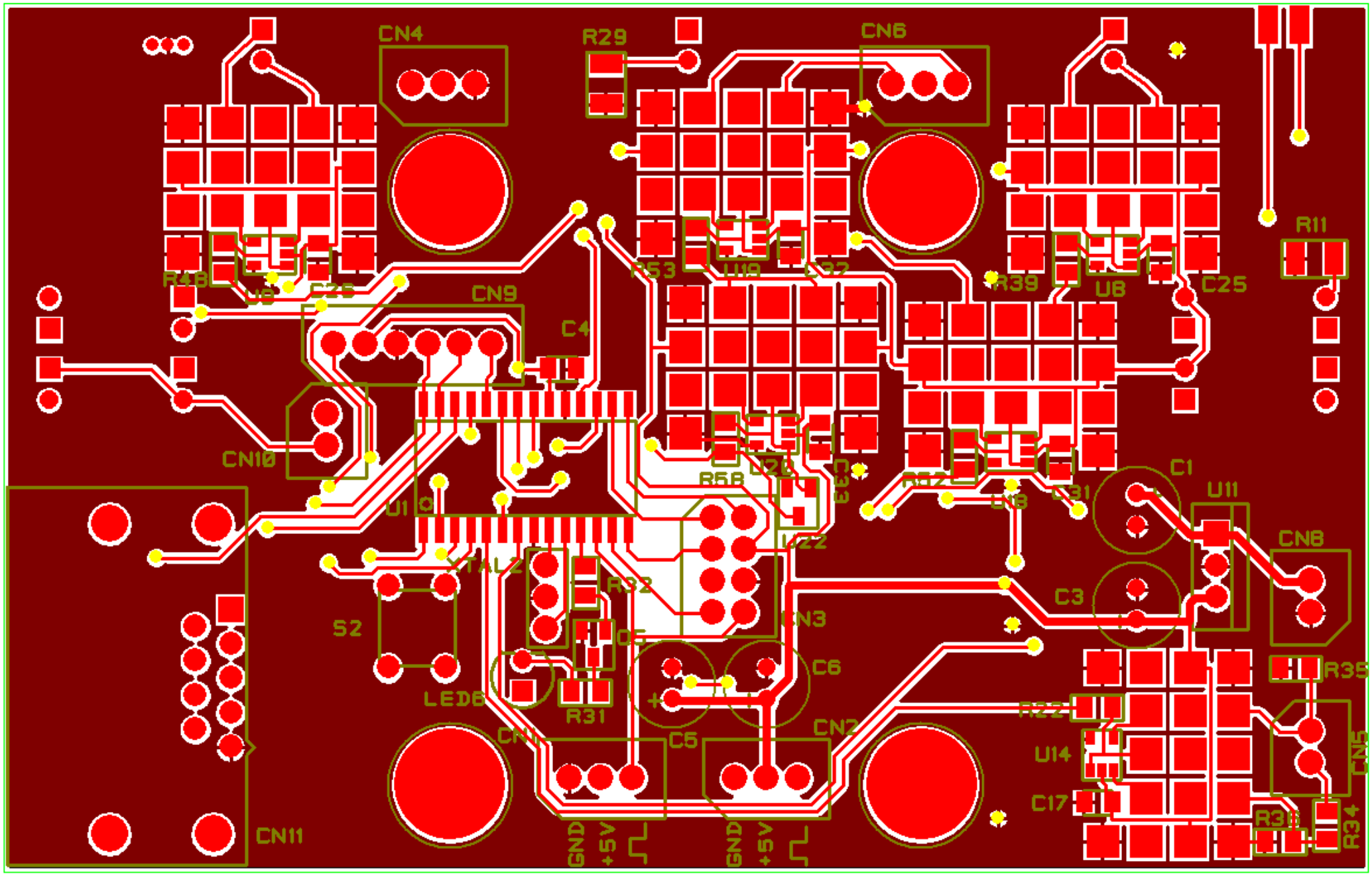

CN4
R29
CN6
R11
R48
U8
C26
CN9
C4
R53
U19
U32
R39
U8
C25
CN10
U1
R58
U20
C33
R52
U18
C31
C1
U11
CN8
U22
XTAL2
R32
C3
S2
CN3
C5
C6
R35
LED6
R31
R22
CN1
C5
CN2
U14
CN5
C17
R31
R34
CN11
GND
+5V
GND
+5V

PCB Bottom (Mirrored)

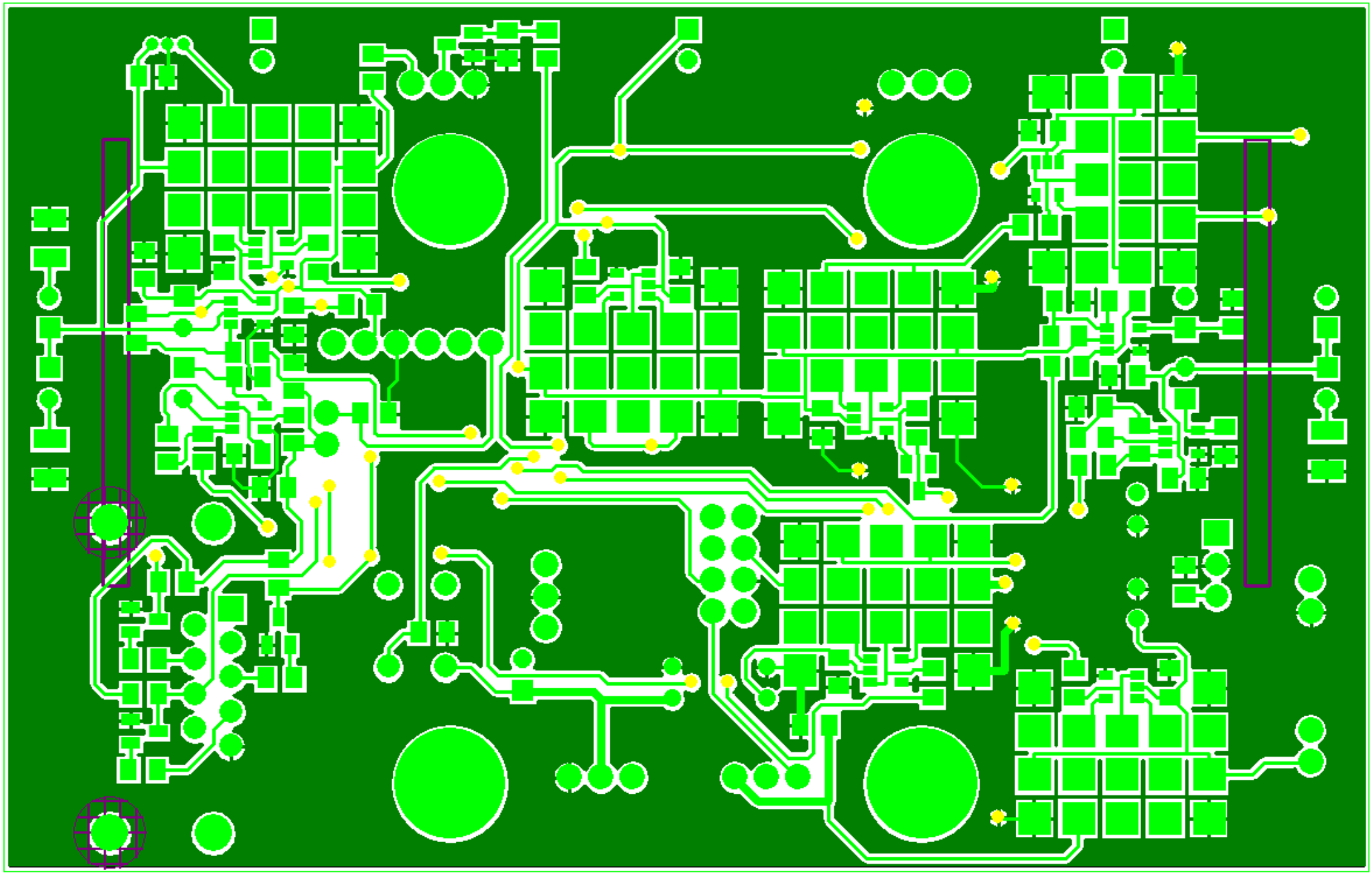

PCB Bottom

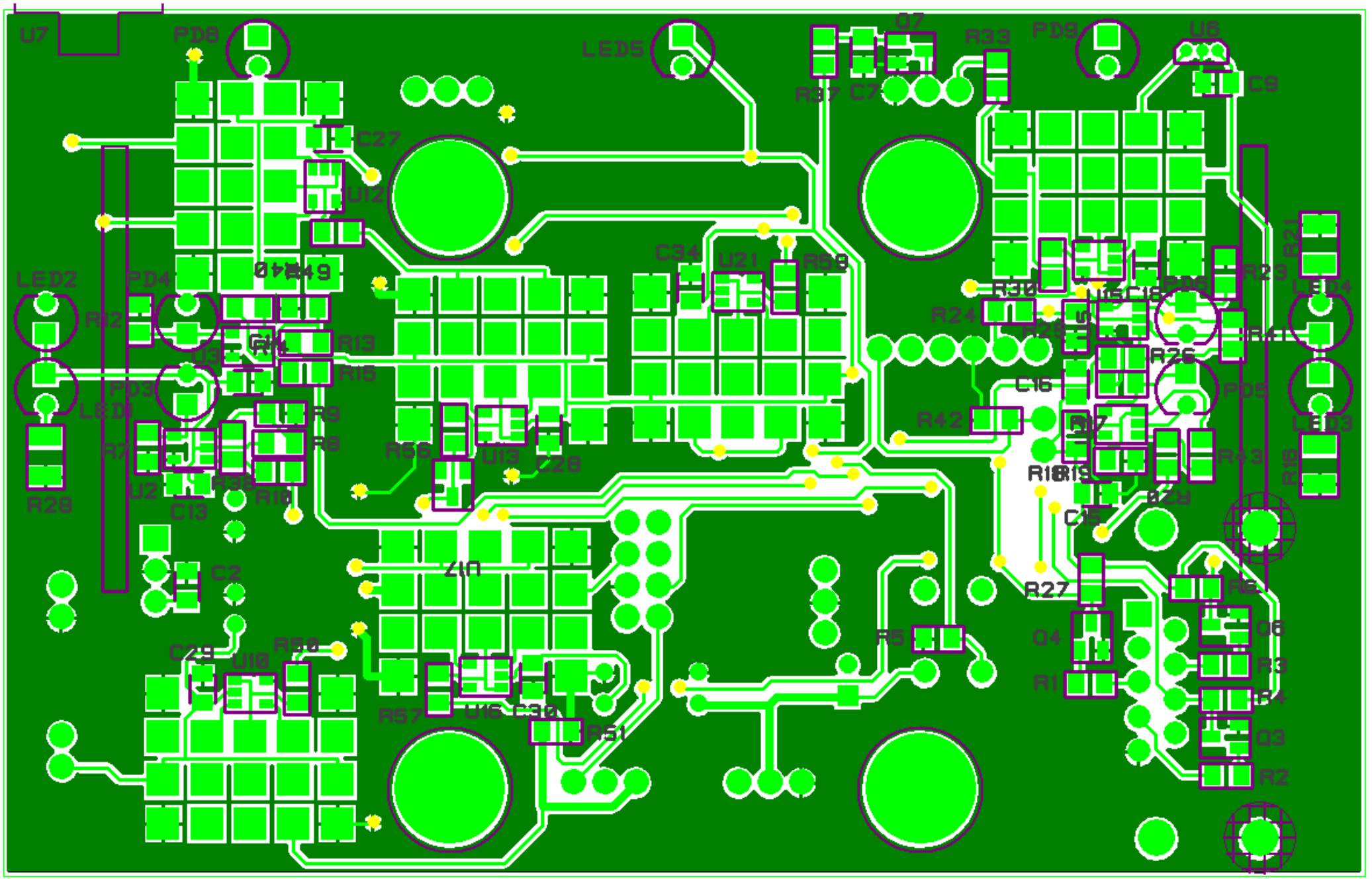
U7
PD8
LED5
Q7
R33
PD9
U6
C9
R37
C7
C27
U12
C34
U21
R58
R21
R23
LED2
PD4
R12
R13
R15
R30
R24
R29
R26
PD5
LED4
LED3
R42
R17
R43
R16
R28
R7
R9
R8
R56
U13
C28
U2
R38
R10
C13
C15
R27
R6
Q6
Q4
R5
R3
R1
R4
Q3
R2
C2
U17
C29
U10
R50
R57
U16
C30
R51