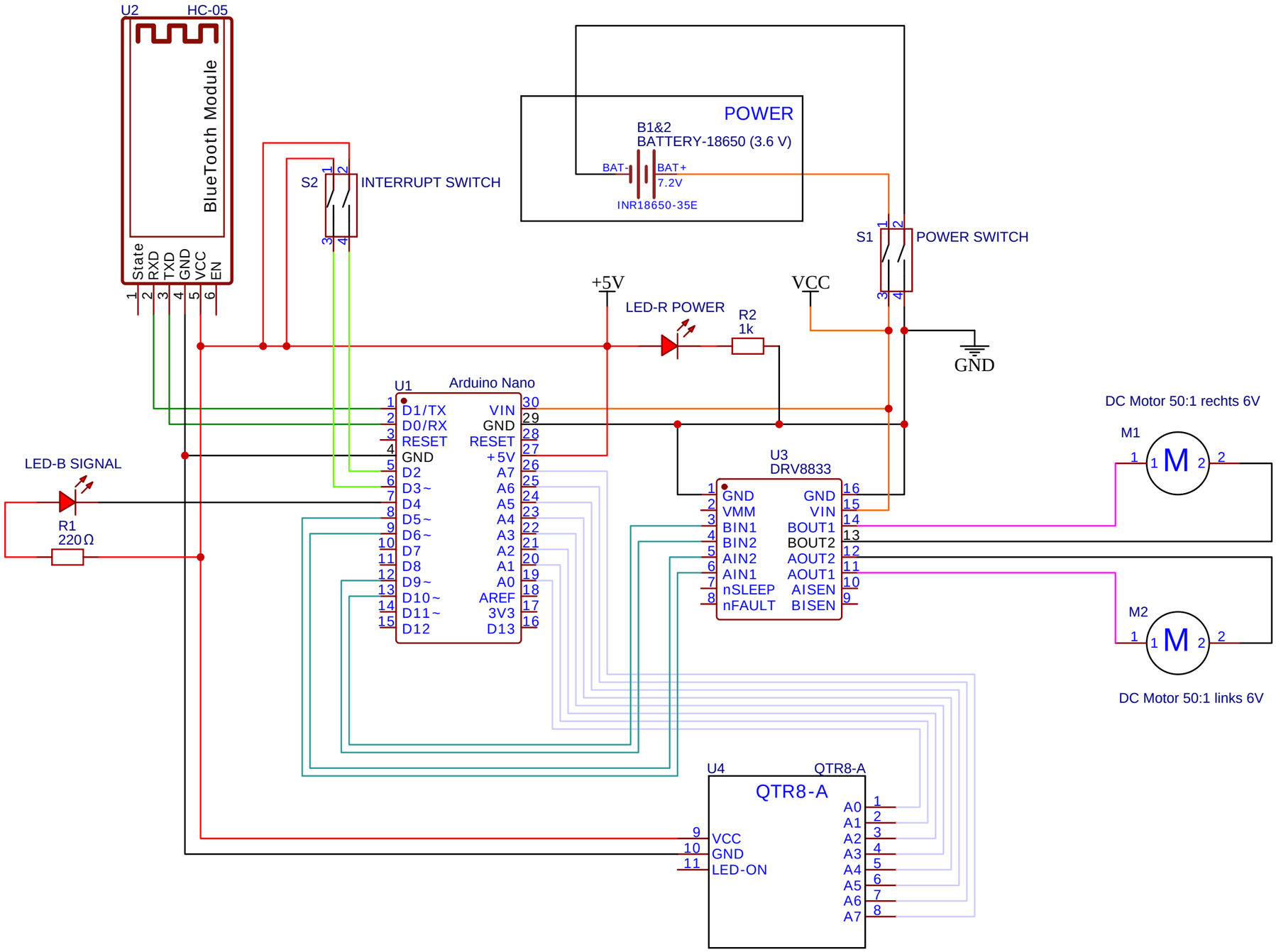

TITLE: Linefollower B	REV: 1.0
EasyEDA — Company: HoGent	Sheet: 1/1
Date: 2024-11-13	Drawn By: Jongsuwan Khan