Trinity AX2

Automated Pallet System for
Small/Medium Vertical Machining Centers

CNC Automation Made Easy

Easy to Install | Easy to Operate | Easy to ROI

Trinity
CNC Automation Made Easy
trinityautomation.com 1-800-762-6864

Trinity AX2

Automated Pallet System for
Small/Medium Vertical Machining Centers

Designed & Built in California

SPECIFICATIONS

- Configurations: AX2-16 / AX2-24
- Max Part Size: Ø16” x 9”H / Ø12” x 9”H (+ Bonus Ø)
- Pallet Locations: 16 / 24
- Robot Capacity: 55 lbs.

FEATURES

- Fanuc M-20iD Robot
- 15” touch screen with Trinity AXPM Software
- Pallet designed for a single clamping module
- Single pallet operator station with rotating receiver
- Complete CNC table setup including:
  - Receiver with a single clamping module
  - Integration onto CNC table
  - Clamp confirmation for pallets
  - Controls package with clamp confirmation detection
  - Blow offs for contact surfaces
- Stainless Steel Chip Bin with Air Blast
- Integrated Fanuc OEM 220 VAC, 3 phase transformer
- System crating and preparation for shipment
- CNC machine integration and auto-door installation
- System installation and operator training (5 days)

AX SERIES KEY BENEFITS

- Optimize high mix CNC production
- Decrease set-up time via stored workholding
- Eliminate idle time between part loads
- Increase spindle utilization
- Maximize the floor space of your shop
- Ensure repeatability with smart workholding & software
- Run unmanned night & weekend shifts
- Easy to use interface

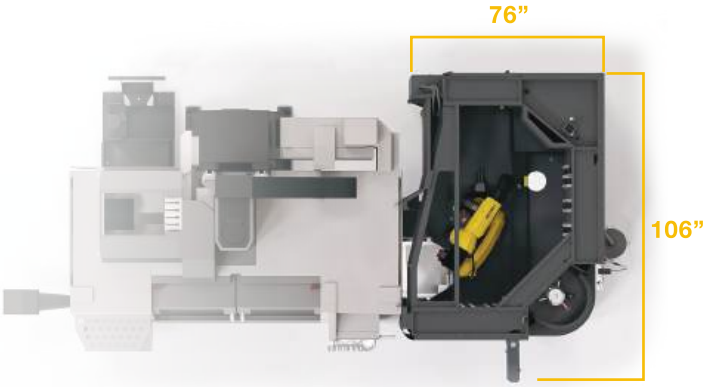

Turn your existing CNC Machining Center into an Automated Production System.

Scan QR Code to Learn More About the Trinity AX Series
Contact us for current CNC compatibility

Trinity
CNC Automation Made Easy
trinityautomation.com 1-800-762-6864