AX5 20

Power and Air Requirements
Power: 220 VAC (3 Phase), 40A
Optional: 480VAC (3 Phase), 20A
Ethernet drop recommended
Air: 90-120 psi to meet or exceed ISO 8573-1: 6 4 4
60 SCFM with hurricane box
1/2" hard or 3/4" flex airline recommended
Power and air requirements are for the AX unit only

Shipping information
Size: 100" x 130" x 115H
Weight: 8,000 lbs

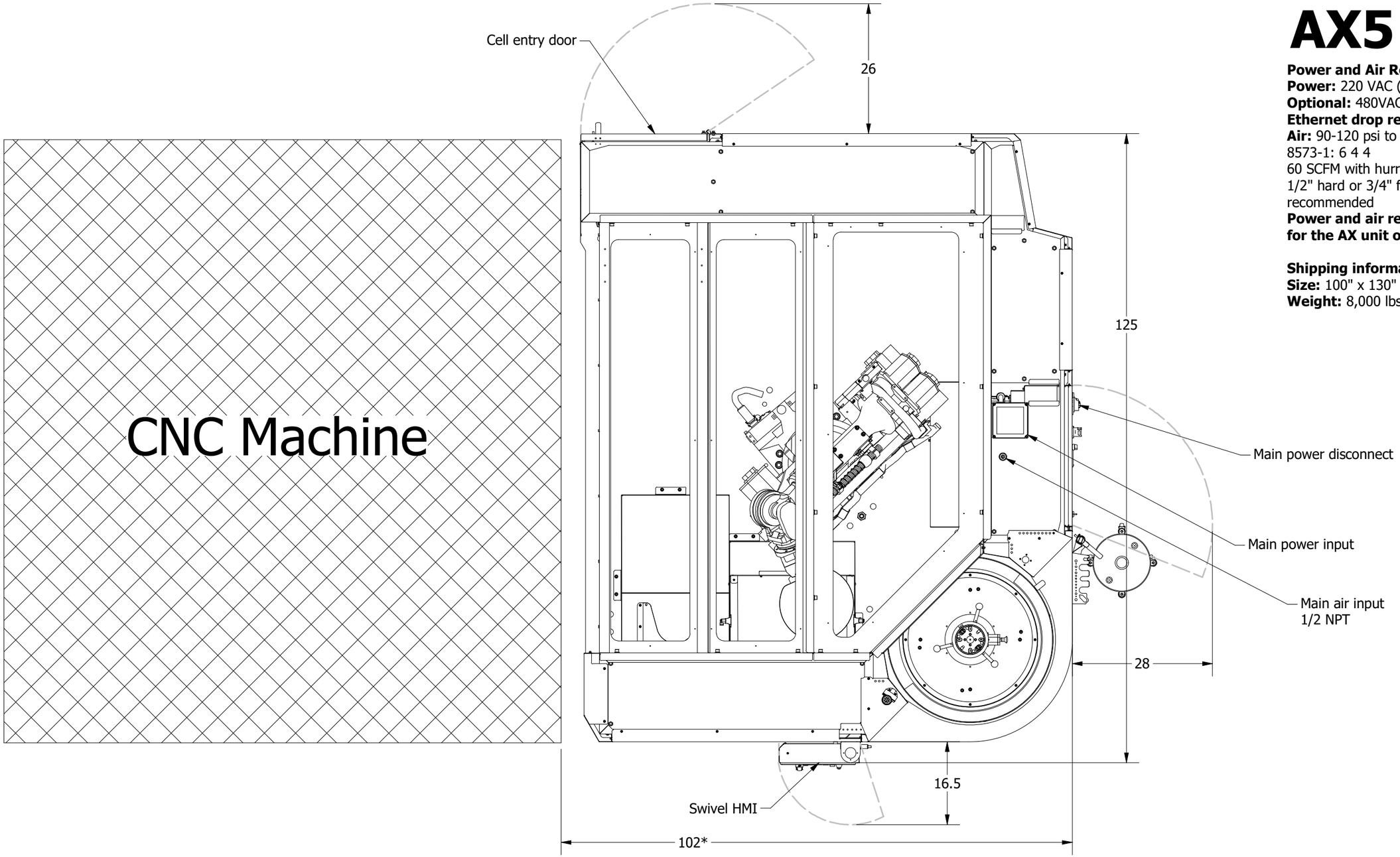

*Dimension may change based on machine model

Model: AX5 20 - Layout

TRINITY ROBOTICS AUTOMATION

Trintiy Robotics Automation
4582 Brickell Privado
Ontario, CA 91761, USA
1-800-762-6864
sales@trinityautomation.com

THE INFORMATION CONTAINED IN THIS DRAWING IS THE SOLE PROPERTY OF TRINITY ROBOTICS AUTOMATION INC. ANY REPRODUCTION IN PART OR AS A WHOLE WITHOUT THE WRITTEN PERMISSION OF TRINITY ROBOTICS AUTOMATION IS PROHIBITED