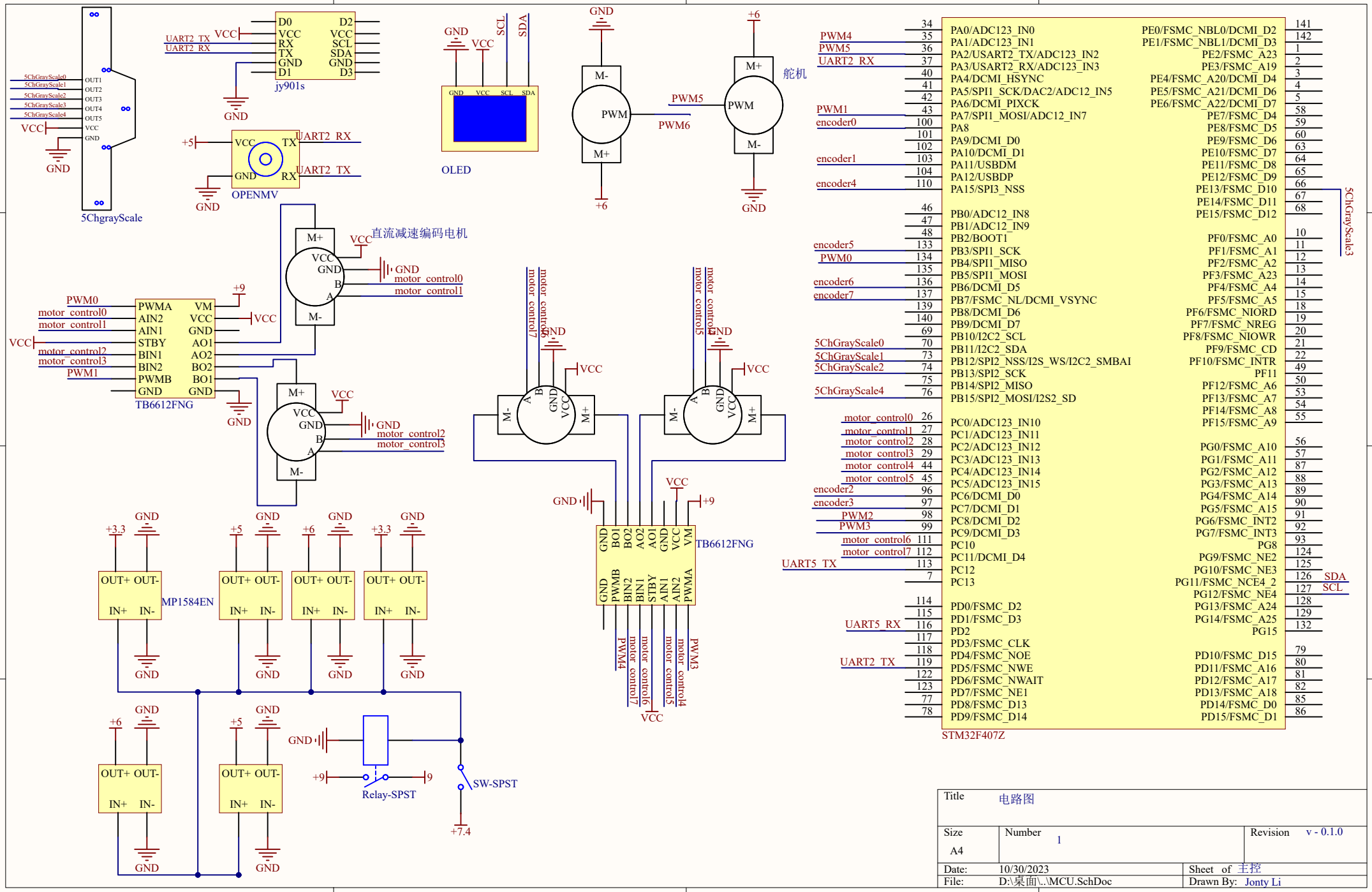

Title	电路图
Size	A4
Number	1
Revision	v - 0.1.0
Date:	10/30/2023
Sheet of	主控
File:	D:\桌面\..\MCU.SchDoc
Drawn By:	Jonty Li