X-Microwave
14000 Summit Drive # 900
Austin, TX 78728
Phone: 512-355-7115
Email: sales@xmicrowave.com
Website: www.xmicrowave.com

XM-B9U5-0909D, ADMV1013SMT

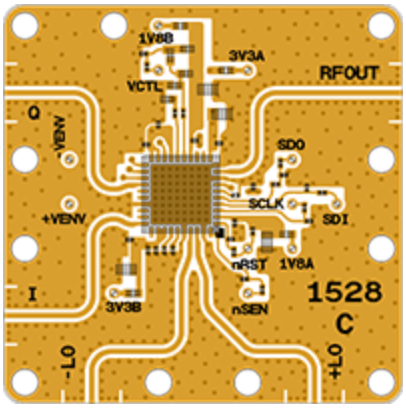

XM-B9U5-0909D
XR-B9U5-0909D ROHS

Upconverter, ADMV1013 [PCB: 1528]
IF to RF
Recommended Bias Controller: XM-B915-0809D-SP

Learn More @ ANALOG DEVICES

Manufacturer Info | Manufacturer Specs | ROHS

Manufacturer Info

Product Page	ADI
Spec Sheet	ADMV1013

Manufacturer Specs

LO Level	0 dBm
LO Low Freq	5400 MHz
LO High Freq	10250 MHz
RF Low Freq	24000 MHz
RF High Freq	44000 MHz
IF Low FreqMixer	0 MHz
IF High Freq	6000 MHz
Gain	18 dB

ROHS

RoHS	XR-B9U5-0909D