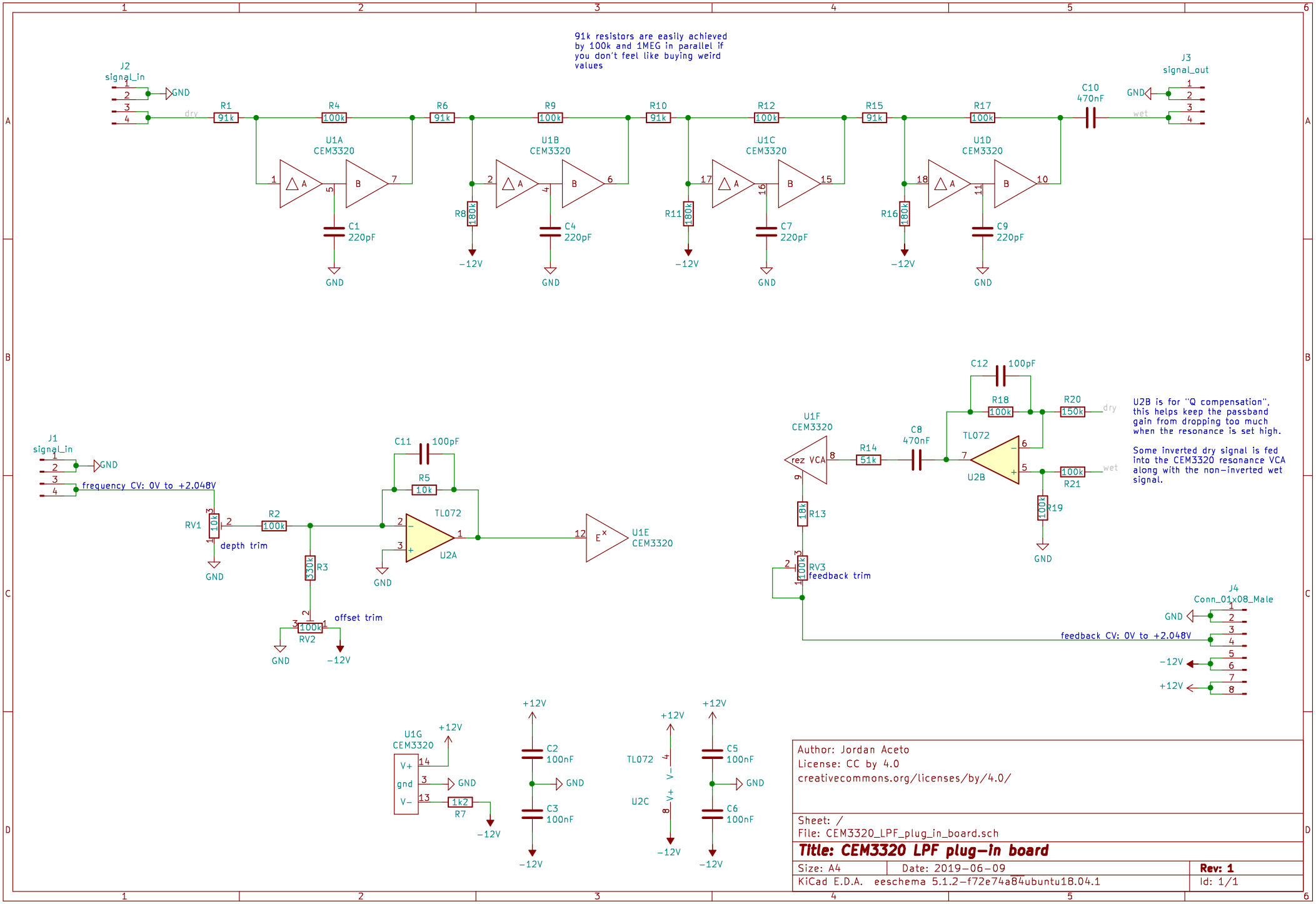

Author: Jordan Aceto
License: CC by 4.0
creativecommons.org/licenses/by/4.0/

Sheet: /
File: CEM3320_LPF_plug_in_board.sch

Title: CEM3320 LPF plug-in board

Size: A4	Date: 2019-06-09	Rev: 1
KiCad E.D.A. eeschema 5.1.2-f72e74a84ubuntu18.04.1		Id: 1/1